(12) INTERNATIONAL APPLICATION PUBLISHED UNDER THE PATENT COOPERATION TREATY (PCT)

(19) World Intellectual Property Organization
International Bureau

(43) International Publication Date
20 June 2019 (20.06.2019)

WIPO | PCT

(10) International Publication Number
WO 2019/117795 A1

(51) International Patent Classification:
G05D 1/02 (2006.01) *B60W 30/16* (2012.01)
B60W 30/10 (2006.01) *B60W 30/18* (2012.01)

(21) International Application Number:
PCT/SE2018/051292

(22) International Filing Date:
12 December 2018 (12.12.2018)

(25) Filing Language: English

(26) Publication Language: English

(30) Priority Data:
1751554-5 15 December 2017 (15.12.2017) SE

(71) Applicant: **SCANIA CV AB** [SE/SE]; 151 87 Södertälje (SE).

(72) Inventors: **HJORTH, Lars**; Flädervägen 13, 146 48 Tullinge (SE). **SKOGHAMMAR, Joel**; Johan Enbergs Väg 19, 171 62 Solna (SE).

(74) Agent: **YOUSSEF, Maikel**; Scania CV AB, 151 87 Södertälje (SE).

(81) Designated States *(unless otherwise indicated, for every kind of national protection available)*: AE, AG, AL, AM, AO, AT, AU, AZ, BA, BB, BG, BH, BN, BR, BW, BY, BZ, CA, CH, CL, CN, CO, CR, CU, CZ, DE, DJ, DK, DM, DO, DZ, EC, EE, EG, ES, FI, GB, GD, GE, GH, GM, GT, HN, HR, HU, ID, IL, IN, IR, IS, JO, JP, KE, KG, KH, KN, KP, KR, KW, KZ, LA, LC, LK, LR, LS, LU, LY, MA, MD, ME, MG, MK, MN, MW, MX, MY, MZ, NA, NG, NI, NO, NZ, OM, PA, PE, PG, PH, PL, PT, QA, RO, RS, RU, RW, SA, SC, SD, SE, SG, SK, SL, SM, ST, SV, SY, TH, TJ, TM, TN, TR, TT, TZ, UA, UG, US, UZ, VC, VN, ZA, ZM, ZW.

WO 2019/117795 A1

(54) **Title:** METHOD AND CONTROL ARRANGEMENT FOR ARRANGING DRIVING ORDER OF A PLATOON

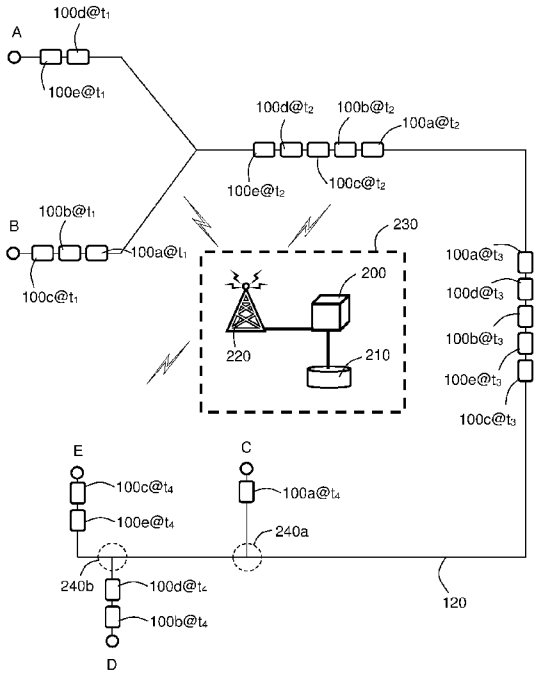

Fig. 2

(57) **Abstract:** Method (700) and control arrangement (200) of a platoon (110), for arranging driving order of vehicles (100a, 100b, 100c, 100d, 100e) organised in the platoon (110) during conveyance from a starting point (A, B) to a destination (C, D, E). The method (700) comprises obtaining (701) information of the vehicles (100a, 100b, 100c, 100d, 100e) in the platoon (110); deter- mining (702) the driving order of the vehicles (100a, 100b, 100c, 100d, 100e), based on the obtained (701) information; setting (703) a sequential order for sorting vehicles (100a, 100b, 0c, 100d, 100e) of the platoon (110) into the determined (702) driving order; and arranging (704) the vehicles (100a, 100b, 100c, 100d, 100e) in the determined (702) driving order by ordering the vehicles (100a, 100b, 100c, 100d, 100e) to change positions according to the set (703) sequential order.

[Continued on next page]

(84) Designated States *(unless otherwise indicated, for every kind of regional protection available)*: ARIPO (BW, GH, GM, KE, LR, LS, MW, MZ, NA, RW, SD, SL, ST, SZ, TZ, UG, ZM, ZW), Eurasian (AM, AZ, BY, KG, KZ, RU, TJ, TM), European (AL, AT, BE, BG, CH, CY, CZ, DE, DK, EE, ES, FI, FR, GB, GR, HR, HU, IE, IS, IT, LT, LU, LV, MC, MK, MT, NL, NO, PL, PT, RO, RS, SE, SI, SK, SM, TR), OAPI (BF, BJ, CF, CG, CI, CM, GA, GN, GQ, GW, KM, ML, MR, NE, SN, TD, TG).

Published:

— *with international search report (Art. 21(3))*

METHOD AND CONTROL ARRANGEMENT FOR ARRANGING DRIVING ORDER OF A PLATOON

TECHNICAL FIELD

This document discloses a method and a control arrangement. More particularly, a method and a control arrangement are described, for arranging driving order of vehicles organised in the platoon during conveyance from a starting point to a destination.

BACKGROUND

Grouping vehicles into platoons is an emerging technology, leading to reduced fuel consumption and increased capacity of the roads. Further, the active driving/ working time of involved drivers may be reduced; and/ or the number of drivers may be reduced, leading to reduced transportation costs. A number of vehicles, e.g. 2-25 or more, may be organised in a platoon or vehicle convoy, wherein the vehicles are driving in coordination after each other with only a small distance between the vehicles, such as some decimetres or some meters, such as e.g. 20 meters. Thereby air resistance is reduced, which is important for reducing energy consumption, in particular for trucks, busses and goods vehicles or other vehicles having a large frontal area. In principle it may be said that the shorter the distance is between the vehicles, the lower the air resistance becomes, which reduces energy consumption for the vehicle platoon.

The distance between the vehicles in the platoon may be reduced as the vehicles are enabled to communicate wirelessly with each other and thereby coordinate their velocity by e.g. accelerating or braking co-ordinately/ simultaneously. Thereby the reacting distance needed for human reaction during normal driving is eliminated.

Platooning brings a multitude of advantages, such as improved fuel economy due to reduced air resistance, and also reduced traffic congestion leading to increased capacity of the roads and enhanced traffic flow. On long distance routes vehicles could be unattended for most of the time whilst in following mode, giving the driver (if any) an opportunity to rest and be well rested when leaving the platoon for the final destination, which potentially leads to less traffic incidents; or alternatively to completely leave the vehicle. Further, it may not be required to stop the vehicle in order for the driver to rest, leading to a reduced transportation time (this may require modified law regulation concerning driving times, breaks and rest periods for drivers of vehicles in a platoon).

However, there are also several problems involved when forming the platoon. For example,

different vehicles comprised in the platoon may have different final destinations, leading to that the platoon may be dissolved when these vehicles leave. In case some of the vehicles are not manned, the whole platoon may have to guide the departing vehicles to their final destination and then continue to the next destination, which is suboptimal.

For arranging the vehicles in a platoon formation, a large parking lot or similar area, situated close to the highway, is required. It also presents a potential hazard to form the platoon in such place, as it becomes difficult for the driver of the first vehicle to see what is occurring at the end of the platoon.

Furthermore, vehicles or a sub-platoon comprising various vehicles is/ are sometimes added to the platoon during transportation. The vehicles then either has to stop and wait for each other at a parking lot or similar area, or form the platoon on the road while driving. In the latter case, the order of the vehicles may not be optimal, from several viewpoints.

Also, the vehicles in the platoon may not share the same characteristics. They may for example have different weight, and/ or different Power-to-weight ratio, different rolling resistance, their engines may require gear shift at different speed, the time for making the gear shift (leaving the vehicle in a temporal state without torque) may be different etc.

Thereby, the optimal driving methodology or strategy, perhaps in particular when driving in hilly terrain, may be different for different vehicles.

In case the first vehicle in the platoon is an unloaded vehicle, it may hardly be affected at all by the uphill, while a heavily loaded following vehicle may not be able to maintain the desired speed, which may lead to that the platoon dissolves. When the vehicles then drive downhill, the heavily loaded following vehicle may have to brake and thereby lose energy.

Another problem in particular for platoons comprising a large number of vehicles driving in hilly terrain is that the vehicles are in different states of inclination in all times, except when the road is horizontal.

For example, in case of uphill driving followed by a downhill, a single vehicle is normally releasing the accelerator when approaching the hill peak in order to roll over the peak and downhill without any driving torque in the powertrain of the vehicle. Thereby fuel is saved. However, when a platoon is driving in the same hilly environment (uphill followed by downhill) and the first vehicle of the platoon is approaching the hill peak, the following vehicles are still driving uphill and need to accelerate in order to overcome the hill. In case the first vehicle of

the platoon releases the accelerator when approaching the hill peak, the following vehicles will have to brake away energy in order to keep the distance to the forward vehicle. A following vehicle in the platoon which may be in the beginning of the uphill, may after the brake be required to change gears, leading to further lost velocity during the time of the gear change. The vehicle then has to speed up for reducing the gap to the forward vehicle, causing also the behind vehicle to speed up etc. Such inconsequent braking and acceleration will increase the fuel consumption of the vehicles in the platoon substantially.

The reversed problem may appear in the opposite situation when the first vehicle in the platoon starts driving downhill and increase speed due to gravity while the following vehicle may be driving on plain ground, or uphill and thus the following vehicle has to accelerate in order to keep the time gap, just for start braking some seconds later.

Thereby energy is unnecessarily wasted. Also, the brakes are excessively used, which may lead to early replacement due to wear, i.e. increased maintenance costs.

As these described scenarios, and similar variants of them, will lead to increased fuel consumption, it is desirable to find a solution in order to achieve the advantages of platoon driving.

SUMMARY

It is therefore an object of this invention to solve at least some of the above problems and improve platooning.

According to a first aspect of the invention, this objective is achieved by a control arrangement of a platoon. The control arrangement aims at arranging driving order of vehicles organised in the platoon during conveyance from a starting point to a destination. The control arrangement is configured to obtain information of the vehicles in the platoon. Further, the control arrangement is also configured to determine the driving order of the vehicles, based on the obtained information. In addition, the control arrangement is configured to set a sequential order for sorting vehicles of the platoon into the determined driving order. Also, the control arrangement is configured to arrange the vehicles in the determined driving order by ordering the vehicles to change positions according to the set sequential order.

According to a second aspect of the invention, this objective is achieved by a method in a control arrangement of a platoon. The method aims at arranging driving order of vehicles organised in the platoon during conveyance from a starting point to a destination. Further, the method also comprises obtaining information of the vehicles in the platoon. In addition,

the method furthermore comprises determining the driving order of the vehicles, based on the obtained information. The method also comprises setting a sequential order for sorting vehicles of the platoon into the determined driving order. Also, the method further comprises arranging the vehicles in the determined driving order by ordering the vehicles to change positions according to the set sequential order.

Thanks to the described aspects, by collecting information from vehicles of the platoon, the order of the vehicles within the platoon may be arranged, based on the collected information. Hereby, various problems may be solved, for example changing manned leading vehicle of the platoon without stopping based on driving time reports, which saves transportation time and also increases safety of the platoon as the platoon does not need to be stationary which reduces the risk of stolen goods, and also personal safety as it is hard for the driver of the first vehicle of the platoon to see people around vehicles at the end of the platoon (a distance that may be e.g. 100 meters or more).

Further, different vehicle orders within the platoon may be optimal at different segments of the route. Thus, vehicle rearrangement may be triggered at certain points along the route in order to reduce fuel consumption, and/ or in order to change active driver (in the leading vehicle of the platoon).

Hereby, also the time required for extra drivers is minimised or at least reduced. Further, vehicles may be arranged within the platoon based on respective vehicle destination, thereby facilitating a smooth departure of a sub-platoon from the main platoon. Also, vehicles may be arranged, in particular in hilly terrain, based on weight and/ or acceleration capacity, leading to reduced total cost for the transportation, due to reduced fuel consumption. Thereby platooning is improved.

Other advantages and additional novel features will become apparent from the subsequent detailed description.

FIGURES

Embodiments of the invention will now be described in further detail with reference to the accompanying figures, in which:

Figure 1 illustrates vehicles organised in a platoon according to an embodiment of the invention;

Figure 2 illustrates vehicles of a platoon at four different moments in time, according to an embodiment of the invention;

Figure 3A illustrates a platoon according to an embodiment of the invention;

Figure 3B illustrates a platoon according to an embodiment of the invention;

Figure 4 illustrates a platoon driving in a hilly environment according to an embodiment of the invention;

Figure 5A illustrates a platoon and a vehicle departing from the platoon according to an embodiment of the invention;

Figure 5B illustrates a platoon and a vehicle departing from the platoon according to an embodiment of the invention;

Figure 5C illustrates a platoon and a vehicle connecting to the platoon according to an embodiment of the invention;

Figure 6A illustrates a vehicle interior of a vehicle in a platoon according to an embodiment of the invention;

Figure 6B illustrates a vehicle interior of a vehicle in a platoon according to an embodiment of the invention;

Figure 7 is a flow chart illustrating an embodiment of a method according to an embodiment;

Figure 8 is an illustration depicting a system according to an embodiment.

DETAILED DESCRIPTION

Embodiments of the invention described herein are defined as a method and control arrangement, which may be put into practice in the embodiments described below. These embodiments may, however, be exemplified and realised in many different forms and are not to be limited to the examples set forth herein; rather, these illustrative examples of embodiments are provided so that this disclosure will be thorough and complete.

Still other objects and features may become apparent from the following detailed description, considered in conjunction with the accompanying drawings. It is to be understood, however, that the drawings are designed solely for purposes of illustration and not as a definition of the limits of the herein disclosed embodiments, for which reference is to be made to the appended claims. Further, the drawings are not necessarily drawn to scale and, unless otherwise indicated, they are merely intended to conceptually illustrate the structures and procedures described herein.

Figure 1 illustrates a scenario with a multitude of vehicles **100a, 100b, 100c**, driving in a

driving direction **105**, with a certain inter-vehicular distance organised in a platoon **110**, driving on a road **120**.

The vehicle platoon 110 may be described as a group of coordinated, inter-communicating vehicles 100a, 100b, 100c travelling at given inter-vehicular distances and velocity.

The inter-vehicular distances may be fixed or variable in different embodiments. Thus the distances may be e.g. some centimetres, some decimetres, some meters or some tenths of meters in some embodiments. Alternatively, each vehicle 100a, 100b, 100c in the vehicle formation 110 may have a different distance to the vehicle following, or leading, vehicle 100a, 100b, 100c, than all other vehicles 100a, 100b, 100c in the coordinated vehicle platoon 110.

The vehicles 100a, 100b, 100c may comprise e.g. a truck or similar motor vehicle designed to transport cargo. Also, or alternatively, the vehicles 100a, 100b, 100c may comprise multi-passenger vehicles such as a bus, a coach or any similar vehicle or other means of conveyance such as a truck or a car etc., or other similar means of conveyance.

The vehicles 100a, 100b, 100c in the platoon 110 may comprise vehicles of the same, or different types in different embodiments.

The vehicles 100a, 100b, 100c may be driver controlled or driverless autonomously controlled vehicles in different embodiments. However, for enhanced clarity, the vehicles 100a, 100b, 100c are subsequently described as having a driver, at least in the leading vehicle 100a.

The vehicles 100a, 100b, 100c in the platoon 110 may be coordinated via wireless signal. Such wireless signal may comprise, or at least be inspired by wireless communication technology such as Wi-Fi, Wireless Local Area Network (WLAN), Ultra Mobile Broadband (UMB), Bluetooth (BT), Near Field Communication (NFC), Radio-Frequency Identification (RFID), optical communication such as Infrared Data Association (IrDA) or infrared transmission to name but a few possible examples of wireless communications in some embodiments.

In some embodiments, the communication between vehicles 100a, 100b, 100c in the platoon 110 may be performed via vehicle-to-vehicle (V2V) communication, e.g. based on Dedicated Short-Range Communications (DSRC) devices. DSRC works in 5.9 GHz band with bandwidth of 75 MHz and approximate range of 1000 m in some embodiments.

The wireless communication may be made according to any IEEE standard for wireless vehicular communication like e.g. a special mode of operation of IEEE 802.11 for vehicular networks called Wireless Access in Vehicular Environments (WAVE). IEEE 802.11p is an extension to 802.11 Wireless LAN medium access layer (MAC) and physical layer (PHY) specification.

The communication may alternatively be made over a wireless interface comprising, or at least being inspired by radio access technologies such as e.g. 3GPP LTE, LTE-Advanced, E-UTRAN, UMTS, GSM, GSM/ EDGE, WCDMA, Time Division Multiple Access (TDMA) networks, Frequency Division Multiple Access (FDMA) networks, Orthogonal FDMA (OFDMA) networks, Single-Carrier FDMA (SC-FDMA) networks, Worldwide Interoperability for Microwave Access (WiMax), or Ultra Mobile Broadband (UMB), High Speed Packet Access (HSPA) Evolved Universal Terrestrial Radio Access (E-UTRA), Universal Terrestrial Radio Access (UTRA), GSM EDGE Radio Access Network (GERAN), 3GPP2 CDMA technologies, e.g., CDMA2000 1x RTT and High Rate Packet Data (HRPD), or similar, just to mention some few options, via a wireless communication network.

In some embodiments, when the vehicles 100a, 100b, 100c in the platoon 110 are coordinated and are communicating, the driver of the first vehicle 100a may actively drive the own vehicle 100a, while the other vehicles 100b, 100c in the platoon 110 may merely be following the driving commands of the first vehicle 100a in some embodiments.

Some, or even all of the vehicles 100a, 100b, 100c may be driverless (i.e. autonomously controlled) in some embodiments; for example, the leading vehicle 100a may be manned with a human driver while the other vehicles 100b, 100c in the platoon 110 may be autonomous in some embodiments.

Figure 2 illustrates a scenario with a platoon 110 comprising five vehicles 100a, 100b, 100c, 100d, 100e, travelling from a departure to a destination, at four different time moments, t_1-t_4.

The vehicles 100a, 100b, 100c, 100d, 100e have different starting points **A**, **B**. Three vehicles 100a, 100b, 100c starts from starting point B, and two vehicles 100d, 100e start from starting point A at the time moment t_1, e.g. forming two sub-platoons.

At the later moment in time t_2, the vehicles 100a, 100b, 100c, 100d, 100e have joint together for forming the platoon 110. The three vehicles 100a, 100b, 100c that have started from starting point B are driving in the lead of the platoon 110, while the other two vehicles 100d, 100e drive in the queue of the platoon 110. The vehicles 100a, 100b, 100c, 100d, 100e are

thus driving in a driving order, determined by which starting point it has started from, not by any rational reason.

For example, when the vehicles 100a, 100b, 100c, 100d, 100e have different destinations **C, D, E**, it may be rational to sort the vehicles 100a, 100b, 100c, 100d, 100e of the platoon 110 based on their respective destination C, D, E. However, in other embodiments, other criteria for sorting the vehicle order in the platoon 110 may be applied, such as weight of the vehicles, front area of the vehicles, motor strength of the vehicles, etc. as will be described later and illustrated in other Figures.

Further, a control arrangement **200**, connected to a database **210** and a transceiver **220** are illustrated in a stationary central node **230**.

The transceiver 220 is configured for wireless communication, e.g. according to any of the previously described wireless communication technologies. Thereby, via the transceiver 220, the control arrangement 200 may communicate with the vehicles 100a, 100b, 100c, 100d, 100e of the platoon 110, and obtain various data from the vehicles 100a, 100b, 100c, 100d, 100e, such as e.g. identity, load, destination, place in the platoon 110, etc.

The database 210 may comprise further information concerning the vehicles 100a, 100b, 100c, 100d, 100e.

The control arrangement 200 may then, based upon various data concerning the vehicles 100a, 100b, 100c, 100d, 100e of the platoon 110 control the composition and order of the platoon 110, and for example add/ remove vehicles 100a, 100b, 100c, 100d, 100e to the platoon 110, handling over vehicles 100a, 100b, 100c, 100d, 100e to another vehicle or another platoon, rearrange the order within the platoon 110, etc.

Thereby, for example, another vehicle may approach and drive up to the platoon 110 and interact with the platoon 110 in such a way that the desired vehicle 100a, 100b, 100c, 100d, 100e leaves the first platoon 110 and joins the approaching vehicle.

In this way, by concatenating the vehicles 100a, 100b, 100c, 100d, 100e into the platoon 110 during transportation, and also arrange/ re-arrange the vehicles 100a, 100b, 100c, 100d, 100e while driving, which reduces the transportation time in comparison with stopping and arranging the platoon 110 on a parking lot or similar.

Also, the vehicles 100a, 100b, 100c, 100d, 100e are vulnerable for theft when the vehicles

100a, 100b, 100c, 100d, 100e are parked. By arranging the vehicle order during transportation instead, the risk of theft is reduced.

Vehicles 100a, 100b, 100c, 100d, 100e of the platoon 110 may be arranged in a modified order by the control arrangement 200, at a third moment in time t_3.

In some embodiments, assuming that there is an active driver present in the first vehicle of the platoon 110, the control arrangement 200 may keep track of the driving/ working time of the active driver in the first vehicle and when it is time for him/ her to rest, another vehicle in the platoon 110, with a rested driver, may take lead of the platoon 110.

This rearrangement of the driving order leads to shorter total transportation time and less time parked with the vehicles 100a, 100b, 100c, 100d, 100e, which enhance safety from theft.

Further, it may be detected that yet a vehicle is approaching the platoon 110, and the control arrangement 200 may determine where in the platoon 110 the new vehicle is to drive.

The database 210 may in some embodiments comprise further information concerning the vehicles 100a, 100b, 100c, 100d, 100e, stored associated with an identifier of the respective vehicle 100a, 100b, 100c, 100d, 100e. The vehicle identifier may be for example the vehicle registration number, a user-defined reference, or any unique reference known by the vehicles 100a, 100b, 100c, 100d, 100e and the control arrangement 200.

Further, the control arrangement 200 may receive and store additional information concerning the respective vehicle 100a, 100b, 100c, 100d, 100e, may comprise e.g. modes or states of the respective vehicle 100a, 100b, 100c, 100d, 100e, gear ratios in the gearbox of the respective vehicle 100a, 100b, 100c, 100d, 100e, minimum and maximum speed of the respective vehicle 100a, 100b, 100c, 100d, 100e, vehicle destinations C, D, E, air drag, speed- and load-dependent losses, cooling/ heating requirements, maximum torque curve, information concerning the relation between torque, engine speed and energy consumption, gear-shift timing, gear shift time, charging level of batteries, pressure level of pneumatic reservoir, emissions, and/ or other similar information relevant for the vehicle performance on the upcoming road section 120.

As these properties may change over time, updating may be made continuously, or at regular time intervals; for example, the load of the vehicles 100a, 100b, 100c, 100d, 100e may be different at different time periods.

Based upon this obtained information, and knowledge about the upcoming road section 120, the vehicles 100a, 100b, 100c, 100d, 100e of the platoon 110 may be arranged by the control arrangement 200, in order to reduce energy consumption for the platoon 110 as a whole. Thereby energy efficient driving may be made by the platoon 110 in all kind of landscapes, including hilly terrain. Another advantage of the describe method is that the control arrangement 200 may compute, improve and even optimise the energy consumption of the platoon 110 as a whole over the travel distance between starting points A, B and destination C, D, E.

This arrangement of the platoon 110 is illustrated in Figure 4 and further discussed in the corresponding description section.

Reducing the energy consumption, when the vehicles 100a, 100b, 100c, 100d, 100e are using fossil fuel, leads to not only cheaper transport, but also reduced emissions of harmful exhaust gas.

The route to the destinations C, D, E comprises a number of branching points **240a, 240b**. As the platoon 110 approaches the branching points 240a, 240b at a fourth moment in time t_4, the control arrangement 200 order the respective vehicle 100a, 100b, 100c, 100d, 100e in the platoon 110 to depart from the platoon 110 and instead continue alone, in a sub-platoon, or by joining a guiding vehicle, thereby forming a new platoon with the common destination.

In this arbitrary example, one vehicle 100a having a first destination C departure from the platoon 110 at the first branching point 240a; two vehicles 100d, 100b having a second destination D departure from the platoon 110 at the second branching point 240b; while the last vehicles 100c, 100e of the platoon 110 continue to the last destination E.

Figure 3A and **Figure 3B** illustrate a platoon 110 wherein the vehicles 100a, 100b, 100c are arranged/ rearranged. The respective Figures illustrates the platoon 110 and the arrangement at two different moments in time.

In this case, the control arrangement 200 has determined that the last vehicle 100c is to drive between the first vehicle 100a and the second vehicle 100b of the platoon 110. In a first action of the arrangement, the second vehicle 100b creates a gap **310**, by increasing the distance to the in-front vehicle 100a.

When the gap 310 has been created, the last vehicle 100c accelerates in the driving direction 105 and moves into the gap 310, where after the vehicles 100a, 100b, 100c reduces the intravehicular distances and reform the platoon 110. Thereby, the platoon 110 has been arranged. However, in other embodiments, the above described procedure may be repeated until all of the vehicles 100a, 100b, 100c have been arranged in the platoon 110 by the control arrangement 200.

Figure 4 illustrates a hill with a platoon 110 comprising various vehicles 100a, 100b, 100c with a respective intravehicular distance in-between them, driving in a driving direction 105; i.e. from the right to the left in the Figure.

When the first vehicle 100a in the platoon 110 is approaching the hill peak, and from a single vehicle optimisation point of view would benefit from releasing the accelerator in order to roll over the top and roll downhill, thereby saving energy. The other following vehicles 100b, 100c are still driving uphill and releasing the accelerator may be inappropriate for these following vehicles 100b, 100c, as they then may not have enough momentum for overcoming the hill peak. However, this problem may be eliminated or at least reduced by sorting the vehicles 100a, 100b, 100c in an appropriate order. The different vehicles 100a, 100b, 100c in the platoon 110 may have different weight and/ or different weight/ power ratio; or require gear change at different moments. Thereby, different vehicles 100a, 100b, 100c may be affected differently both in downhill and uphill. In some embodiments, the optimal driving order, in particular in hilly terrain, may be to sort the vehicles 100a, 100b, 100c in falling heaviness order; or perhaps rather in increasing weight/ power ratio of the vehicles 100a, 100b, 100c.

In hilly terrain, perhaps in particular for heavy vehicles such as e.g. trucks when travelling along an incline, the gravitational force has a strong influence. Heavy vehicles are typically not able to produce a sufficient driving torque to maintain the velocity when travelling along an uphill with a slope greater than e.g. approximately 3-5% at 90 km/h in a non-limiting example, which further may be different for different vehicles 100a, 100b, 100c based on different properties of the vehicles 100a, 100b, 100c.

Similarly, when facing a downhill, heavy vehicles will typically experience a speed increase if the slope is less than e.g. approximately -1-5 % or there about in a non-limiting example, which again is merely exemplary and may be very depending on different properties of the vehicles 100a, 100b, 100c such as weight, engine, etc. Hence, the induced gravitational force can act as a positive or negative longitudinal force depending on the incline of the road 120. In downhill, the engine power is not really relevant for determining the best driving order

of the vehicles 100a, 100b, 100c, but rather the weight; i.e. the best driving order in order may be to have the heaviest vehicle 100a, 100b, 100c as leading vehicle, and the other vehicles 100a, 100b, 100c in falling weight order.

Different vehicles 100a, 100b, 100c in the platoon 110 may have different weight and/ or different weight/ power ratio. Thus, in order for the vehicles 100a, 100b, 100c in the platoon 110 to pass the hill in a grouped manner and still earning the advantages with the platoon formation, velocity profiles for the vehicles 100a, 100b, 100c in the platoon 110 may be determined, that minimises or at least reduces a weighted sum of energy consumption and travel time of the vehicles 100a, 100b, 100c. In some embodiment, distinct velocity profiles may be used for each vehicle 100a, 100b, 100c in the platoon 110. On some other embodiments, some or all of the vehicle 100a, 100b, 100c in the platoon 110 may share the same velocity profile, to keep at the upcoming road segment 120.

The weighted sum of energy consumption and travel time of the vehicles 100a, 100b, 100c may be computed for minimising or reducing the energy consumption, while keeping the vehicles 100a, 100b, 100c in the platoon 110 within a certain velocity range, such as e.g. 70-80 km/h, 80-85 km/h, 80-90 km/h or similar, just for mentioning some non-limiting arbitrary examples. Typically, the velocity of the vehicles 100a, 100b, 100c in the platoon 110 may be allowed to increase to the upper velocity limit of the velocity range when driving in downhill and be allowed to decrease to the lower velocity limit of the velocity range otherwise.

Thus the vehicles 100a, 100b, 100c of the platoon 110 may be arranged for minimising or at least reducing the energy consumption of the platoon 110 as a whole. For example, the vehicles 100a, 100b, 100c may be organised in weight order, with the heaviest vehicle, or the vehicle with the highest weight/ power ratio first in the platoon 110 and the lightest vehicle, or the vehicle with the lowest weight/ power ratio at the end of the platoon 110, and the other vehicles 100a, 100b, 100c sorted in-between them.

Figure 5A and **Figure 5B** illustrate the platoon 110 approaching the first branching point 240a where the road divides and the other branching road leads to the destination C of one of the vehicles 100a, which may be unmanned.

A guiding vehicle **510** is approaching the platoon 110. The guiding vehicle 510 may be a truck; however, it may also be e.g. a car, a motorcycle, etc. The guiding vehicle 510 may be detected via sensors of the vehicles 100a, 100b, 100c in the platoon 110, or via inter-vehicular radio signalling, and identified as a guiding vehicle. The control arrangement 200 may then order the departing vehicle 100a to join the guiding vehicle 510 and continue driving in

a second driving direction **520**, jointly towards the destination C.

The rest of the platoon 110 may continue driving along the road 120 without having to drive with the departing vehicle 100a to its destination C, which saves transportation time of the platoon 110.

Figure 5C illustrates an opposite scenario to the one previously illustrated in Figures 5A and 5B, i.e. that a non-coordinated vehicle 100f is approaching a platoon 110. The vehicle 100f may be detected by sensors on the vehicles 100a, 100b, 100c, 100d, 100e of the platoon 110, or via inter-vehicular radio signalling, and the detection may be reported to the control arrangement 200.

The control arrangement 200 may then determine the most suitable position of the newly received vehicle 100f within the platoon 110, based e.g. on dimension, weight, engine capacity, made working hours by the driver, etc. The newly received vehicle 100f may then be ordered to drive into the determined position of the platoon 110.

Figure 6A illustrates an example of how any of the previously scenario in Figure 1, Figure 2, Figure 3A-3B, Figure 4, Figure 5A-5C may be perceived by the driver of a follower vehicle 100b, 100c, 100d, 100e in the platoon 110. Although the second vehicle 100b in the platoon 110 is illustrated, this is merely a non-limiting example. Any other vehicle 100a, 100b, 100c, 100d, 100e in the platoon 110, or some or all of them may be equally or similarly equipped.

The vehicle 100b thus follow the preceding vehicle 100a at an inter-vehicular distance **625**. The vehicle 100b comprises a control arrangement 200 configured for arranging driving order of vehicles 100a, 100b, 100c, 100d, 100e organised in the platoon 110 during conveyance from a starting point A, B to a destination C, D, E.

The control arrangement 200 may be connected to a database 210.

The vehicle 100b also may comprise a vehicle mounted distance measuring device **320**, such as e.g. radar unit, a rangefinder sensor, a lidar, a stereo camera, an ultrasonic sensor emitting an ultrasonic wave and detecting and analysing the reflections or similar device based on radar, infra-red light or micro waves for detecting the vehicle 100a in front, and determine the distance 625.

Further, the vehicle 100b may comprise a positioning unit **630**. The positioning unit 630 may be based on a satellite navigation system such as the Navigation Signal Timing and Ranging

(Navstar) Global Positioning System (GPS), Differential GPS (DGPS), Galileo, GLONASS, or the like. Thus the positioning unit 630 may comprise a GPS receiver.

The geographical position of the vehicle 100b may be determined continuously or at certain predetermined or configurable time intervals according to various embodiments.

Positioning by satellite navigation is based on distance measurement using triangulation from a number of satellites **640a, 640b, 640c, 640d**. The satellites 640a, 640b, 640c, 640d continuously transmit information about time and date (for example, in coded form), identity (which satellite 640a, 640b, 640c, 640d which broadcasts), status, and where the satellite 640a, 640b, 640c, 640d are situated at any given time. GPS satellites 640a, 640b, 640c, 640d sends information encoded with different codes, for example, but not necessarily based on Code Division Multiple Access (CDMA). This allows information from an individual satellite 640a, 640b, 640c, 640d distinguished from the others' information, based on a unique code for each respective satellite 640a, 640b, 640c, 640d. This information can then be transmitted to be received by the appropriately adapted positioning unit 630 in the vehicle 100b.

Distance measurement can according to some embodiments comprise measuring the difference in the time it takes for each respective satellite signal transmitted by the respective satellites 640a, 640b, 640c, 640d, to reach the positioning unit 630. As the radio signals travel at the speed of light, the distance to the respective satellite 640a, 640b, 640c, 640d may be computed by measuring the signal propagation time.

The positions of the satellites 640a, 640b, 640c, 640d are known, as they continuously are monitored by approximately 15-30 ground stations located mainly along and near the earth's equator. Thereby the geographical position, i.e. latitude and longitude, of the vehicle 100b may be calculated by determining the distance to at least three satellites 640a, 640b, 640c, 640d through triangulation. For determination of altitude, signals from four satellites 640a, 640b, 640c, 640d may be used according to some embodiments.

Having determined the geographical position of the vehicle 100b, and also determined the driving direction 105 of the vehicle 100b and the platoon 110, the control unit 200 may extract a road slope at a geographical position of the road 120 ahead of the vehicle 100b in the determined driving direction 105, such as e.g. on the upcoming road section 120.

The topography i.e. road slope of the upcoming road section 120 ahead of the vehicle 100b may be extracted from the database 650. The database 650 may be situated within the ve-

hicle 100b in some embodiments, or alternatively external to the vehicle 100b, and accessible via a wireless interface.

In the database 650, different geographical positions are stored associated with a respective road slope values, which may be extracted by using a geographical position and a direction as input values.

The topography of the upcoming road section 120 may be important for determining the vehicle order in the platoon 110.

The vehicles 100a, 100b, 100c, 100d, 100e in the platoon 110 may communicate with each other over a wireless interface. Thus the first vehicle 100a may comprise a first transceiver 610a and the second vehicle 100b a second transceiver 610b.

The wireless communication may be e.g. a Vehicle-to-Vehicle (V2V) signal, or any other wireless signal based on, or at least inspired by wireless communication technology such as Wi-Fi, Wireless Local Area Network (WLAN), Ultra Mobile Broadband (UMB), Bluetooth (BT), the communication protocol IEEE 802.11p, Wireless Access in Vehicular Environments (WAVE) or infrared transmission to name but a few possible examples of wireless communications.

Figure 6B also illustrates an example of an alternative embodiment of the second vehicle 100b in the platoon 110, previously discussed in conjunction with the presentation of Figure 3A.

In this embodiment, the control unit 200 is situated outside the own vehicle 100b, and also outside the platoon 110, and may be stationary or mobile.

The communication between the vehicles 100a, 100b, 100c, 100d, 100e in the platoon 110 may be made via the previously discussed wireless interface.

Figure 7 illustrates an example of a method **700** in a control arrangement 200 of a platoon 110, according to an embodiment. The flow chart in Figure 7 shows the method 700 for arranging, or rearranging, driving order of vehicles 100a, 100b, 100c, 100d, 100e organised in the platoon 110 during conveyance from a starting point A, B to a destination C, D, E.

The platoon 110 may be created by vehicles 100a, 100b, 100c, 100d, 100e having started

from at least two different starting points A, B; and/ or having at least two different destinations C, D, E.

The vehicles 100a, 100b, 100c, 100d, 100e may be any arbitrary kind of means for conveyance, such as a truck, a bus or a car. Some or all of these vehicles 100a, 100b, 100c, 100d, 100e may be autonomous vehicles without driver. Further, some vehicles 100a, 100b, 100c, 100d, 100e may have a driver on board, which is currently resting.

The number of vehicles 100a, 100b, 100c, 100d, 100e in the platoon 110 may be any number exceeding one, such as e.g. 2, 3, ..., ∞. A typical number may be e.g. 5- 20 vehicles in a non-limiting examples.

The vehicles 100a, 100b, 100c, 100d, 100e may communicate with other vehicles 100a, 100b, 100c, 100d, 100e in the platoon 110, and possibly also with other vehicles 100f or entities such as the control arrangement 200, via wireless communication signalling, based on e.g. Vehicle-to-Vehicle (V2V) communication or any other wireless communication technology such as Wi-Fi, Wireless Local Area Network (WLAN), Ultra Mobile Broadband (UMB), Bluetooth (BT), or infrared transmission to name but a few possible examples of wireless communications.

In order to correctly be able to arrange driving order for the vehicles 100a, 100b, 100c, 100d, 100e in the platoon 110, the method 700 may comprise a number of steps **701-708**. However, some of these steps 701-708 may be performed solely in some alternative embodiments, like e.g. steps 705-708. Further, the described steps 701-708 may be performed in a somewhat different chronological order than the numbering suggests. The method 700 may comprise the subsequent steps:

Step 701 comprises obtaining information of the vehicles 100a, 100b, 100c, 100d, 100e in the platoon 110.

The information may be obtained via any of the previously discussed wireless communication technologies.

In some embodiments, wherein at least some of the vehicles 100a, 100b, 100c, 100d, 100e have different starting points A, B, or different destinations C, D, E, the obtained information may comprise, or relate to starting point A, B, or destination C, D, E, of the vehicle 100a, 100b, 100c, 100d, 100e.

The obtained information may e.g. relate to presence of driver, driving time information of the driver.

In some embodiments, the obtained information may relate to driving capacity, such as weight, weight/ power ratio, and/ or acceleration capacity of the respective vehicles 100a, 100b, 100c, 100d, 100e. The weight/ power ratio, or power loading, is a calculation commonly applied to vehicles in general, to enable the comparison of one vehicle's performance to another. It is used as a measurement of performance of a vehicle as a whole, with the weight (or mass) of the vehicle divided by the engine's power output, to give a metric that is independent of the vehicle's size.

In yet some embodiments, the obtained information may relate to vehicular front size of the vehicles 100a, 100b, 100c, 100d, 100e.

The obtained information may in some embodiments comprise a unique vehicle reference received from the vehicle 100a, 100b, 100c, 100d, 100e. Other information of the vehicle 100a, 100b, 100c, 100d, 100e may be obtained from the database 210, using the unique vehicle reference.

Step 702 comprises determining the driving order of the vehicles 100a, 100b, 100c, 100d, 100e, based on the obtained 701 information.

The driving order of the vehicles 100a, 100b, 100c, 100d, 100e may be determined based on e.g. destination C, D, E, of the vehicles 100a, 100b, 100c, 100d, 100e, driving time information of an active driver, e.g. the driver of the first vehicle 100a of the platoon 110. This vehicle 100a may instead be exchanged for a vehicle 100a, 100b, 100c, 100d, 100e of the platoon 110 having a well-rested driver.

Further, the driving order of the vehicles 100a, 100b, 100c, 100d, 100e may be determined based on presence of driver, and/ or driving time information of the driver. A vehicle 100a, 100b, 100c, 100d, 100e without driver may be determined not to drive as leading vehicle of the platoon 110.

In some embodiments, the driving order of the vehicles 100a, 100b, 100c, 100d, 100e may be determined based on driving capacity, such as weight, weight/ power ratio, and/ or acceleration capacity of the respective vehicles 100a, 100b, 100c, 100d, 100e. This may be an advantage in particular in hilly terrain, as the vehicles 100a, 100b, 100c, 100d, 100e may be organised in weight order, capacity order, etc., with the weakest vehicle 100a, 100b, 100c,

100d, 100e driving first in the platoon 110, the lightest/ most capable vehicle 100a, 100b, 100c, 100d, 100e at the end and the other vehicles 100a, 100b, 100c, 100d, 100e sorted in order in between them.

In yet some embodiments wherein an approaching vehicle 100f has been detected which is to be connected to the platoon 110, the driving order of the vehicles 100a, 100b, 100c, 100d, 100e may be determined, taking the detected vehicle 100f into account.

Step 703 comprises setting a sequential order for sorting vehicles 100a, 100b, 100c, 100d, 100e of the platoon 110 into the determined 702 driving order.

The setting 703 of the sequential order may comprise determining a first vehicle 100a, 100b, 100c, 100d, 100e of the platoon 110, to change positions within the platoon 110.

The sequential order may be determined, e.g. in order to make as few vehicle changes as possible, or by starting making changes with the most backward vehicle in the platoon 110.

Step 704 comprises arranging the vehicles 100a, 100b, 100c, 100d, 100e in the determined 702 driving order by ordering the vehicles 100a, 100b, 100c, 100d, 100e to change positions according to the set 703 sequential order.

The arrangement of the vehicles 100a, 100b, 100c, 100d, 100e may in some embodiments comprise commanding a second vehicle 100a, 100b, 100c, 100d, 100e in the platoon 110 to create a gap 310 between two vehicles 100a, 100b, 100c, 100d, 100e of the platoon 110, for enabling the first vehicle 100a, 100b, 100c, 100d, 100e to change positions; and wherein the first vehicle 100a, 100b, 100c, 100d, 100e is ordered to drive into the created gap 310 ahead of the second vehicle 100a, 100b, 100c, 100d, 100e.

The vehicle driving order may be arranged in order to change leading vehicle 100a of the platoon 110 when the driver of the current leading vehicle 100a is restricted to continue driving due to driving time restrictions, based on the driving/ resting/ working time information of the driver.

The driving order of the vehicles 100a, 100b, 100c, 100d, 100e may in some embodiments be arranged, based on the respective weight and/ or acceleration capacity.

In yet some embodiments wherein an approaching vehicle 100f has been detected which is to be connected to the platoon 110, the driving order of the vehicles 100a, 100b, 100c, 100d,

100e may be arranged, taking the detected vehicle 100f into account.

Step 705 which may be performed only in some embodiments wherein the obtained 701 information relates to the destination C, D, E of the vehicle 100a, 100b, 100c, 100d, 100e, comprises determining that the platoon 110 is approaching a branching point 240a, 240b where at least one vehicle 100a, 100b, 100c, 100d, 100e has to leave the platoon 110 in order to continue driving towards the destination C, D, E of the vehicle 100a, 100b, 100c, 100d, 100e.

This may be determined based on positioning information obtained from any of the vehicles 100a, 100b, 100c, 100d, 100e of the platoon 110, information concerning destination of the respective vehicles 100a, 100b, 100c, 100d, 100e and map data.

The driving order of the vehicles 100a, 100b, 100c, 100d, 100e may be arranged based on the respective vehicle destination C, D, E. Thereby, the vehicles 100a, 100b, 100c, 100d, 100e may be organised for facilitating departure of the main platoon 110, for driving the last way to the destination in a sub platoon, which thereby may be formed already while driving in the main platoon 110.

Step 706 which may be performed only in some particular embodiments, comprises detecting a guiding vehicle 510 for guiding vehicles 100a, 100b, 100c, 100d, 100e to the destination C, D, E.

Step 707 which may be performed only in some embodiments wherein step 705 has been performed, comprises ordering the vehicle 100a, 100b, 100c, 100d, 100e to leave the platoon 110 and instead continue driving towards the destination C, D, E.

The order to leave the platoon 110 may in some embodiments comprise an instruction to join the guiding vehicle 510, for driving to the destination C, D, E.

Step 708 which may be performed only in some particular embodiments, comprises detecting an approaching vehicle 100f, which is to be connected to the platoon 110.

The detection may be made via a sensor within one of the vehicles 100a, 100b, 100c, 100d, 100e of the platoon 110; and/ or via radio communication between the approaching vehicle 100f and one of the vehicles 100a, 100b, 100c, 100d, 100e of the platoon 110.

Figure 8 illustrates an embodiment of a system **800** for organising a vehicle platoon 110.

The system 800 comprises a control arrangement 200 of the platoon 110, for arranging, or rearranging, driving order of vehicles 100a, 100b, 100c, 100d, 100e organised in the platoon 110 during conveyance from a starting point A, B to a destination C, D, E.

The control arrangement 200 may thus perform at least some of the previously described steps 701-708 according to the method 700 described above and illustrated in Figure 7.

The control arrangement 200 is configured to obtain information of the vehicles 100a, 100b, 100c, 100d, 100e in the platoon 110. Also, the control arrangement 200 is further configured to determine the driving order of the vehicles 100a, 100b, 100c, 100d, 100e, based on the obtained information. Further, the control arrangement 200 is configured to set a sequential order for sorting vehicles 100a, 100b, 100c, 100d, 100e of the platoon 110 into the determined driving order. The control arrangement 200 is also configured to arrange the vehicles 100a, 100b, 100c, 100d, 100e in the determined driving order by ordering the vehicles 100a, 100b, 100c, 100d, 100e to change positions according to the set sequential order.

Further, in some embodiments, wherein at least some of the vehicles 100a, 100b, 100c, 100d, 100e have different starting points A, B, or different destinations C, D, E, the control arrangement 200 may also be configured to obtain information relating to starting point A, B, or destination C, D, E, of the vehicle 100a, 100b, 100c, 100d, 100e. Also, the control arrangement 200 may be additionally configured to arrange the driving order of the vehicles 100a, 100b, 100c, 100d, 100e based on the respective vehicle destination C, D, E.

In some embodiments, the control arrangement 200 may set the sequential order by determining a first vehicle 100a, 100b, 100c, 100d, 100e of the platoon 110, to change positions within the platoon 110. In addition, the control arrangement 200 may be configured to arrange the vehicles 100a, 100b, 100c, 100d, 100e by commanding a second vehicle 100a, 100b, 100c, 100d, 100e in the platoon 110 to create a gap 310 for enabling the first vehicle 100a, 100b, 100c, 100d, 100e to change position into the gap 310, wherein the first vehicle 100a, 100b, 100c, 100d, 100e is ordered to drive into the created gap 310 ahead of the second vehicle 100a, 100b, 100c, 100d, 100e.

The control arrangement 200 may be configured to arrange the vehicle driving order, in order to change leading vehicle 100a of the platoon 110 when the driver of the current leading vehicle 100a is restricted to continue driving due to driving time restrictions, based on the driving time information of the driver, when the obtained information relates to presence of driver; and/ or driving time information of the driver.

In some embodiments, wherein the obtained information relates to driving capacity, such as weight and/ or acceleration capacity, of the respective vehicles 100a, 100b, 100c, 100d, 100e, the control arrangement 200 may also be further configured to arrange the vehicle driving order of the vehicles 100a, 100b, 100c, 100d, 100e, based on the respective driving capacities of the vehicles 100a, 100b, 100c, 100d, 100e.

In yet some embodiments, wherein the obtained information relates to the destination C, D, E of the vehicle 100a, 100b, 100c, 100d, 100e, the control arrangement 200 may be further configured to determine that the platoon 110 is approaching a branching point 240a, 240b where at least one vehicle 100a, 100b, 100c, 100d, 100e has to leave the platoon 110 in order to continue driving towards the destination C, D, E of the vehicle 100a, 100b, 100c, 100d, 100e. The control arrangement 200 may also be configured to order the vehicle 100a, 100b, 100c, 100d, 100e to leave the platoon 110 and instead continue driving towards the destination C, D, E.

Furthermore, the control arrangement 200 may be configured to detect, via a sensor, or via inter-vehicular radio signalling, a guiding vehicle 510 for guiding vehicles 100a, 100b, 100c, 100d, 100e to the destination C, D, E. Furthermore, the control arrangement 200 may also be configured to order the vehicle 100a, 100b, 100c, 100d, 100e to leave the platoon 110 by joining the guiding vehicle 510, for driving to the destination C, D, E.

The control arrangement 200 may furthermore be configured to detect an approaching vehicle 100f, via a sensor, or via inter-vehicular radio signalling. Also, the control arrangement 200 may be configured to determine and arrange the driving order of the vehicles 100a, 100b, 100c, 100d, 100e, taking the detected approaching vehicle 100f into account.

Different route segments may have different character, for example be more or less hilly; or may comprise only uphill, or downhill parts. For this reason, different vehicle orders may be determined for different route segments, and the reaching of a trigger point along the route may trigger a change of driving order. The control arrangement 200 may plan the different respective driving orders for the distinct route segments when the platoon 110 is created; or alternatively be recalculated when a new vehicle 100a, 100b, 100c, 100d, 100e enters the platoon 110. Thereby, the vehicle order may be changed dynamically during the transportation, in order to use the best vehicle order for the particular route segment where the platoon 110 currently is driving.

The control arrangement 200 may comprise a receiving circuit **810** configured for receiving wireless and/ or wired signals from e.g. a database 210, and/ or transceiver 220/ 610.

The control arrangement 200 may also comprise a processing circuitry **820** configured for performing at least some of the calculating or computing of the control arrangement 200. Thus the processing circuitry 820 may be configured for arranging driving order of vehicles 100a, 100b, 100c, 100d, 100e organised in the platoon 110 during conveyance from a starting point A, B to a destination C, D, E.

Such processing circuitry 820 may comprise one or more instances of a processor, i.e. a Central Processing Unit (CPU), a processing unit, a processing circuit, a processor, an Application Specific Integrated Circuit (ASIC), a microprocessor, or other processing logic that may interpret and execute instructions. The herein utilised expression "processor" may thus represent a processing circuitry comprising a plurality of processing circuits, such as, e.g., any, some or all of the ones enumerated above.

Furthermore, the control arrangement 200 may comprise a memory **825** in some embodiments. The optional memory 825 may comprise a physical device utilised to store data or programs, i.e., sequences of instructions, on a temporary or permanent basis. According to some embodiments, the memory 825 may comprise integrated circuits comprising silicon-based transistors. The memory 825 may comprise e.g. a memory card, a flash memory, a USB memory, a hard disc, or another similar volatile or non-volatile storage unit for storing data such as e.g. ROM (Read-Only Memory), PROM (Programmable Read-Only Memory), EPROM (Erasable PROM), EEPROM (Electrically Erasable PROM), etc. in different embodiments.

Further, the control arrangement 200 may comprise a signal transmitter **830**. The signal transmitter 830 may be configured for transmitting a control signal over a wired or wireless interface to a wireless transmitter 220/ 610 which in turn may signal or broadcast wireless signals to vehicles 100a, 100b, 100c, 100d, 100e of the platoon 110.

The previously described steps 701-708 to be performed in the control arrangement 200 may be implemented through the one or more processing circuitries 820 within the control arrangement 200, together with computer program product for performing at least some of the functions of the steps 701-708. Thus a computer program product, comprising instructions for performing the steps 701-708 in the control arrangement 200 may perform the method 700 comprising at least some of the steps 701-708 for arranging driving order of vehicles 100a, 100b, 100c, 100d, 100e organised in the platoon 110 during conveyance from a starting point A, B to a destination C, D, E, when the computer program is loaded into the one or more processing circuitries 820 of the control arrangement 200.

The computer program product mentioned above may be provided for instance in the form of a data carrier carrying computer program code for performing at least some of the step 701-708 according to some embodiments when being loaded into the one or more processing circuitries 820 of the control arrangement 200. The data carrier may be, e.g., a hard disk, a CD ROM disc, a memory stick, an optical storage device, a magnetic storage device or any other appropriate medium such as a disk or tape that may hold machine readable data in a non-transitory manner. The computer program product may furthermore be provided as computer program code on a server and downloaded to the control arrangement 200 remotely, e.g., over an Internet or an intranet connection.

Further, some embodiments may comprise a vehicle 100a, 100b, 100c, 100d, 100e comprising a control arrangement 200, as described above.

Additionally, some embodiments may comprise a stationary central node 230 comprising a control arrangement 200 as described above. The stationary central node 230 may comprise e.g. a server.

The terminology used in the description of the embodiments as illustrated in the accompanying drawings is not intended to be limiting of the described method 700; the control arrangement 200; the system 800; the computer programs; the vehicle 100a, 100b, 100c, 100d, 100e; or the stationary central node 230. Various changes, substitutions or alterations may be made, without departing from invention embodiments as defined by the appended claims.

As used herein, the term "and/ or" comprises any and all combinations of one or more of the associated listed items. The term “or” as used herein, is to be interpreted as a mathematical OR, i.e., as an inclusive disjunction; not as a mathematical exclusive OR (XOR), unless expressly stated otherwise. In addition, the singular forms "a", "an" and "the" are to be interpreted as “at least one”, thus also possibly comprising a plurality of entities of the same kind, unless expressly stated otherwise. It will be further understood that the terms "includes", "comprises", "including" or "comprising", specifies the presence of stated features, actions, integers, steps, operations, elements, or components, but do not preclude the presence or addition of one or more other features, actions, integers, steps, operations, elements, components, or groups thereof. A single unit such as e.g. a processor may fulfil the functions of several items recited in the claims. The mere fact that certain measures are recited in mutually different dependent claims does not indicate that a combination of these measures cannot be used to advantage. A computer program may be stored/ distributed on a suitable

medium, such as an optical storage medium or a solid-state medium supplied together with or as part of other hardware, but may also be distributed in other forms such as via Internet or other wired or wireless communication system.

PATENT CLAIMS

1. A control arrangement (200) of a platoon (110), for arranging driving order of vehicles (100a, 100b, 100c, 100d, 100e) organised in the platoon (110) during conveyance from a starting point (A, B) to a destination (C, D, E); wherein the control arrangement (200) is configured to:

obtain information of the vehicles (100a, 100b, 100c, 100d, 100e) in the platoon (110);

determine the driving order of the vehicles (100a, 100b, 100c, 100d, 100e), based on the obtained information;

set a sequential order for sorting vehicles (100a, 100b, 100c, 100d, 100e) of the platoon (110) into the determined driving order; and

arrange the vehicles (100a, 100b, 100c, 100d, 100e) in the determined driving order by ordering the vehicles (100a, 100b, 100c, 100d, 100e) to change positions according to the set sequential order.

2. The control arrangement (200) according to claim 1, wherein at least some of the vehicles (100a, 100b, 100c, 100d, 100e) have different starting points (A, B), or different destinations (C, D, E); and wherein the control arrangement (200) is configured to:

obtain information relating to starting point (A, B), or destination (C, D, E), of the vehicle (100a, 100b, 100c, 100d, 100e); and

arrange the driving order of the vehicles (100a, 100b, 100c, 100d, 100e) based on the respective vehicle destination (C, D, E).

3. The control arrangement (200) according to any one of claim 1 or claim 2, further configured to:

set the sequential order by determining a first vehicle (100a, 100b, 100c, 100d, 100e) of the platoon (110), to change positions within the platoon (110); and

arrange the vehicles (100a, 100b, 100c, 100d, 100e) by commanding a second vehicle (100a, 100b, 100c, 100d, 100e) in the platoon (110) to create a gap (310) for enabling the first vehicle (100a, 100b, 100c, 100d, 100e) to change position into the gap (310); and

wherein the first vehicle (100a, 100b, 100c, 100d, 100e) is ordered to drive into the created gap (310) ahead of the second vehicle (100a, 100b, 100c, 100d, 100e).

4. The control arrangement (200) according to any one of claims 1-3, wherein the obtained information relates to:

presence of driver; and

driving time information of the driver; and

wherein the control arrangement (200) is configured to:

arrange the vehicle driving order, in order to change leading vehicle (100a) of the platoon (110) when the driver of the current leading vehicle (100a) is restricted to continue driving due to driving time restrictions, based on the driving time information of the driver.

5. The control arrangement (200) according to any one of claims 1-4, wherein the obtained information relates to driving capacity, such as weight and/ or acceleration capacity, of the respective vehicles (100a, 100b, 100c, 100d, 100e); and wherein

the control arrangement (200) is further configured to:

arrange the vehicle driving order of the vehicles (100a, 100b, 100c, 100d, 100e), based on the respective driving capacities of the vehicles (100a, 100b, 100c, 100d, 100e).

6. The control arrangement (200) according to any one of claims 1-5, wherein the obtained information relates to the destination (C, D, E) of the vehicle (100a, 100b, 100c, 100d, 100e); and wherein

the control arrangement (200) is further configured to:

determine that the platoon (110) is approaching a branching point (240a, 240b) where at least one vehicle (100a, 100b, 100c, 100d, 100e) has to leave the platoon (110) in order to continue driving towards the destination (C, D, E) of the vehicle (100a, 100b, 100c, 100d, 100e); and

order the vehicle (100a, 100b, 100c, 100d, 100e) to leave the platoon (110) and instead continue driving towards the destination (C, D, E).

7. The control arrangement (200) according to claim 6, further configured to:

detect a guiding vehicle (510) for guiding vehicles (100a, 100b, 100c, 100d, 100e) to the destination (C, D, E); and

order the vehicle (100a, 100b, 100c, 100d, 100e) to leave the platoon (110) by joining the guiding vehicle (510), for driving to the destination (C, D, E).

8. The control arrangement (200) according to any one of claims 1-7, further configured to:

detect an approaching vehicle (100f); and

determine and arrange the driving order of the vehicles (100a, 100b, 100c, 100d, 100e), taking the detected approaching vehicle (100f) into account.

9. A method (700) in a control arrangement (200) of a platoon (110), for arranging

driving order of vehicles (100a, 100b, 100c, 100d, 100e) organised in the platoon (110) during conveyance from a starting point (A, B) to a destination (C, D, E); wherein the method (700) comprises:

obtaining (701) information of the vehicles (100a, 100b, 100c, 100d, 100e) in the platoon (110);

determining (702) the driving order of the vehicles (100a, 100b, 100c, 100d, 100e), based on the obtained (701) information;

setting (703) a sequential order for sorting vehicles (100a, 100b, 100c, 100d, 100e) of the platoon (110) into the determined (702) driving order; and

arranging (704) the vehicles (100a, 100b, 100c, 100d, 100e) in the determined (702) driving order by ordering the vehicles (100a, 100b, 100c, 100d, 100e) to change positions according to the set (703) sequential order.

10. The method (700) according to claim 9, wherein at least some of the vehicles (100a, 100b, 100c, 100d, 100e) have different starting points (A, B), or different destinations (C, D, E); and wherein the obtained (701) information relates to:

starting point (A, B), or destination (C, D, E), of the vehicle (100a, 100b, 100c, 100d, 100e); and wherein

the driving order of the vehicles (100a, 100b, 100c, 100d, 100e) is arranged (705) based on the respective vehicle destination (C, D, E).

11. The method (700) according to any one of claim 9 or claim 10, wherein the setting (703) of the sequential order comprises determining a first vehicle (100a, 100b, 100c, 100d, 100e) of the platoon (110), to change positions within the platoon (110); and

wherein the arrangement (704) of the vehicles (100a, 100b, 100c, 100d, 100e) comprises:

commanding a second vehicle (100a, 100b, 100c, 100d, 100e) in the platoon (110) to create a gap (310) for enabling the first vehicle (100a, 100b, 100c, 100d, 100e) to change positions; and

wherein the first vehicle (100a, 100b, 100c, 100d, 100e) is ordered to drive into the created gap (310) ahead of the second vehicle (100a, 100b, 100c, 100d, 100e).

12. The method (700) according to any one of claims 9-11, wherein the obtained (701) information relates to:

presence of driver; and

driving time information of the driver; and

wherein the vehicle driving order is arranged (704) in order to change leading vehi-

cle (100a) of the platoon (110) when the driver of the current leading vehicle (100a) is restricted to continue driving due to driving time restrictions, based on the driving time information of the driver.

13. The method (700) according to any one of claims 9-12, wherein the obtained (701) information relates to driving capacity, such as weight and/ or acceleration capacity of the respective vehicles (100a, 100b, 100c, 100d, 100e); and wherein

the driving order of the vehicles (100a, 100b, 100c, 100d, 100e) is arranged (704) based on the respective weight and/ or acceleration capacity.

14. The method (700) according to any one of claims 9-13, wherein the obtained (701) information relates to the destination (C, D, E) of the vehicle (100a, 100b, 100c, 100d, 100e); and wherein the method (700) further comprises:

determining (705) that the platoon (110) is approaching a branching point (240a, 240b) where at least one vehicle (100a, 100b, 100c, 100d, 100e) has to leave the platoon (110) in order to continue driving towards the destination (C, D, E) of the vehicle (100a, 100b, 100c, 100d, 100e); and

ordering (707) the vehicle (100a, 100b, 100c, 100d, 100e) to leave the platoon (110) and instead continue driving towards the destination (C, D, E).

15. The method (700) according to claim 14, further comprising:

detecting (706) a guiding vehicle (510) for guiding vehicles (100a, 100b, 100c, 100d, 100e) to the destination (C, D, E); and

wherein the order (707) to leave the platoon (110) comprises an instruction to join the guiding vehicle (510), for driving to the destination (C, D, E).

16. The method (700) according to any one of claims 9-15, further comprising:

detecting (708) an approaching vehicle (100f); and

wherein the driving order of the vehicles (100a, 100b, 100c, 100d, 100e), is determined (702) and arranged (704), taking the detected (708) approaching vehicle (100f) into account.

17. The method (700) according to any one of claims 9-16, wherein the platoon (110) is created by vehicles (100a, 100b, 100c, 100d, 100e) having started from at least two different starting points (A, B).

18. A computer program comprising program code for performing a method (700) according to any one of claims 9-17 when the computer program is executed in the control

arrangement (200), according to any one of claims 1-8.

19. A vehicle (100a, 100b, 100c, 100d, 100e) comprising a control arrangement (200) according to any one of claims 1-8.

20. A stationary central node (230) comprising a control arrangement (200) according to any one of claims 1-8.

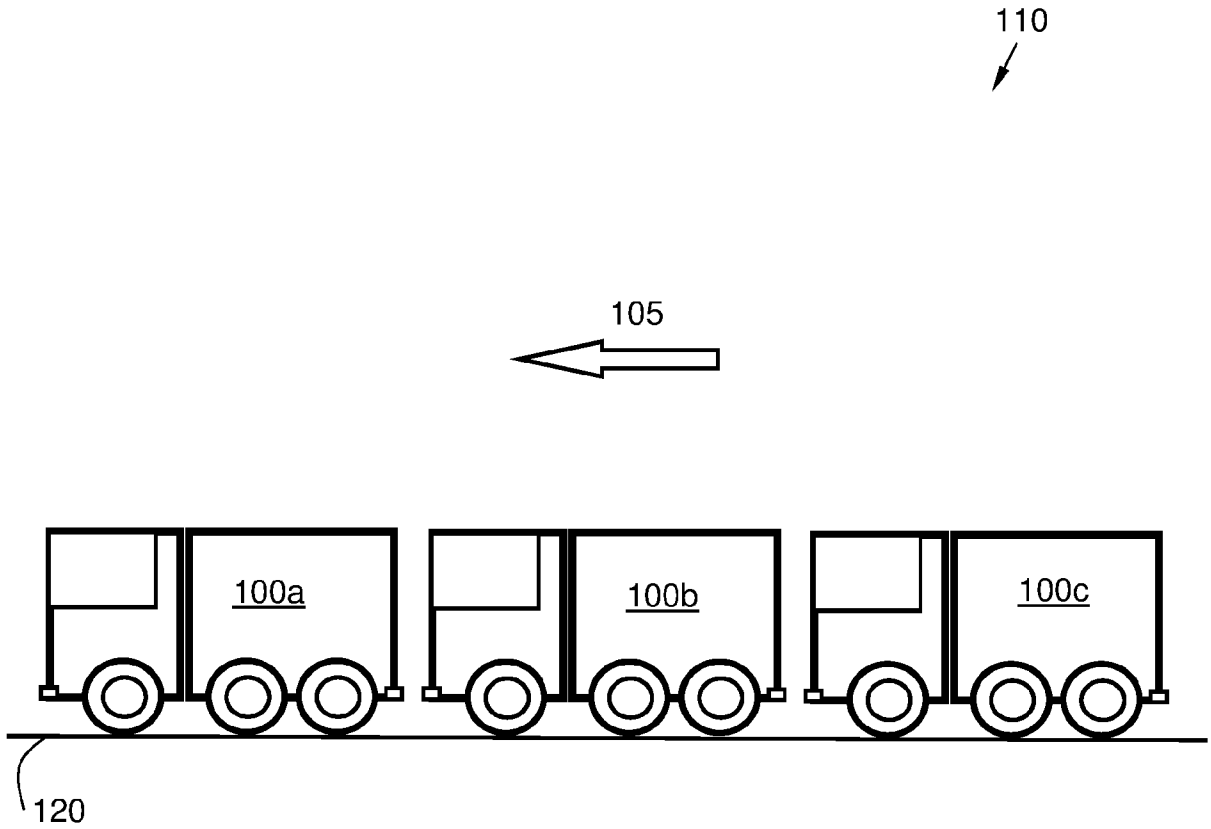

Fig. 1

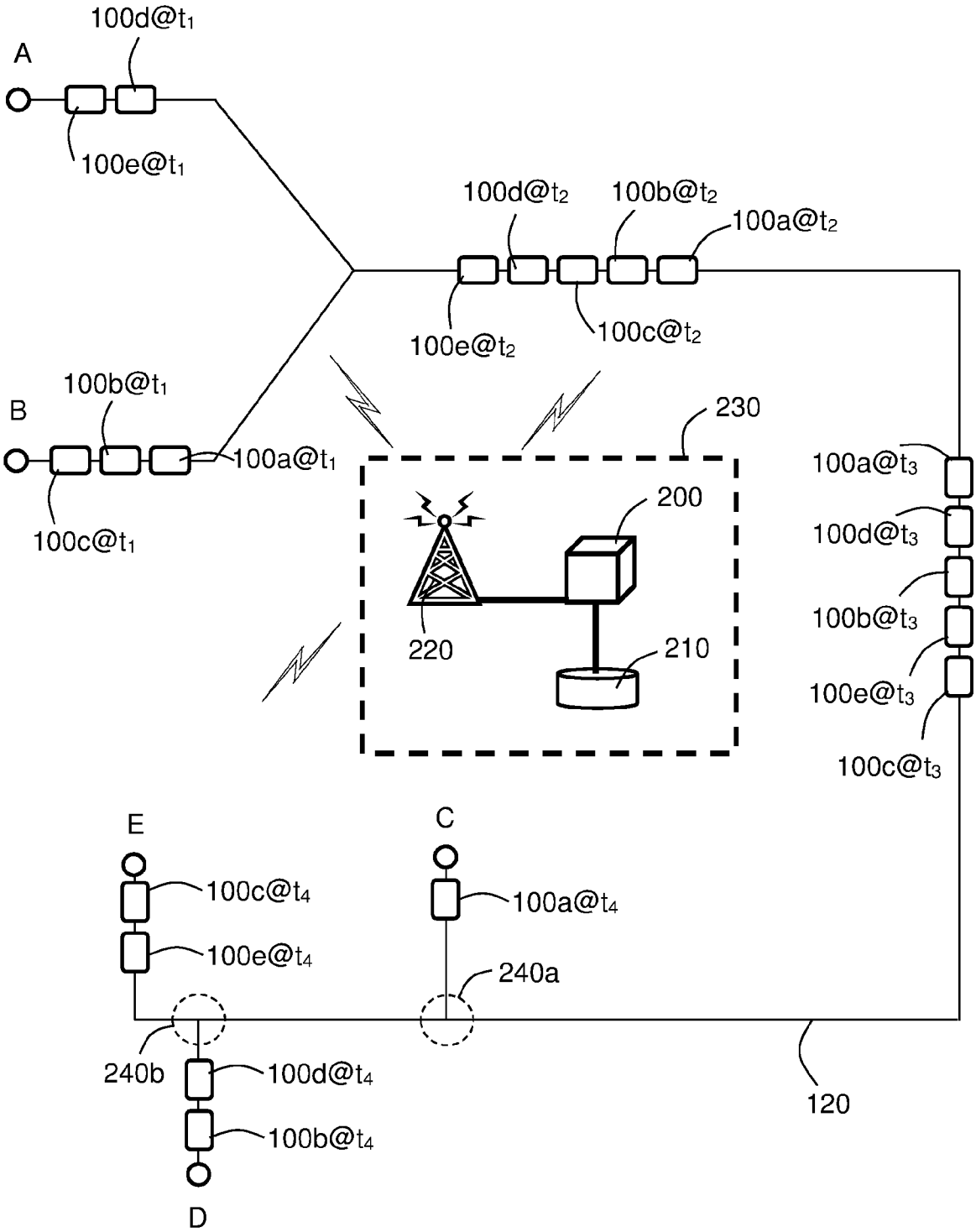
100d@t1
A
100e@t1
100d@t2
100b@t2
100a@t2
100e@t2
100c@t2
100b@t1
B
100a@t1
100c@t1
230
200
220
210
100a@t3
100d@t3
100b@t3
100e@t3
100c@t3
E
C
100c@t4
100a@t4
100e@t4
240a
240b
100d@t4
100b@t4
D
120

Fig. 2

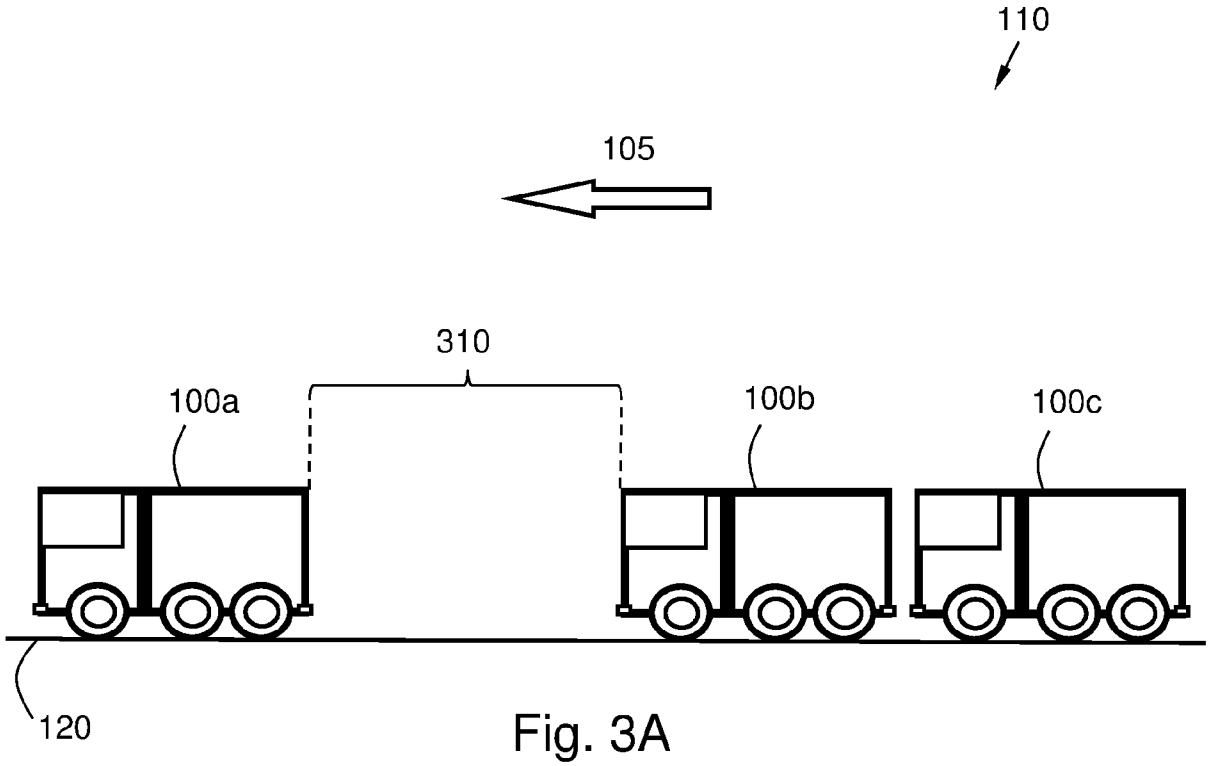

Fig. 3A

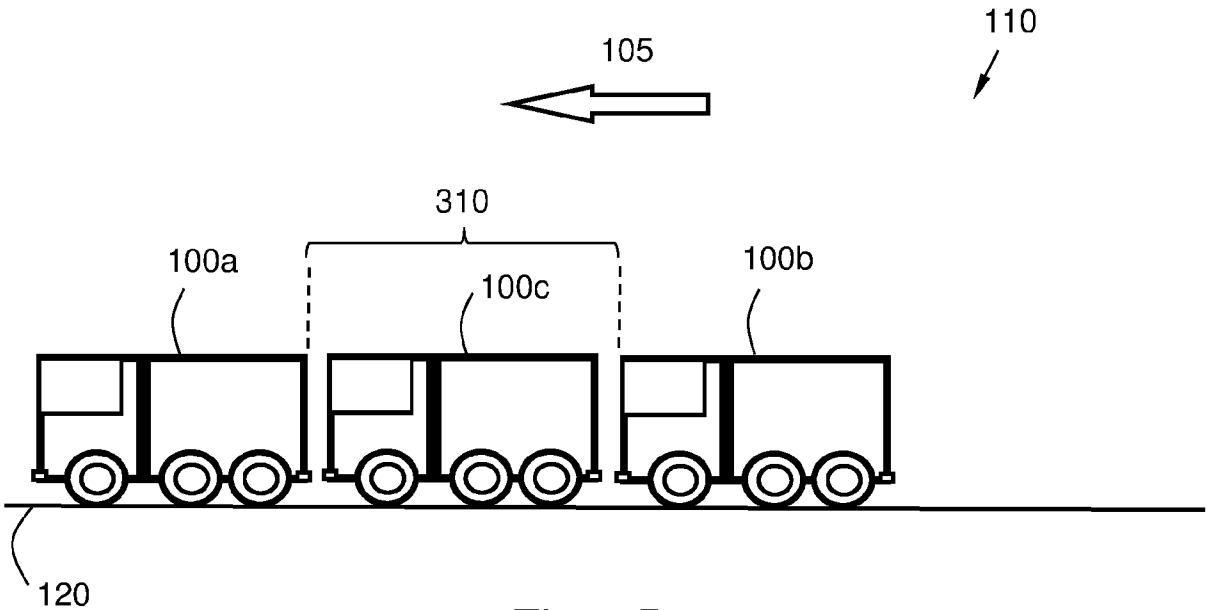

Fig. 3B

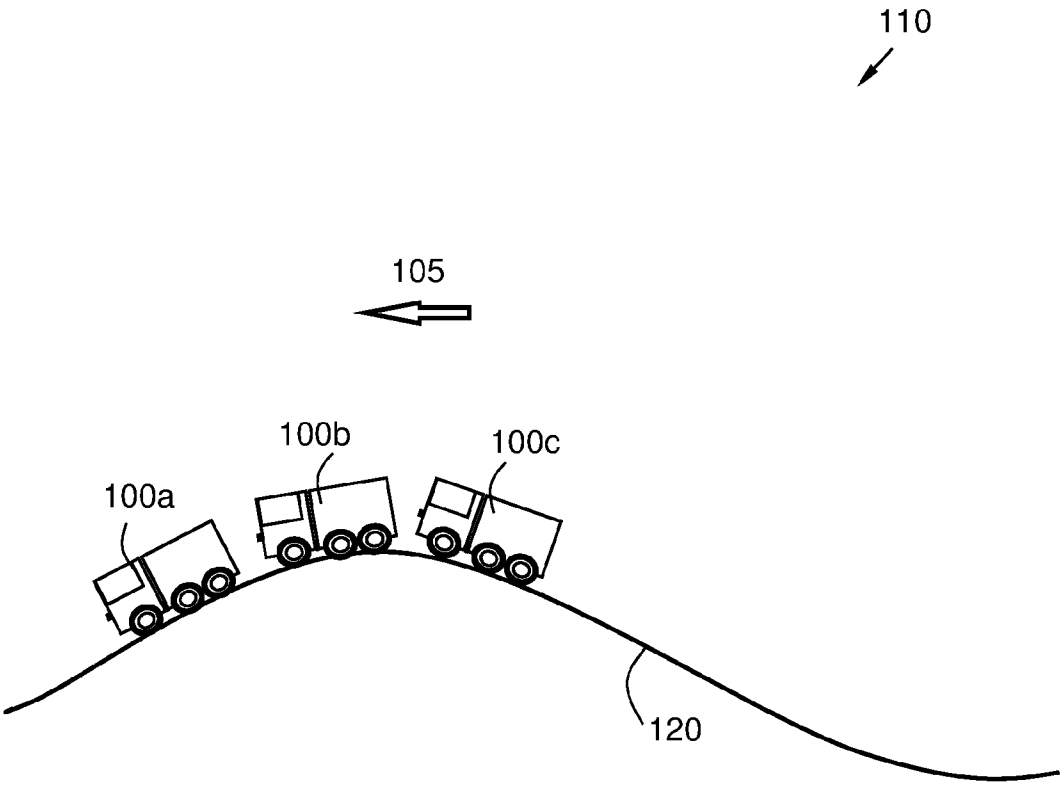

Fig. 4

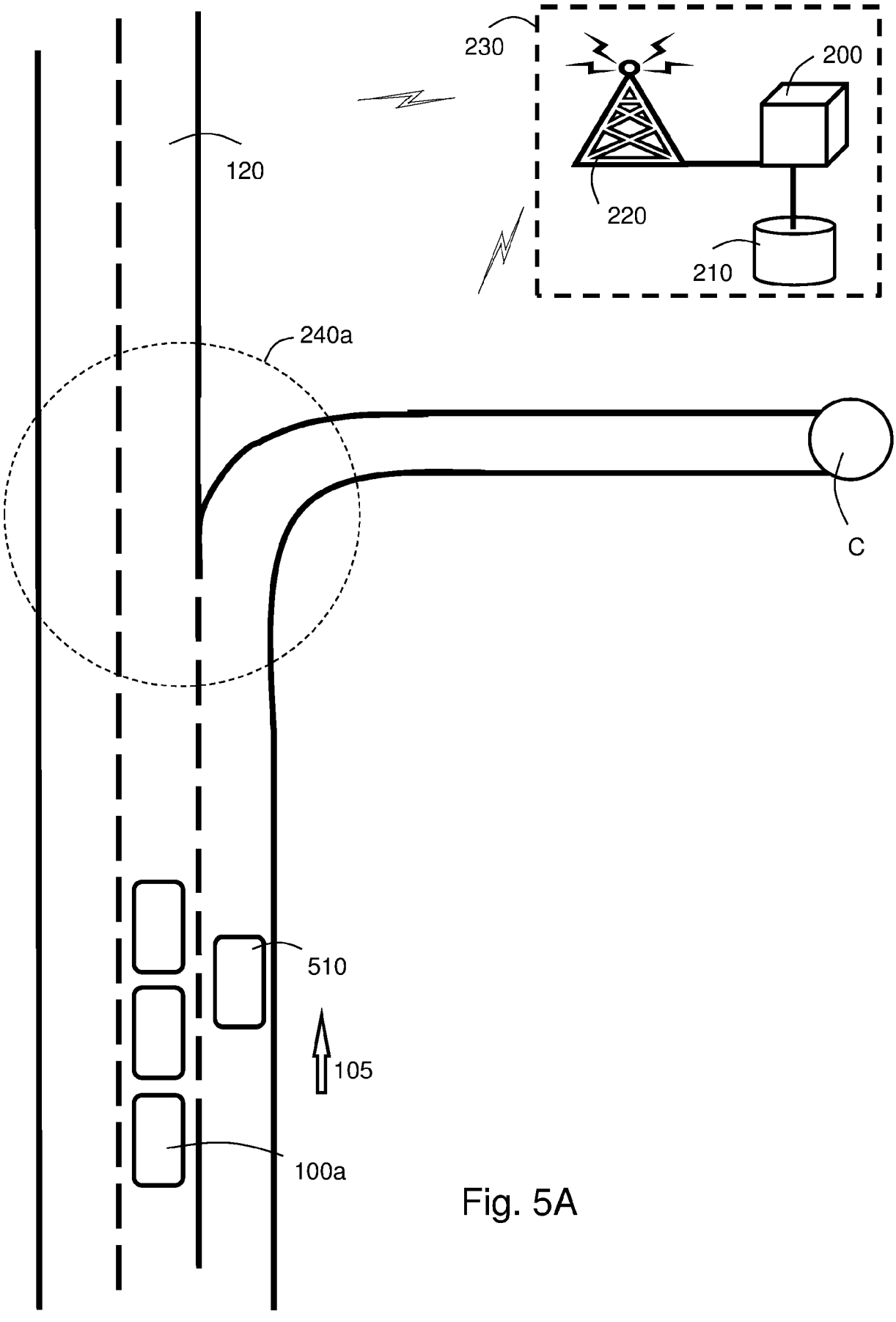

Fig. 5A

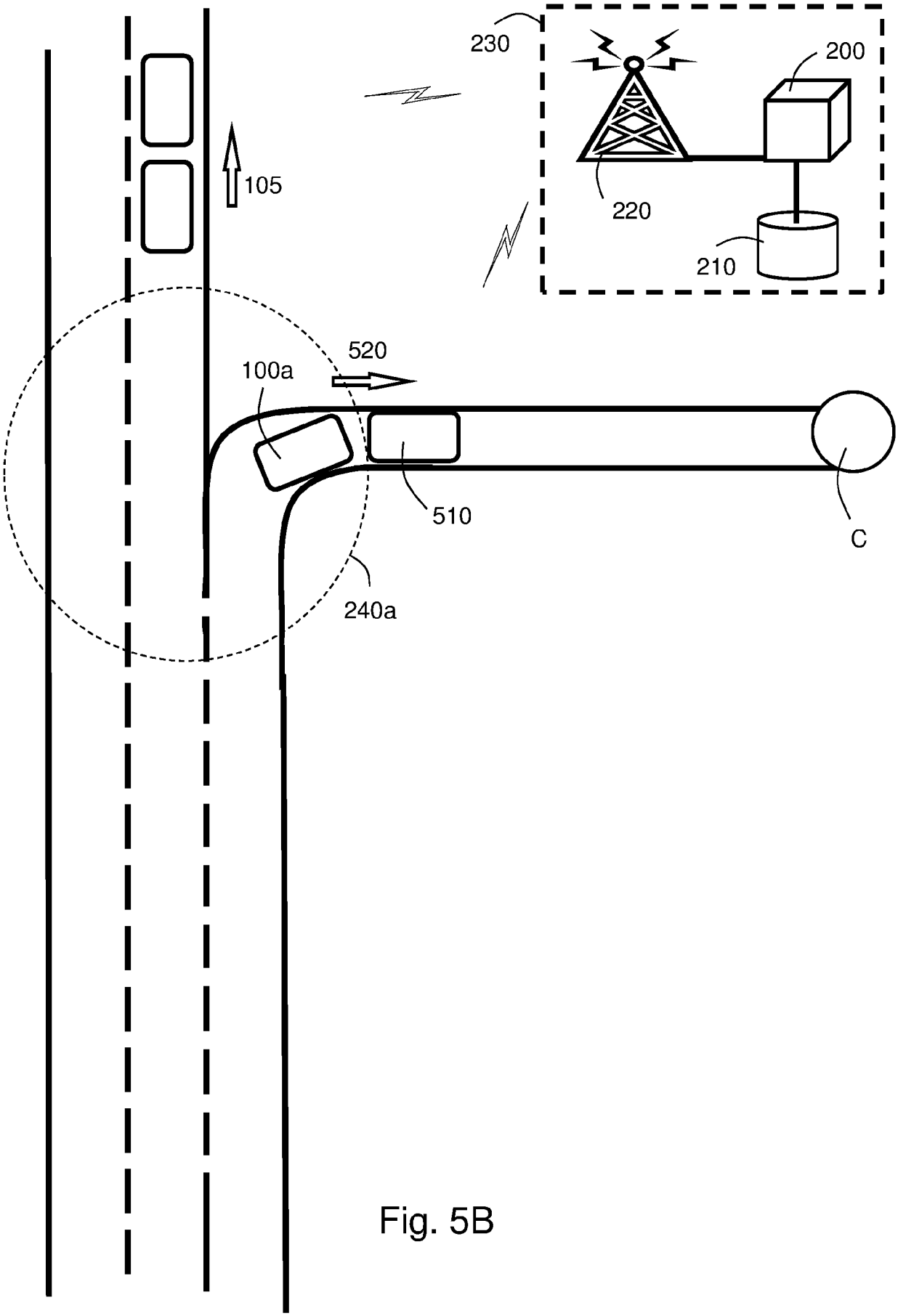

Fig. 5B

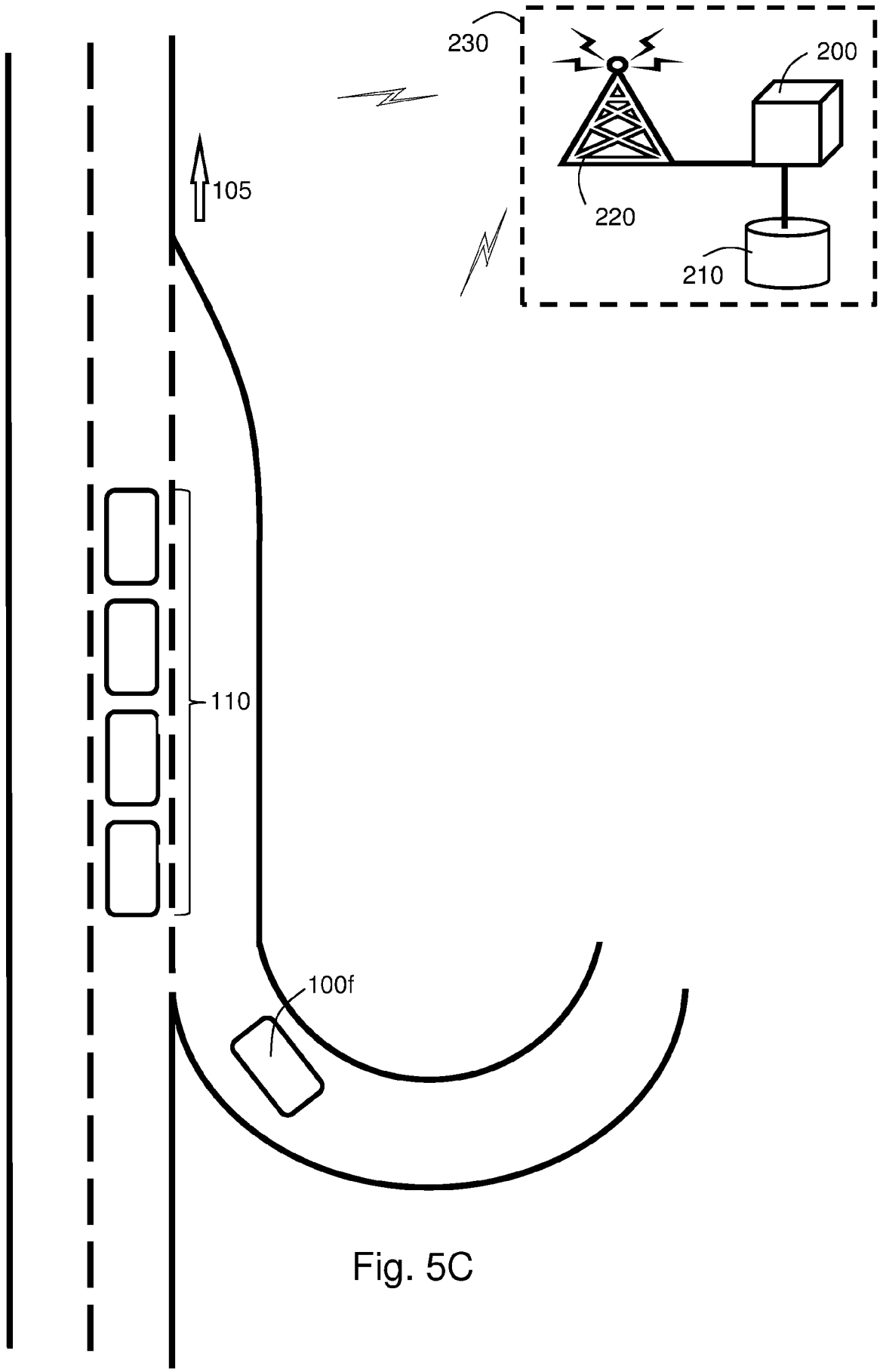

Fig. 5C

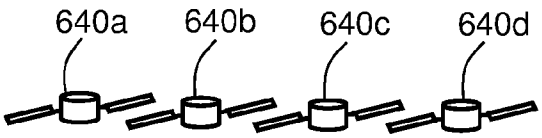
640a
640b
640c
640d

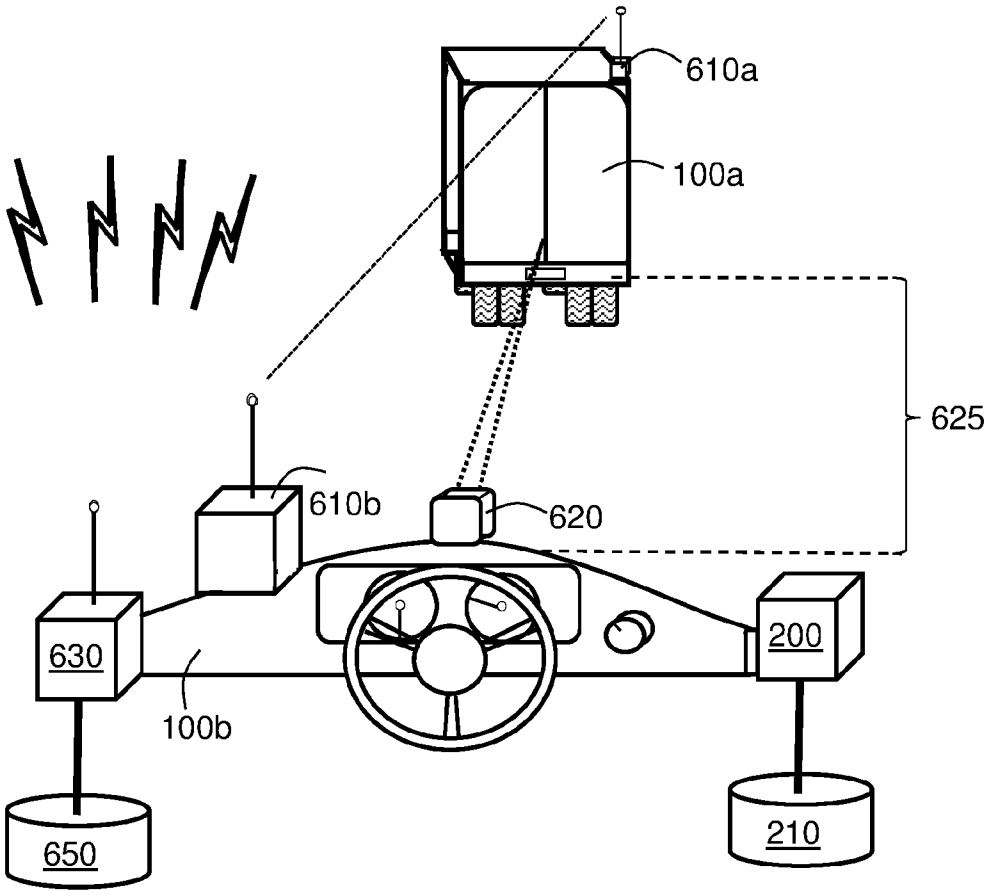
610a
100a
625
610b
620
630
100b
200
650
210

Fig. 6A

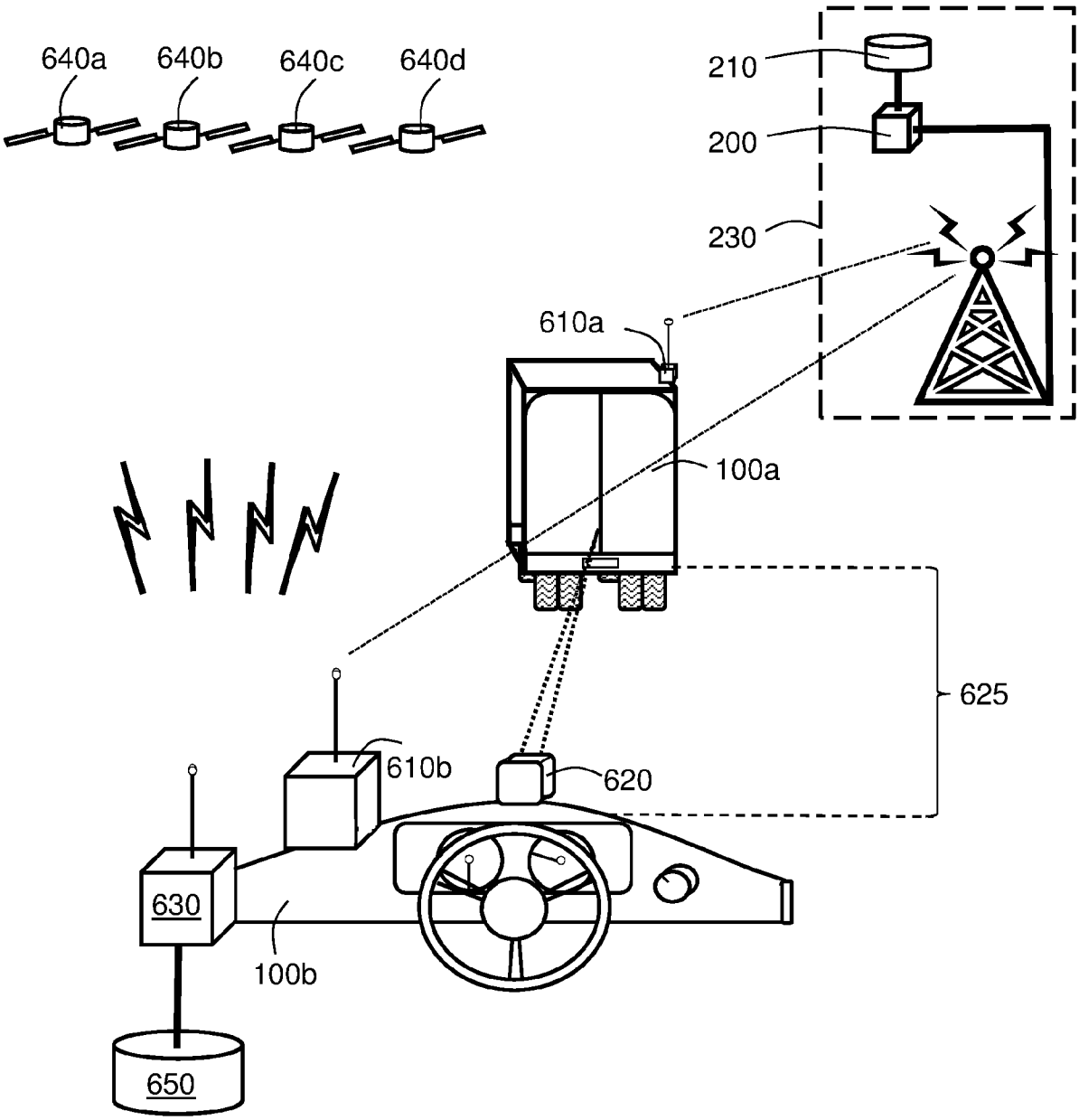
640a
640b
640c
640d
210
200
230
610a
100a
625
610b
620
630
100b
650

Fig. 6B

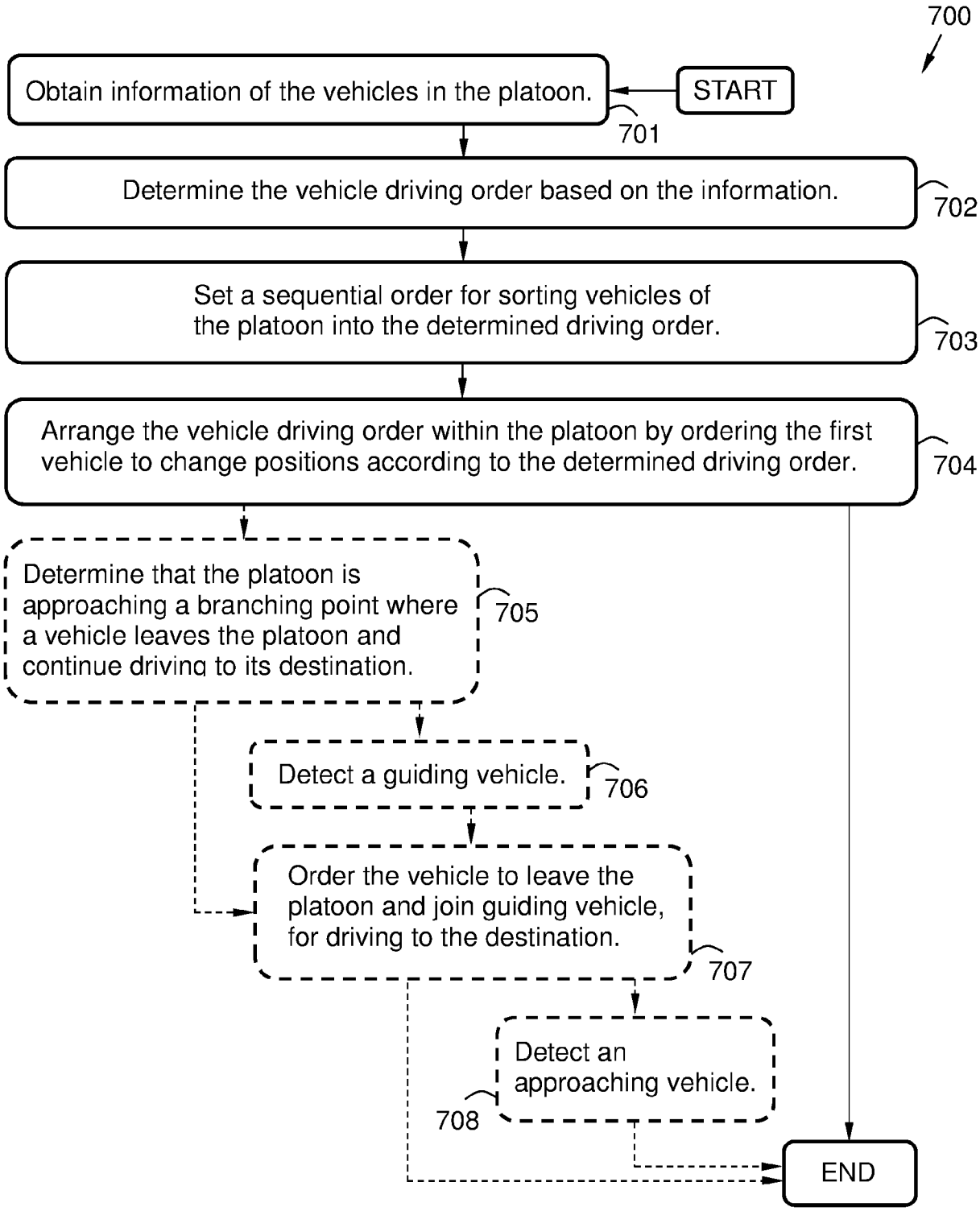
700
START
Obtain information of the vehicles in the platoon.
701
Determine the vehicle driving order based on the information.
702
Set a sequential order for sorting vehicles of the platoon into the determined driving order.
703
Arrange the vehicle driving order within the platoon by ordering the first vehicle to change positions according to the determined driving order.
704
Determine that the platoon is approaching a branching point where a vehicle leaves the platoon and continue driving to its destination.
705
Detect a guiding vehicle.
706
Order the vehicle to leave the platoon and join guiding vehicle, for driving to the destination.
707
Detect an approaching vehicle.
708
END

Fig. 7

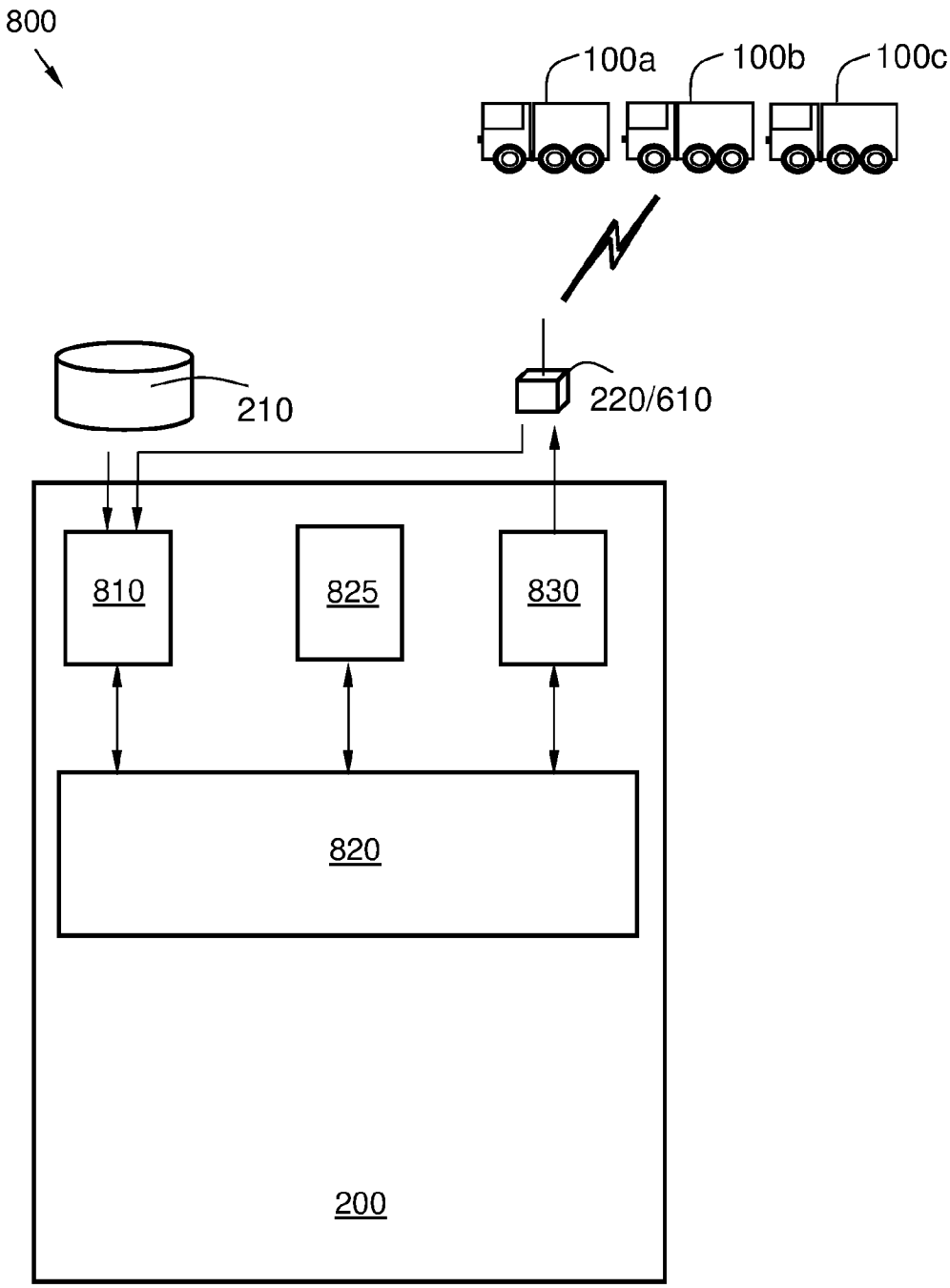

Fig. 8

INTERNATIONAL SEARCH REPORT

International application No.
PCT/SE2018/051292

A. CLASSIFICATION OF SUBJECT MATTER

IPC: see extra sheet

According to International Patent Classification (IPC) or to both national classification and IPC

B. FIELDS SEARCHED

Minimum documentation searched (classification system followed by classification symbols)

IPC: B60W, G05D

Documentation searched other than minimum documentation to the extent that such documents are included in the fields searched

SE, DK, FI, NO classes as above

Electronic data base consulted during the international search (name of data base and, where practicable, search terms used)

EPO-Internal, PAJ, WPI data, COMPENDEX, EMBASE, INSPEC, IBM-TDB

C. DOCUMENTS CONSIDERED TO BE RELEVANT

Category*	Citation of document, with indication, where appropriate, of the relevant passages	Relevant to claim No.
X	US 20130041576 A1 (SWITKES JOSHUA P ET AL), 14 February 2013 (2013-02-14); paragraphs [0003], [0010], [0035]-[0036], [0050]; figure 8	1, 2, 4-6, 9, 10, 12-14, 17-20
Y	--	3, 7, 8, 11, 15, 16
Y	WO 2015047182 A1 (SCANIA CV AB), 2 April 2015 (2015-04-02); page 12, line 17 - page 12, line 25	3, 8, 11, 16
	--	
Y	WO 2017164792 A1 (SCANIA CV AB), 28 September 2017 (2017-09-28); page 20, line 5 - page 20, line 15	7, 15
	--	

☒ Further documents are listed in the continuation of Box C. ☒ See patent family annex.

* Special categories of cited documents:
"A" document defining the general state of the art which is not considered to be of particular relevance
"E" earlier application or patent but published on or after the international filing date
"L" document which may throw doubts on priority claim(s) or which is cited to establish the publication date of another citation or other special reason (as specified)
"O" document referring to an oral disclosure, use, exhibition or other means
"P" document published prior to the international filing date but later than the priority date claimed
"T" later document published after the international filing date or priority date and not in conflict with the application but cited to understand the principle or theory underlying the invention
"X" document of particular relevance; the claimed invention cannot be considered novel or cannot be considered to involve an inventive step when the document is taken alone
"Y" document of particular relevance; the claimed invention cannot be considered to involve an inventive step when the document is combined with one or more other such documents, such combination being obvious to a person skilled in the art
"&" document member of the same patent family

Date of the actual completion of the international search	Date of mailing of the international search report
11-03-2019	11-03-2019

Name and mailing address of the ISA/SE
Patent- och registreringsverket
Box 5055
S-102 42 STOCKHOLM
Facsimile No. + 46 8 666 02 86

Authorized officer
Kristin Wiklund
Telephone No. + 46 8 782 28 00

INTERNATIONAL SEARCH REPORT

International application No.
PCT/SE2018/051292

C (Continuation). DOCUMENTS CONSIDERED TO BE RELEVANT

Category*	Citation of document, with indication, where appropriate, of the relevant passages	Relevant to claim No.
A	US 20100256852 A1 (MUDALIGE UPALI PRIYANTHA), 7 October 2010 (2010-10-07); paragraph [0085] --	1-20
A	US 20090157461 A1 (WRIGHT GEORGE L ET AL), 18 June 2009 (2009-06-18); paragraphs [0027]-[0029] --	1-20
A	US 20140107867 A1 (YAMASHIRO TAKAHISA), 17 April 2014 (2014-04-17); abstract --	1-20
A	WO 2016109670 A1 (BOSCH GMBH ROBERT), 7 July 2016 (2016-07-07); abstract --	1-20
A	US 20140316865 A1 (OKAMOTO KAZUYA), 23 October 2014 (2014-10-23); paragraphs [0009]-[0012] --	1-20

International application No.
PCT/SE2018/051292

Continuation of: second sheet

International Patent Classification (IPC)

G05D 1/02 (2006.01)
B60W 30/10 (2006.01)
B60W 30/16 (2012.01)
B60W 30/18 (2012.01)

US	20130041576	A1	14/02/2013	CA	2841067	A1	10/01/2013
				US	20190041870	A1	07/02/2019
				US	10162366	B2	25/12/2018
				US	20180314267	A1	01/11/2018
				US	10042365	B2	07/08/2018
				US	20180074514	A1	15/03/2018
				US	20170261997	A1	14/09/2017
				US	9665102	B2	30/05/2017
				US	9582006	B2	28/02/2017
				US	20140303870	A1	09/10/2014
				US	20130066511	A1	14/03/2013
				US	8744666	B2	03/06/2014
WO	2015047182	A1	02/04/2015	EP	3053156	A4	05/07/2017
				SE	537598	C2	14/07/2015
				SE	1351132	A1	31/03/2015
WO	2017164792	A1	28/09/2017	DE	112017000910	T5	31/10/2018
				SE	539788	C2	28/11/2017
				SE	1650383	A1	23/09/2017
US	20100256852	A1	07/10/2010	CN	101859494	B	28/08/2013
				DE	102010013647	B4	31/05/2012
				US	8352112	B2	08/01/2013
				US	20100256836	A1	07/10/2010
				US	20100256835	A1	07/10/2010
				US	8676466	B2	18/03/2014
				US	8352111	B2	08/01/2013
US	20090157461	A1	18/06/2009	EP	2166492	A3	25/01/2012
US	20140107867	A1	17/04/2014	JP	2014078170	A	01/05/2014
				JP	6015329	B2	26/10/2016
				US	9779628	B2	03/10/2017
WO	2016109670	A1	07/07/2016	US	20170371333	A1	28/12/2017
US	20140316865	A1	23/10/2014	JP	2014211714	A	13/11/2014
				JP	5737316	B2	17/06/2015
				US	9396661	B2	19/07/2016