April 21, 1953 H. R. JOHNSON 2,635,396

PORTABLE RUBBING MACHINE

Filed June 2, 1949 4 Sheets-Sheet 1

Fig. 1

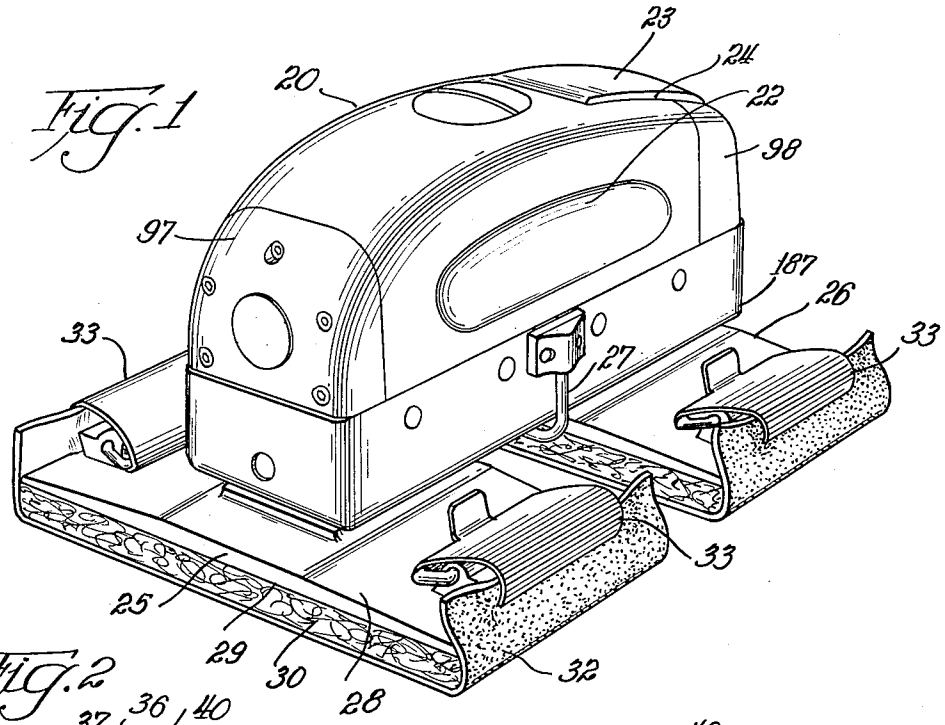

Fig. 2

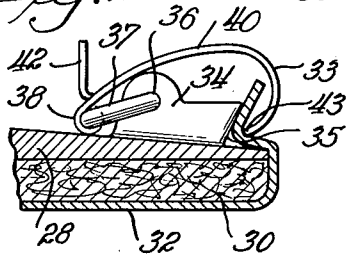

Fig. 3

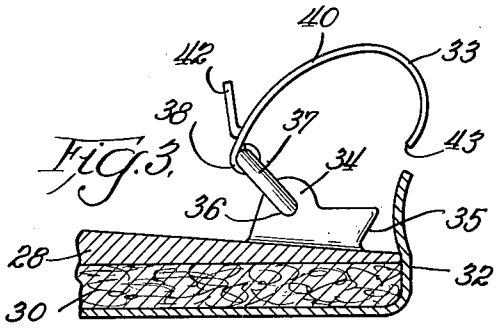

Fig. 4

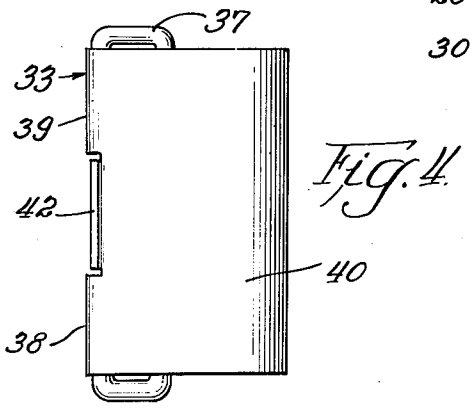

INVENTOR.

Harold R. Johnson

BY

Albert G. McCaleb

Abby.

April 21, 1953 H. R. JOHNSON 2,635,396

PORTABLE RUBBING MACHINE

Filed June 2, 1949 4 Sheets-Sheet 2

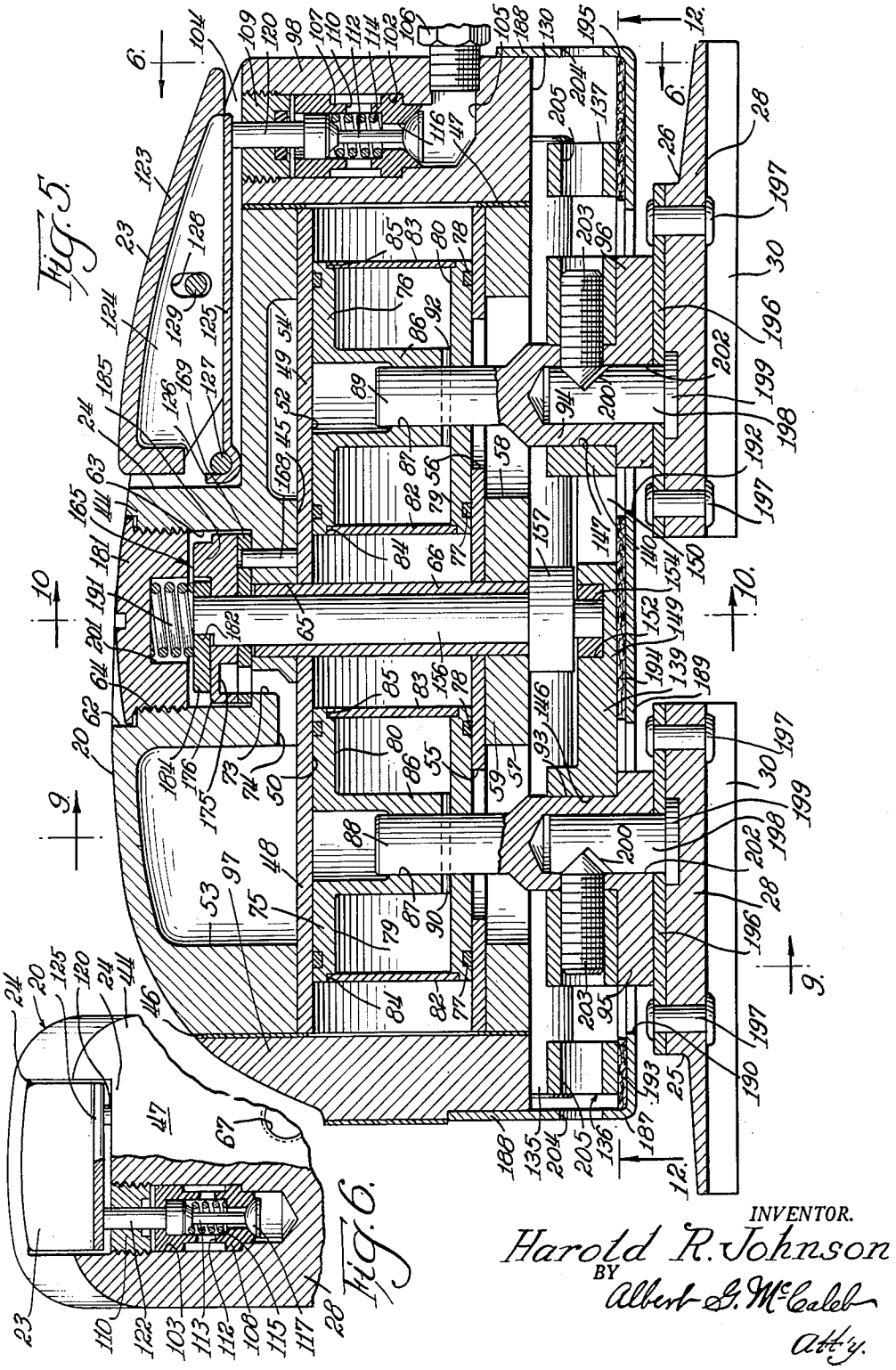

Fig. 5.

Fig. 6.

INVENTOR.
Harold R. Johnson
BY
Albert G. McCaleb
Atty.

April 21, 1953 H. R. JOHNSON 2,635,396

PORTABLE RUBBING MACHINE

Filed June 2, 1949 4 Sheets-Sheet 3

Fig. 7.

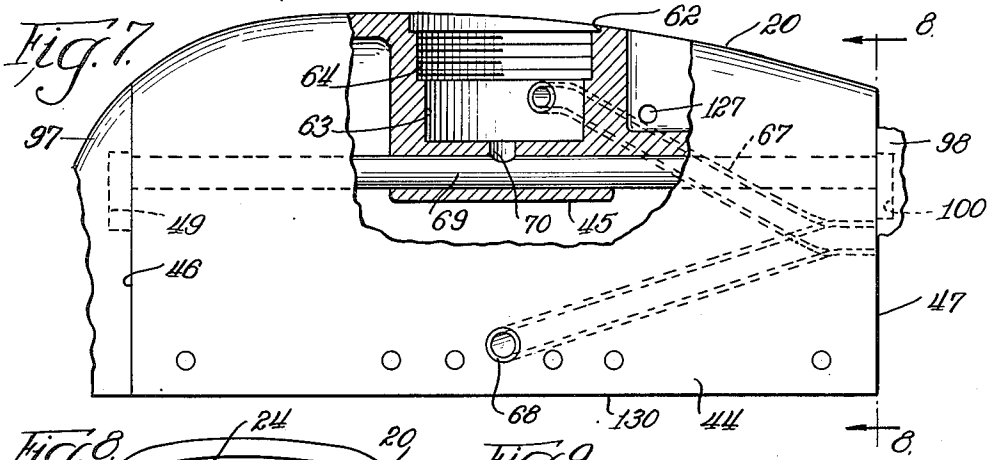

Fig. 8.

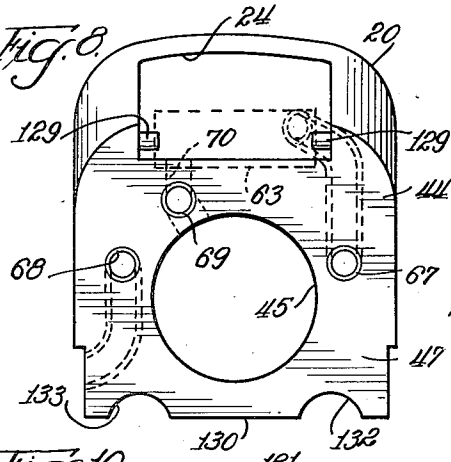

Fig. 9

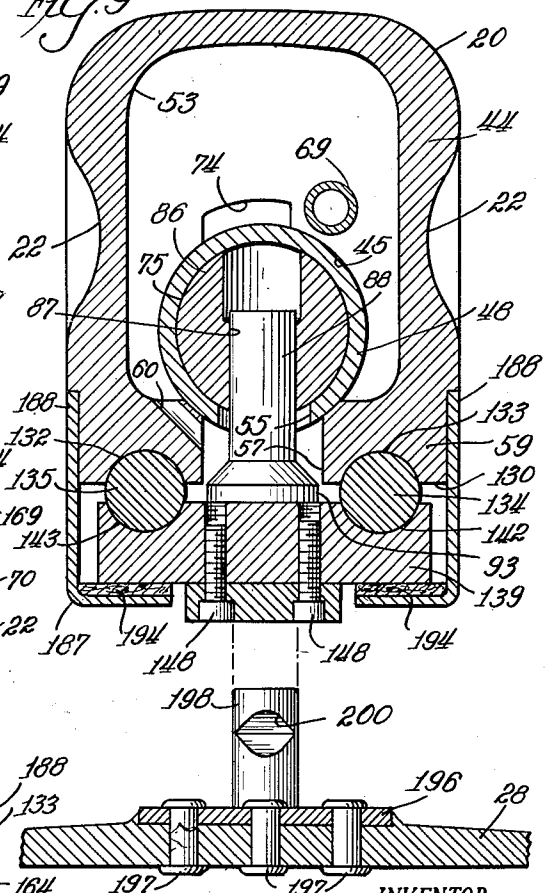

Fig. 10

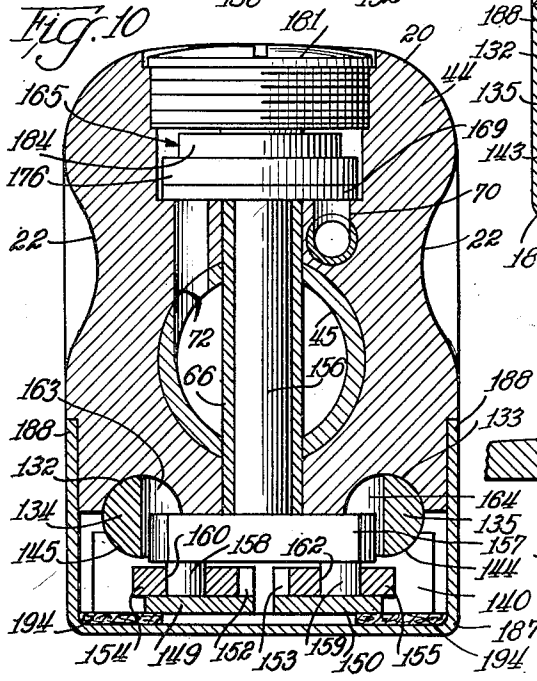

INVENTOR.

Harold R. Johnson

BY Albert G. McCaleb

Atty.

April 21, 1953 H. R. JOHNSON 2,635,396

PORTABLE RUBBING MACHINE

Filed June 2, 1949 4 Sheets-Sheet 4

Fig. 11.

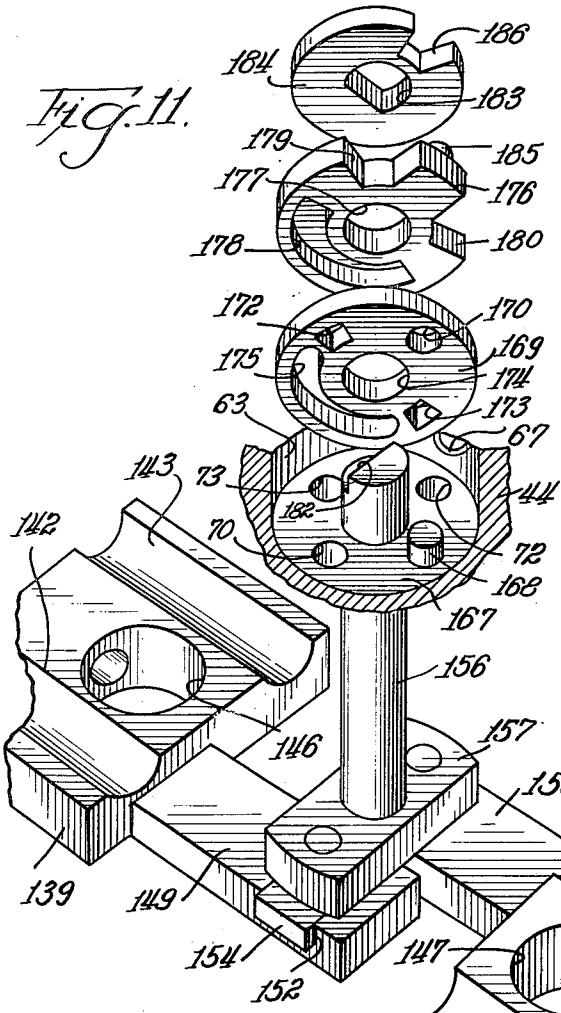

Fig. 13.

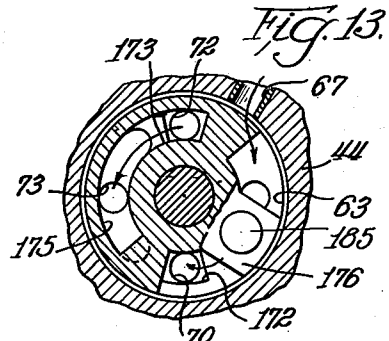

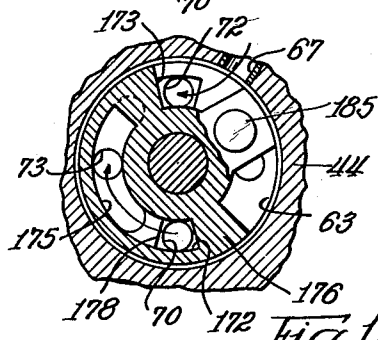

Fig. 14.

Fig. 12.

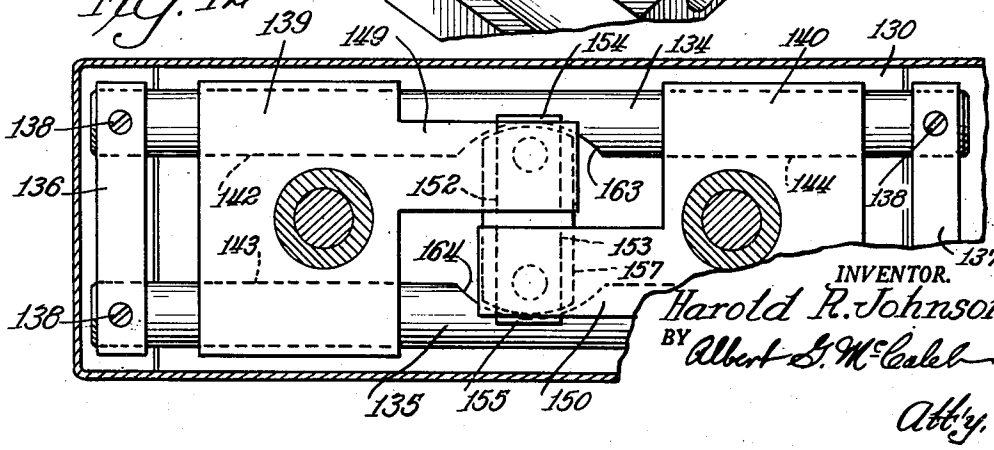

INVENTOR.
Harold R. Johnson
BY Albert G. McCalel
Atty.

Patented Apr. 21, 1953 2,635,396

UNITED STATES PATENT OFFICE

2,635,396

PORTABLE RUBBING MACHINE

Harold R. Johnson, Rockford, Ill., assignor, by mesne assignments, to The Porter-Cable Machine Company, Syracuse, N. Y., a corporation of New York

Application June 2, 1949, Serial No. 96,671

1 Claim. (Cl. 51—170)

1

This invention relates to portable rubbing machines, and more particularly to such machines which are operated by fluid under pressure and adapted to manual manipulation for sanding, polishing and the like.

One of the objects of my invention is to provide a portable fluid operated rubbing machine wherein the actuating parts are built into the body of the machine, and wherein tubes are cast into the body to provide fluid passages, thereby avoiding the necessity of a sizable number of relatively difficult and costly drilling operations.

As another object, my invention has within its purview the provision of a fluid operated rubbing machine having an actuating mechanism built into the body of the machine and so constructed and arranged that the machine body serves as an exhaust muffler.

My invention has for another object the provision of a piston actuated, fluid operated rubbing machine in which the piston movements and energy are transferred directly to the rubbing surface.

It is a further object of the invention to provide a fluid operated rubbing machine embodying a valve having relatively few parts of rugged construction and which is mounted for ready and convenient access.

I have further provided, in the disclosed rubbing machine, a manually operable actuating element for controlling the operation of the machine, which actuating element is normally biased to a position such that the machine is shut off, and which is disposed and contoured relative to the portion of the machine normally gripped in use so that normal gripping pressures effect control of the machine operation with negligible conscious effort and no appreciable discomfort.

The structure of my rubbing machine adapts it to both wet and dry rubbing operations and is such that the liquid for wet rubbing operations is fed through the body of the machine and discharged at an effective position relative to the rubbing surfaces by an attached jet, and in addition to which, the flow of liquid, as well as the operation of the machine may be controlled by a control member on the machine body.

It is further within the purview of this invention to provide relatively inexpensive, but effective and quickly operable clips for holding rubbing surface material in place on the rubbing shoes of my rubbing machine.

Other objects and advantages of the invention will be apparent from the following description

2

and the accompanying drawings in which similar characters of reference indicate similar parts throughout the several views.

Referring to the four sheets of drawings,

Fig. 1 is a perspective view taken from one end and to one side of a portable rubbing machine embodying a preferred form of this invention;

Figs. 2 and 3 are fragmentary end elevational views of a portion of the structure illustrated in Fig. 1 and wherein different positions of movable parts are illustrated;

Fig. 4 is a top plan view of the structure shown in Fig. 2;

Fig. 5 is a general and substantially central side sectional view of the portable rubbing machine illustrated in Fig. 1;

Fig. 6 is a fragmentary end view with a portion cut away and taken substantially at the position indicated by a line 6—6 in Fig. 5 when viewed as indicated by accompanying arrows;

Fig. 7 is a fragmentary side elevational view of a portion of the structure shown in Fig. 5 and wherein a part is cut away to illustrate certain details of internal structure;

Fig. 8 is an end elevational view taken substantially as indicated by a line 8—8 in Fig. 7 and accompanying arrows;

Fig. 9 is a sectional view taken substantially on a line 9—9 of Fig. 5 and viewed in the direction indicated by the arrows;

Fig. 10 is a sectional view taken substantially on a line 10—10 of Fig. 5 and in the direction indicated by arrows;

Fig. 11 is a fragmentary, perspective, exploded view depicting certain preferred forms of parts and indicating their preferred order and arrangement in assembly for use in my portable rubbing machine;

Fig. 12 is a bottom plan view taken substantially at the position indicated by a line 12—12 in Fig. 5 and in the direction of the accompanying arrows; and

Figs. 13 and 14 are fragmentary top sectional views depicting different operating positions of parts of the structure which are illustrated in Fig. 11.

In general, the exemplary embodiment of my portable rubbing machine, which is shown in the accompanying drawings for illustrative purposes, includes a body 20 exteriorly contoured with smooth and rounded curves and with side indentations such as 22, so that the body, in addition to other purposes, serves as a hand grip by which the machine is manipulated in use.

At one end of the top of the body, an actuator **23** is movably mounted in recess **24** for controlling the operation of the machine. By preference, this actuator is nearly flush with the adjoining surfaces of the body and conforms generally to the body contours, so that it is not only accessible for operation by a convenient gripping action, but also so that its projection beyond the body surface is insufficient to cause damage to internal and associated parts in case the machine is dropped. The disclosed machine is adapted to operation by air under pressure, and is suited to either wet or dry rubbing operations. The body serves as a block or stationary part of an air operated motor including reciprocating parts to which rubbing shoes **25** and **26** are attached; the rubbing shoes **25** and **26** being normally in spaced relationship to one another and preferably driven in opposed cycles of reciprocating movements. A liquid jet **27** is secured to one side of the body and extends between the rubbing shoes for applying liquid to the surface of the workpiece during wet rubbing operations.

The rubbing shoes **25** and **26** are alike in their structure, so that a description of one will suffice for both. Each embodies a shoe plate **28** of generally rectangular shape and has a substantially plane bottom surface **29** to which a pad **30** of a relatively soft material, such as rubber or felt, is secured for most rubbing operations. Sheet material **32**, such as sand paper, is removably applied to the rubbing shoes, so that it covers the exposed face of the pad and extends upwardly over the exposed opposite ends of the rubbing shoes, as shown in Fig. 1. At those exposed opposite ends of each of the rubbing shoes, manually releasable clips **33** are utilized to secure the sheet material to the rubbing shoes.

As depicted in Figs. 1 to 4 inclusive, my preferred clip structure includes a block **34** and is secured to or integrally formed upon the top surface of the rubbing shoe plate. This block presents an end gripping surface **35** facing toward the adjacent end of the shoe plate and is preferably disposed in acute angular relationship to the top surface of the shoe plate. Also, the block is preferably disposed at a position such that the gripping surface **35** thereof is displaced inwardly from the adjacent end surface of the shoe plate. At a position spaced from the gripping surface **35**, the block has a bearing bore **36** therein, the axis of which is substantially parallel to the gripping surface **35**. A link **37** of elongated and generally rectangular shape has one side supported for limited rotational movement in the bearing bore **36** of the block. The opposite side of the link is movably engaged by loops **38** and **39** which are integrally formed at opposite ends of a substantially C-shaped clip element **40**, which clip element is preferably made of formed sheet metal possessing some resilience.

A tab **42** is integrally formed on the clip element **40** and projects upwardly from a position between the loops **38** and **39** to provide a handle for actuating the clip between the closed and open positions depicted in Figs. 2 and 3 respectively. The block, link and clip element are so disposed and proportioned that a gripping edge **43** of the clip element firmly and tightly engages a marginal portion of the sheet material when the link is swung to a position away from the gripping surface **35** of the block and adjacent the top face of the shoe plate **28**, whereby the sheet material is gripped between the gripping edge **43** and gripping surface **35**, as shown in Fig. 2. By swinging the link upwardly with the aid of the tab **42**, as shown in Fig. 3, the sheet material is quickly released. It may be noted that as the clip element moves toward its gripping position, it tends to draw the sheet material tautly across the face of the rubbing shoe pad **30**.

Referring more particularly to Figs. 5 to 10 inclusive, of the drawings, the body **20** of my portable rubbing machine is a block-like cast metal structure which is designed not only for neat and streamlined appearance and convenience in use, but also with a view to minimizing weight and materially lessening necessary machining operations such as drilling. A main block **44** has a longitudinal bore **45** extending therethrough from a plane end surface **46** to an opposed plane end surface **47**. At the ends of the longitudinal bore **45**, cylinder liners **48** and **49**, in the form of cylindrical shells, are pressed into the bore to define coaxial cylinders **50** and **52**. Internal cavities **53** and **54** in the main block **44** encompass top and side portions of the cylinder liners **48** and **49** respectively to limit the weight of the body, as well as to afford longitudinal balance; the cavity **53** being larger than the cavity **54**, which latter cavity is adjacent the recess **24** at one end of the block.

At the mid-portions of each of the cylinder liners **48** and **49**, and at what is normally the bottom side of the machine, longitudinally elongated slots **55** and **56** extend through the cylinder liners. Aligned with those slots, and also aligned longitudinally of the body, slots **57** and **58** extend through a bottom wall **59** of the main block. As depicted in Fig. 9, a passage **60** in the main block provides communication for the flow of air from the cavity **53** to the slot **57**.

At the mid-portion of the block and at what is normally the top thereof, a recess **62** provides a valve cavity having a substantially cylindrical lower portion **63** and a threaded upper portion **64**. Coaxially with the valve cavity, a bearing bore **65** extends through the body in a direction lateral to the axis of the longitudinal bore **45**. A sleeve bearing **66** is mounted in the former bore and extends across the mid-portion of the longitudinal bore between the cylinder liners **48** and **49**.

In order to minimize drilling operations in the main block and particularly in the instance of longer passages and those having angularly disposed portions which would complicate the drilling of such passages, the disclosed structure includes metal tubes which are positioned in the mold for the block, so that those tubes are cast into the block when it is made. As depicted in Figs. 6, 7 and 8, a tube **67** is cast into the main block to provide an air flow passage extending from one side of the plane end surface **47** to the cylindrical lower portion **63** of the valve cavity. Another tube **68** extends from the plane end surface **47** of the block to the mid-portion of one side of the block near the bottom thereof to provide a passage for the flow of liquid utilized in wet rubbing operations. As shown in Figs. 7, 8 and 9, a third tube **69** extends from one end surface of the main block to the other in substantially parallel relationship to the main bore **45**. A drilled passage **70** provides communication for the flow of air from the lower surface of the valve cavity to the tube **69**. Another drilled passage **72** extends from the lower surface of the valve cavity to main bore **45** at the mid-portion of that main bore. Still another drilled passage **73** which communicates with the valve cavity, as shown in Fig.

5, adjoins an angularly disposed passage 74 to provide communication between the valve cavity and the internal cavity 53 in the main block.

Pistons 75 and 76 are mounted for reciprocating movement and in opposed relationship in the cylinder bores 50 and 52 provided by the cylinder liners 48 and 49 at the opposite ends of the longitudinal bore 45. Piston rings 77 and 78 at opposite ends of each of the pistons, and mounted in ring grooves, serve to prevent leakage of air under pressure around the respective pistons. In order to minimize the vibration effected by rapid reciprocation of the pistons within the cylinder bores, as well as to improve mechanical efficiency and limit the overall weight of the machine, I prefer to use pistons of like structure having hollow end portions 79 and 80 which are closed at opposite ends of the pistons by metal disks 82 and 83 pressed into annular recesses 84 and 85 at the opposite ends of the respective pistons. The lengths and strokes of the pistons are so related to the lengths of the slots 55 and 56 in the cylinder liners that the pistons cover those slots at all points of their respective travel strokes. Midway between their respective ends, partitions 86, of substantial thickness, extend laterally across the pistons between their hollow end portions. These partitions have lateral bores 87 therethrough which are adapted to receive end portions of driving posts 88 and 89 with a running fit; those driving posts preferably being secured in place with respect to the pistons by pins 90 and 92 extending through the posts and longitudinally of the piston partitions. The driving posts 88 and 89 extend outwardly of the main block through the slots 55 and 56 in the cylinder liners and through the aligned slots 57 and 58 in the block. At their exposed ends, the driving posts, in the disclosed structure, have slide receiving shank portions 93 and 94, as well as shoe supporting feet 95 and 96 integrally formed thereon.

Although the opposed cylinder bores for the respective pistons could be completely segregated from one another by a partition with separate air openings and valve ports to provide for the flow of air to and from the spaces at the ends of the two pistons, the valve structure is simplified and the number of required passages and ports minimized by eliminating such partition as in the disclosed structure, so that the air for operation is fed between and exhausted from the space between the opposed ends of the two pistons. It being my preference that the pistons shall move through opposed cycles during operation, it may be readily understood that the introduction of air under pressure between the opposed ends of the pistons effects their outward movements in opposite directions. At the opposite ends of the main block, the cylinder bores are closed by end caps 97 and 98. As shown in Fig. 7, the end caps 97 and 98 have channels 99 and 100 in their inner faces for providing communication between the opposite ends of the tube 69 and the outer ends of the cylinder bores, whereby air under pressure fed through the tube 69 effects opposed and inward movement of the pistons, while outward movement of the pistons exhausts the air through that same tube.

As shown in Figs. 5 and 6, the end cap 98 of the disclosed structure has adjacent and substantially parallel valve ports 102 and 103 extending inwardly from a top recess 104 which forms a continuation of the recess 24 in the block.

The bottom of each recess communicates with a lateral bore, such as 105, extending to the outside of the end cap and adapted to receive a threaded fitting such as 106 on a hose line or the like. Valve seats 107 and 108 are mounted within the ports 102 and 103 and are held in place therein by screw plugs 109 and 110. Movable valve elements 112 and 113 are carried by the valve seats 107 and 108 and are biased by springs 114 and 115 to position such that they normally close passages 116 and 117 in the valve seats. The valve seat 107 has a passage 118 therein which communicates with the end of the tube 67, so that the valve is adapted to control the flow of air therethrough to the valve cavity 62. Likewise, the valve seat 108 has a passage 119 therein which communicates with one end of the tube 68 to control the flow of liquid through that tube during wet rubbing operations. Stems 120 and 122 extend from the movable valve elements 112 and 113 through the screw plugs 109 and 110 and project into the recess 104 in adjacent relationship.

Although separate actuating members might be provided for effecting manual control of the movable valve elements 112 and 113, I prefer to actuate both valves by the single actuator 23, so that the flow of liquid for wet rubbing operating is controlled simultaneously with the control of the air which effects operation of the rubbing machine. The actuator 23, in the disclosed structure, comprises a shell having an exposed wall 123 which conforms to the general contour of the body, and side walls 124 which extend into the aligned recesses 24 and 104 in the block and end cap. A leaf 125 secured to the lower surfaces of the side walls 124 of the actuator has a curved portion 126 at one end which engages a cross pin 127 at the inner end of the recess, so as to support the actuator for limited rocking movement within the recess. At the end of the leaf opposite the pin 127, that leaf engages the projecting ends of the stems 120 and 122. Intermediate the ends of the actuator, aligned slots 128 are provided in the side walls, which slots engage inwardly projecting studs 129 on opposite sides of the recess to guide the actuator and limit the outward movement thereof. It may be observed that the valve springs 114 and 115, in addition to biasing the movable valve elements to their closed positions, normally bias the actuator to a position projecting outwardly somewhat from the walls of the body. Thus, inward movement of the actuator by the manual operation of pressure thereto opens both the air and liquid valves.

Externally of the body, the bottom wall 59 preferably presents a substantially plane surface 130. As illustrated in Figs. 5, 9, 10 and 12, that bottom wall 59 of the body is provided with grooves 132 and 133 which are equally spaced on opposite sides of the slots 57 and 58 and extend longitudinally of the body in substantially parallel relationship to the axis of the longitudinal bore 45. In the present instance, these grooves are arcuate in shape and are of a depth substantially less than a semi-circle. They carry slide bars 134 and 135 of circular section which are secured in place by end cross clamping strips 136 and 137 held in place by fastening means, such as screws 138. As shown in Figs. 5, 9, 10, 11 and 12, a slide 139 has parallel and arcuate grooves 142 and 143 therein which are adapted to fit for sliding movement at one end of the slide bars 134 and 135. Likewise, a slide 140 has parallel and arcuate grooves 144 and 145 therein

which are adapted to fit for sliding movement at the other ends of the slide bars 134 and 135. In the assembly, as depicted in Figs. 5 and 9, openings 146 and 147 in the slides fit onto the shank portions 93 and 94 of the drive posts 88 and 89 and are secured in place against the feet 95 and 96 on those posts by fastening means, such as screws 148.

Substantially parallel arms 149 and 150 project from adjacent ends of the slides 139 and 140 respectively and are normally disposed with their end portions in adjacent and side-by-side relationship. At their adjacent ends and in opposed relationship, the arms 149 and 150 have lateral channels 152 and 153 therein, which channels carry slide blocks 154 and 155 for sliding movement in a direction lateral to the sliding movements of the slides 139 and 140. An oscillator shaft 156 is journalled in the sleeve bearing 66. At one end, this oscillator shaft has a cross head 157 drivingly secured thereto, while the other end thereof extends into the valve cavity 62. At its opposite ends, the cross head 157 has studs 158 and 159 projecting therefrom and extending into bearing bores 160 and 162 in the slide blocks 154 and 155 respectively. As depicted in Figs. 10 and 12, the slide bars 134 and 135 have arcuate notches 163 and 164 at their mid-portions, that they clear the opposite ends of the cross head 157. Since the driving posts 88 and 89 are directly secured to the pistons 75 and 76, reciprocating movement of those pistons produces similar reciprocating movements of the slides 139 and 140. The arms 149 and 150 move with the slide and in opposed directions to effect oscillatory rotational movements of the cross head 157 and oscillator shaft 156; it being understood that the slide blocks 154 and 155 provide compensation between the linear movements of the arms 149 and 150 and the arcuate movements of the studs 160 and 162 which are carried by cross head 157.

In addition to serving as guides for the movements of the rubbing shoes, the slides 139 and 140 act through the arms 149 and 150 to effect oscillating rotational movements of the oscillator shaft 156, the function of which shaft is to drive an operating valve 165 which is disposed in the valve cavity 62 for controlling the flow of air to and from the cylinder bores at opposite ends of the pistons in timed relationship to the piston movements. As shown in Figs. 11, 13 and 14, the valve cavity 62 has a plane bottom surface 167 through which the passages 70, 72 and 73 pass in spaced relationship to one another. In the disclosed structure, the passages 70, 72 and 73 are concentrically disposed and are spaced at positions substantially 90° apart with respect to the axis of the oscillator shaft 156. In spaced relationship with respect to those openings, a pin 168 is mounted in an opening in the main block and projects into the valve recess at a position spaced from the oscillator shaft.

In order to prevent wear on a portion of the block itself and so as to provide a replaceable and hardened wearing element, a stationary valve plate 169 is mounted in the valve cavity against the plane bottom surface 167; that stationary valve plate having an opening 170 therein which fits snugly upon the pin 168 to hold it stationary. In alignment with the passages 70 and 72, the stationary valve plate has ports 172 and 173 extending axially therethrough, which ports preferably have straight side edges to improve their closing and opening actions. At the center, the stationary valve plate has an opening 174 through which the oscillator shaft 156 extends. Between the ports 172 and 173 and in communication with the passage 73, the stationary plate has an arcuate slot 175 therein.

A valve rotor 176 has a central opening 177 therein through which the oscillator shaft 156 extends for free rotational movement relative thereto. This valve rotor embodies an arcuate channel 178 in its lower surface which is adapted to provide communication between the arcuate slot 175 and one or the other of the ports 172 or 173 in the stationary valve plate 169. The channel 178 does not extend through the movable valve rotor, because its primary purpose is to provide communication to the exhaust passage 73 through which air is released from one end of each of the pistons, while air under pressure is fed to the other end thereof. On the other hand, notches 179 and 180 are provided at spaced positions separated from the ends of the channel 178 to control the flow of air to one or the other of the ports 172 or 173. In respect to the use of the channel for controlling the flow of air to the exhaust passage, as contrasted with the use of notches in the movable valve plate for controlling the flow of air to the inlet ports, it is to be recalled that the valve cavity, during operation, contains air under pressure which is fed thereto through the tube 67. The two extreme positions of the movable valve plate are illustrated in Figs. 13 and 14. In Fig. 13, air under pressure from the passage provided by the tube 67 is being supplied to the outer ends of the cylinders through the passage 70, while air is being exhausted from between the pistons through the passage 72 and the passage 73. In the position shown in Fig. 14, the exhaust is from the ends of the cylinders, while the input of air under pressure is directed to the space between the pistons.

In connection with the exhausted air, it may be observed that such air flowing outwardly through the passage 73 in the valve cavity and passage 74, as depicted in Figs. 5 and 9, flows into the cavity 53 in the body. From that cavity, as shown in Fig. 9, it flows through the passage 60 into the slot 57, from which it escapes from the lower portion of the machine around the slides and adjacent the shoes. Thus, the body serves as a muffler for quieting the operation of the machine.

As has been explained, the oscillator shaft 156 is driven in timed relationship to the movements of the pistons. As shown in Figs. 5 and 11, the oscillator shaft has a notched end 182 presenting a flat driving surface within the valve cavity. This notched end fits into a correspondingly shaped opening 183 in a valve actuating cam 184. In the assembly of the valve, the movable valve plate 176 rests upon the stationary valve plate 169 and the valve cam is disposed against the movable valve plate 176 while engaging the notched end 182 of the oscillator shaft. Also, the movable valve plate 176 has a stud 185 projecting upwardly from the top surface thereof between the notches 179 and 180, which stud is disposed in a slot 186 in the cam 184. With this combination of structure, the movable valve part is driven in timed relationship to the piston movements and thereby effects an efficient and effective alternation of the flow of pressure and exhaust air to and from the cylinders at opposite ends of the pistons, so as to produce reciprocating movements of the pistons in opposed cycles. In order to hold the valve parts in their assembled relationship, as

shown in Fig. 5, as well as for sealing the valve cavity, a valve cap 181 is threaded into the upper portion 64 of the valve cavity. A compression spring 191 is disposed between the valve cap 181 and the cam 184 in a recess 201 in that valve cap, whereby to urge the valve parts into firm engagement. The valve structure is readily disassembled by removal of the cap 181, so that the spring and valve parts are readily accessible.

As shown in Figs. 5, 9 and 10, it is my preference to provide an apron 187 having side flanges 188 which fit over lower marginal portions of the machine body, as well as a face portion 189 which covers the slides and has openings 190 and 192 therein for passage of the feet 95 and 96 therethrough. Pads 193, 194 and 195 of felt or the like are interposed between the face portion of the apron and the lower faces of the slides and arms. These pads, in addition to controlling the outward flow of exhaust air during operation of the machine, serve to prevent dust and dirt from getting into the operating parts of the machine.

In addition to the previously described shoe plates 28 and pads 30, each of the shoes 25 and 26 has a top plate 196 secured thereto by fastening means, such as rivets 197, as shown in Fig. 5. A shoe supporting stud 198 having a head portion 199 is held in place and extends upwardly from each of the shoes to serve as a mounting element for securing the shoes to the feet 95 and 96. A notch 200 is provided in one side of each of the studs. Also, the feet 95 and 96 have axial openings 202 therein which snugly fit the projecting studs. For securing the rubbing shoes in place, a set screw 203 is threaded into an outside end of each of the slides and has a tapered end adapted to engage the notch 200 in the stud to draw that stud inwardly as the screw is tightened. Aligned openings 204 and 205 in the apron and clamping straps provide access to the ends of the set screws for effecting the removal and installation of the shoes relative to the machine.

While I have illustrated a preferred embodiment of my invention, many modifications may be made without departing from the spirit of the invention, and I do not wish to be limited to the precise details of construction set forth, but desire to avail myself of all changes within the scope of the appended claim.

Having thus described by invention, what I claim as new and desire to secure by Letters Patent of the United States, is:

A portable rubbing machine adapted to operation by air under pressure and comprising, in combination, a cast body exteriorly contoured to provide a hand grip and having a longitudinal bore extending therethrough, a cylinder liner defining a cylinder and mounted in each end of the longitudinal bore, said body having cavities therein partially encompassing the mid-portions of the cylinder liners, said body and the cylinder liners also having aligned slots therein opening outwardly opposite the cavities and a passage providing communication from one of the cavities to one of the slots, double acting pistons mounted for reciprocating movement in the cylinders and covering the slots in all positions of the pistons, end caps secured to opposite ends of the body for closing the opposite ends of the cylinders, one of said end caps having an air flow passage therethrough and a valve therein for controlling the flow of air through the passage, said body having a valve cavity therein near the mid-portion of the longitudinal bore and normally closed by a removable cap to form a valve chamber, said body having passages therein for the flow of air from the air passage in said one of the end caps to the valve chamber and from the valve chamber to opposite ends of the cylinders, additional passages in the body for the flow of air from the valve chamber to the longitudinal bore at a position between the pistons and from the valve chamber to one of the cavities, a valve in said chamber for effecting air flow in alternating sequence to the cylinders at opposite ends of the bore end and to the longitudinal bore between the pistons, the last mentioned valve also controlling the exhaust of air alternately from opposite ends of the cylinders to said one of the cavities, a slide and a rubbing shoe having substantially a direct and straight line connection to each of the pistons for actuation thereby, and means actuated by the slides for moving the last mentioned valve in timed relationship to the movements of the pistons, said last mentioned valve including a stationary plate having a single exhaust port and two inlet ports therein, a valve rotor engaging the stationary plate and having notches and a passage therein proportioned and disposed with respect to the exhaust and inlet ports in the stationary plate so as alternately to connect one of the inlet ports to the exhaust port while alternately exposing the other inlet ports to air under pressure in the valve chamber, a valve cam for actuating the valve rotor, and a shaft connected to the slides for effecting oscillatory movement of the cam.

HAROLD R. JOHNSON.

References Cited in the file of this patent

UNITED STATES PATENTS

Number	Name	Date
1,524,902	Anderson	Feb. 3, 1925
1,700,115	Thompson	Jan. 22, 1929
1,737,135	Windfelt	Nov. 26, 1929
1,747,396	Scott	Feb. 18, 1930
1,839,118	Plancq	Dec. 29, 1931
2,214,189	Ahlskog	Sept. 10, 1940
2,251,329	Ekstrom	Aug. 5, 1941
2,477,807	Johnson	Aug. 2, 1949
2,530,301	Hoy	Nov. 14, 1950