Dec. 2, 1924.

1,517,956

O. L. COMPTON

FAUCET

Filed July 31, 1922 3 Sheets-Sheet 1

Fig. 1.

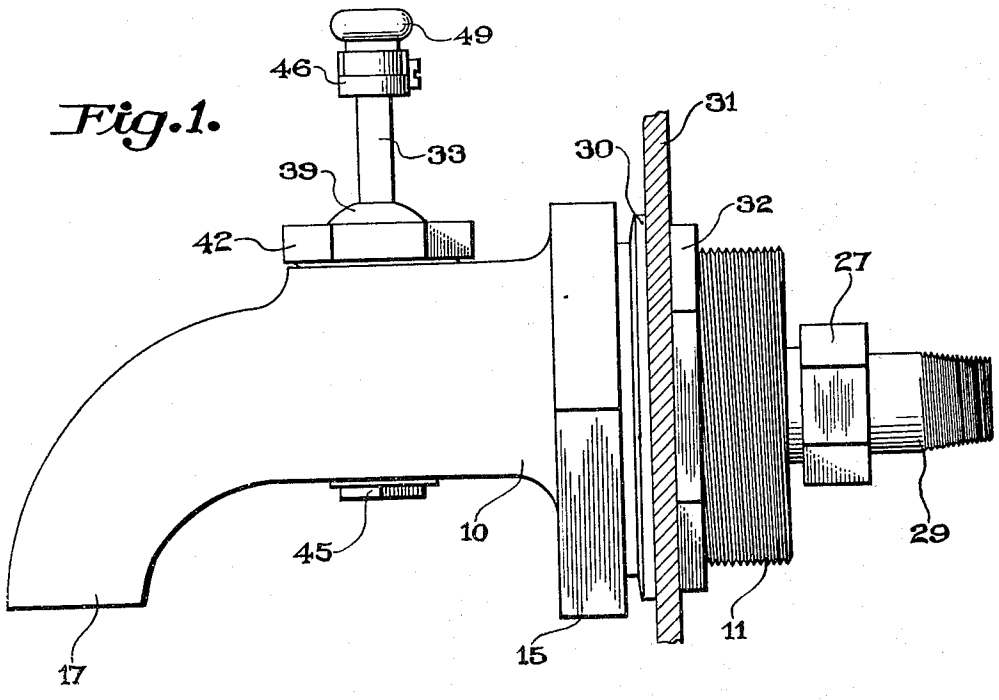

Fig. 2.

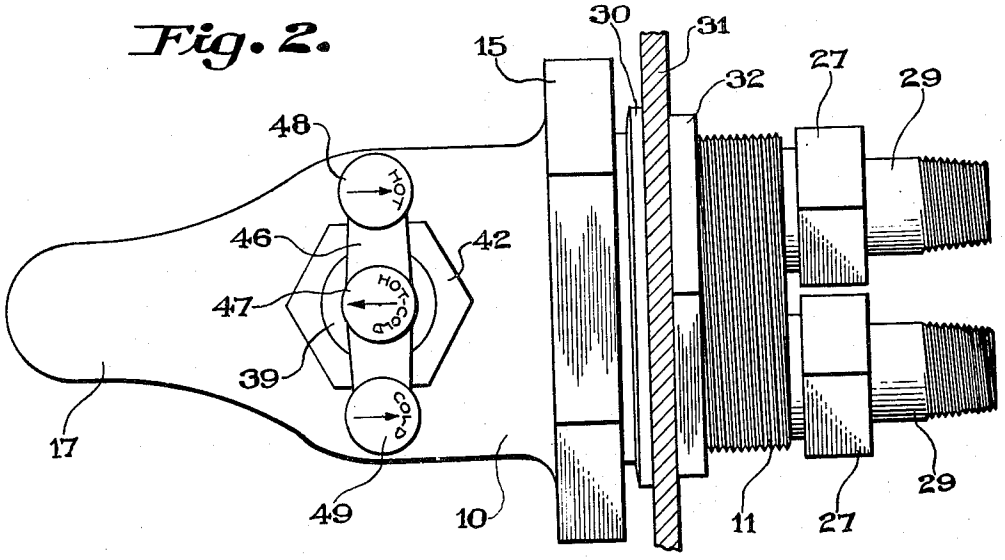

Otto L. Compton
INVENTOR

BY Victor J. Evans
ATTORNEY

H. A. LaBlair
P. C. Lawrence
WITNESS:

Dec. 2, 1924. 1,517,956

O. L. COMPTON

FAUCET

Filed July 31, 1922 3 Sheets-Sheet 2

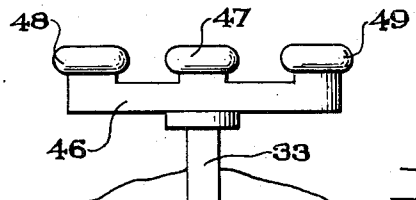

Fig. 3.

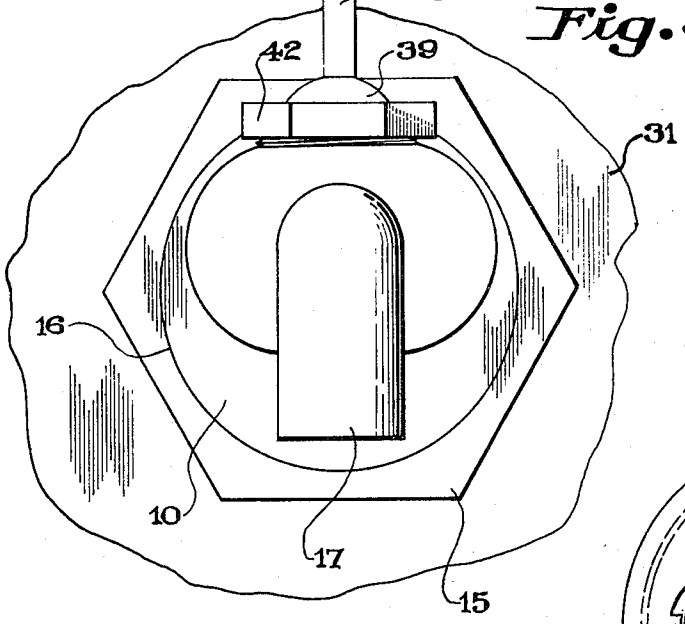

Fig. 6.

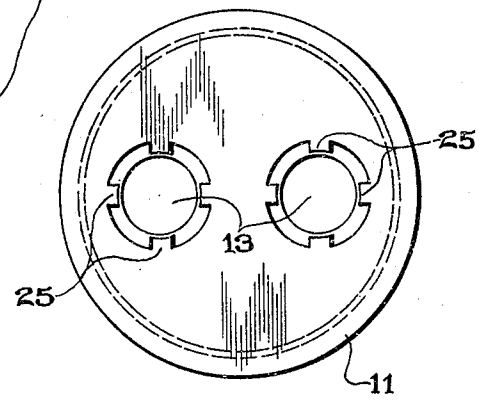

Fig. 7.

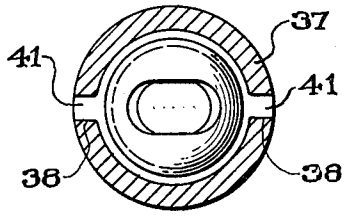

Fig. 8.

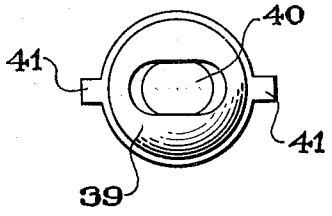

Otto L. Compton

INVENTOR

BY Victor J. Evans

ATTORNEY

H. A. La Blair
P. C. Lamond.
WITNESS:

Dec. 2, 1924. 1,517,956

O. L. COMPTON

FAUCET

Filed July 31, 1922 3 Sheets-Sheet 3

Fig. 4.

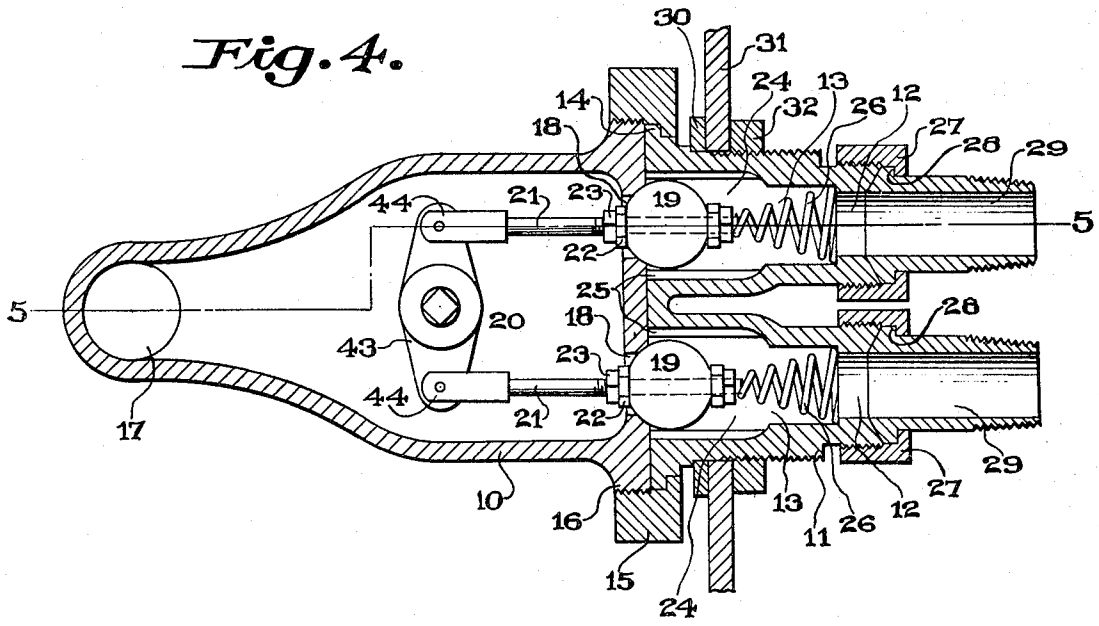

Fig. 5.

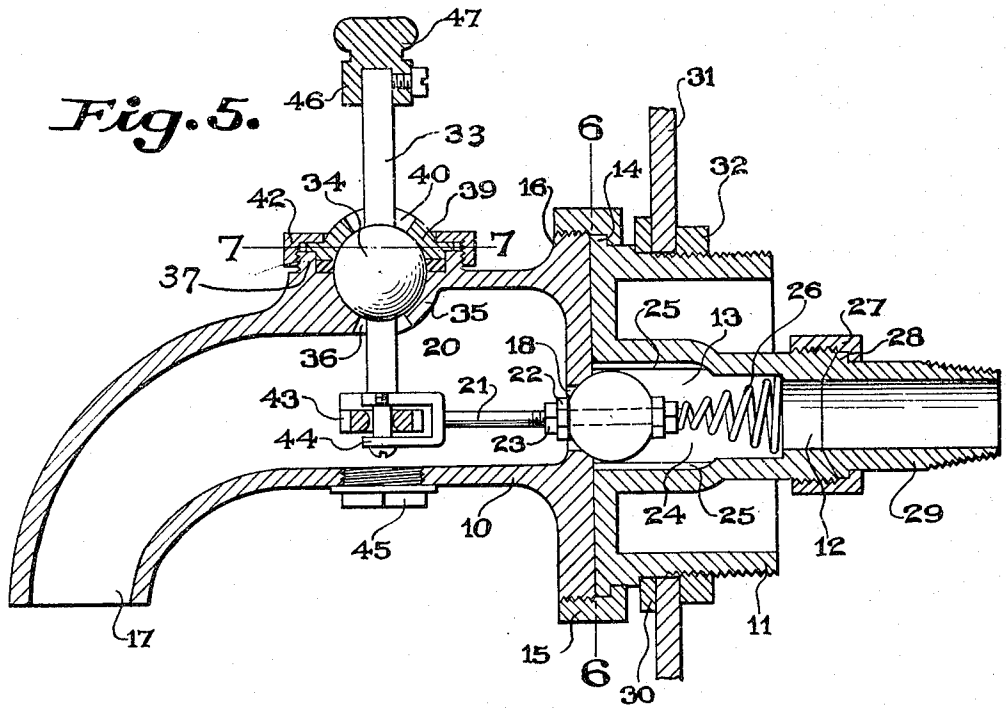

Otto L. Compton
INVENTOR

BY Victor J. Evans
ATTORNEY

H. A. LaBlair
P. L. Gannon
WITNESS:

Patented Dec. 2, 1924. 1,517,956

UNITED STATES PATENT OFFICE.

OTTO L. COMPTON, OF EATONVILLE, WASHINGTON.

FAUCET.

Application filed July 31, 1922. Serial No. 578,751.

To all whom it may concern:

Be it known that I, OTTO L. COMPTON, a citizen of the United States, residing at Eatonville, in the county of Pierce and State of Washington, have invented new and useful Improvements in Faucets, of which the following is a specification.

This invention relates to improvements in faucets and has particular relation to that type of faucet capable of dispensing either hot or cold water from a single outlet nozzle.

An object of the present invention is the provision of novel means for controlling the faucet, whereby the hot and cold water discharge ports may be either independently opened so as to discharge separately either hot or cold water, or simultaneously opened to regulate the temperature of the water discharged.

Another object is the provision of a faucet of the above character, which is constructed of separate sections, whereby access may be had to the interior, when necessary or desired.

With the above and other objects in view, the invention further includes the following novel features and details of construction, to be hereinafter more fully described, illustrated in the accompanying drawings and pointed out in the appended claim.

In the drawings:—

Figure 1 is a side elevation of a faucet constructed in accordance with the invention.

Figure 2 is a top plan view of the same.

Figure 3 is a front view.

Figure 4 is a horizontal sectional view.

Figure 5 is a section on the line 5—5 of Figure 4.

Figure 6 is a section on the line 6—6 of Figure 5.

Figure 7 is a similar view on the line 7—7 of Figure 5.

Figure 8 is a detail view of the cap employed in connection with the mounting of the operating handle.

Referring to the drawings in detail, wherein like characters of reference denote corresponding parts, the faucet body is shown as constructed of separate sections indicated at 10 and 11. The last mentioned section includes the inlet ports or passages 12 for hot and cold water. These ports or passages are shown as being horizontally arranged and spaced apart, being formed of tubular members 13 which are arranged within the section 11 of the faucet body. This section has its inner end surrounded by a flange 14, which is engaged by a flange provided upon an internally threaded collar or union 15, the threads of which engage an externally threaded flange 16 provided upon the adjacent end of the faucet body section 10. The collar 15 thus serves to hold the sections 10 and 11 together in a manner to permit them to be readily disconnected when desired and further aids in assembling the faucet.

The outer end of the section 10 is provided with a discharge nozzle 17 which forms a common discharge for the water entering through the ports 12. For this purpose, the inner end of the section 10 is provided with ports 18, whose edges form seats for valves 19 which control the admission of water to a mixing chamber 20 provided in the section 10.

The valves 19 are preferably of ball shape and have extending therefrom stems 21. The inner ends of these stems are threaded and are secured to the valves by adjusting nuts 22 and lock nuts 23, the purpose being to accurately regulate the length of these stems so as to provide for the proper operation of the faucet. This portion of the ports or passages 12 within which the valves 19 operate, is preferably enlarged as at 24 and this enlarged portion is provided with longitudinally extending ribs 25 which provide guides for the valves 11 and channels for the passage of water past these valves when the latter are open. It is preferred to hold the valves yieldingly upon their seats by means of springs 26, so as to insure their proper closing and prevent their accidental opening when the faucet is used with a low water pressure. The inner ends of the tubular members 13 which form the ports or passages 12 have their outer peripheries threaded for engagement with a flanged collar 27, the flange of which engages a flange 28 formed on the inner end of a nipple 29, by means of which the faucet may be secured to a water supply. The outer periphery of the section 11 is also threaded and has mounted thereon a collar 30 which abuts an annular shoulder provided on the section 11. This collar is adapted to bear against the face of the sink or other member to which the faucet is secured, a fragmentary portion of which is indicated at 31. A thread-

ed retaining nut or collar 32 is engageable with the threaded periphery of the section 11 and bears against the opposite face of the member 31 so that the faucet will be securely held in place.

One of the novel features of the invention resides in the manner of operating the valves 19, the construction being such as to permit these valves to be independently opened so that the faucet will discharge either hot or cold water, or simultaneously opened so that both hot and cold water will enter the mixing chamber 20 and be discharged through the nozzle 17 at a regulated temperature. For this purpose there is provided an operating handle 33, which is provided with a spherical enlargement 34. This spherical enlargement is mounted in a bearing, one-half of which is formed within the section 10 of the faucet body, as indicated at 35. This section is provided with an elongated slot 36 through which the stem 33 passes and the portion 35 is surrounded by a flange 37 which is interrupted to provide slots 38. A semi-spherical cap 39 co-operates with the portion 35 to enclose the spherical portion 34 of the stem 33. This cap 39 is also provided with an elongated slot 40 for the passage of the stem 33 and with oppositely extending lugs 41 which are received within the slots 38 so as to prevent rotary movement. The cap is secured in place through the medium of an internally threaded flanged ring 42.

The lower end of the stem 33 is connected to a bar 43 which extends transversely of the faucet and the opposite ends of this bar are pivotally connected to the valve stems 21 as shown at 44. A plug closed opening 45 is provided, whereby access may be had to the interior of the section 10 of the faucet.

The stem 33 has mounted upon its upper end a transverse bar 46 which carries a plurality of knobs, the center knob indicating hot and cold, while one end knob indicates hot and the other end knob, cold, as indicated respectively at 47, 48 and 49.

When it is desired to dispense hot water, the operating handle or stem 33 is horizontally rotated in the direction of the arrow contained upon the knob 48. This will move the hot water valve 19 inward, the transverse bar 43 moving upon the pivotal connection of the stem 21 of the other valve. When it is desired to open the cold water valve, the handle is moved in an opposite direction as indicated by the arrow on the knob 49. In order to simultaneously open both valves so as to regulate the temperature of the water, the handle is moved directly forward as indicated by the arrow on the button 47. Both valves 19 will thus be opened. The temperature of the water may be accurately regulated by moving the bar 46 either to the right or left after both valves have been opened. This will regulate the degree of opening of the valves so that the amount of hot water or cold water passing through the faucet may be controlled.

The invention is susceptible of various changes in its form, proportions and minor details of construction and the right is herein reserved to make such changes as properly fall within the scope of the appended claim.

Having described the invention what is claimed is:—

The combination with a faucet having a pair of inlets and a reciprocating spring-pressed valve controlling each of the inlets, of a rotatable and oscillatory operating element mounted in the faucet and having its lower end disposed within the same, and a link fixed to the lower end of the operating element and having its ends pivotally connected with the valves, the valves being moved to open position independently upon rotation of the operating element, and simultaneously moved to open position upon oscillating the operating element in one direction.

In testimony whereof I affix my signature.

OTTO L. COMPTON.