US 20130230419A1

(19) **United States**

(12) **Patent Application Publication**

(10) **Pub. No.: US 2013/0230419 A1**

(43) **Pub. Date: Sep. 5, 2013**

**Lucas**

(54) **FORCE-EQUALIZATION STATIONARY-COIL ACTUATOR FOR FLUID MOVERS**

(75) Inventor: **Timothy S. Lucas**, Ashland, VA (US)

(73) Assignee: **Influent Corporation**

(21) Appl. No.: **13/877,570**

(22) PCT Filed: **Oct. 7, 2011**

(86) PCT No.: **PCT/US11/55196**

§ 371 (c)(1),
(2), (4) Date: **May 14, 2013**

**Related U.S. Application Data**

(60) Provisional application No. 61/391,524, filed on Oct. 8, 2010.

**Publication Classification**

(51) **Int. Cl.**
***F04B 35/04*** (2006.01)

(52) **U.S. Cl.**
CPC ..... ***F04B 35/04*** (2013.01)
USPC ..... **417/413.1**

(57) **ABSTRACT**

A fluid mover includes a first dynamic armature attached to a flexible member and a second dynamic armature attached to a second flexible member. The fluid mover also includes a housing and first and second flexible members being attached to the housing so as to form a fluid chamber volume bounded by the housing and first and second flexible members. A stationary current carrying coil positioned between first and second armatures. The current carried by the coil generates a magnetic force acting on the armatures and wherein coil and armatures are positioned and configured so as to ensure that the instantaneous magnetic force experienced by the two armatures will always be identical regardless of the relative positions of the armatures and regardless of the time varying properties of the current.

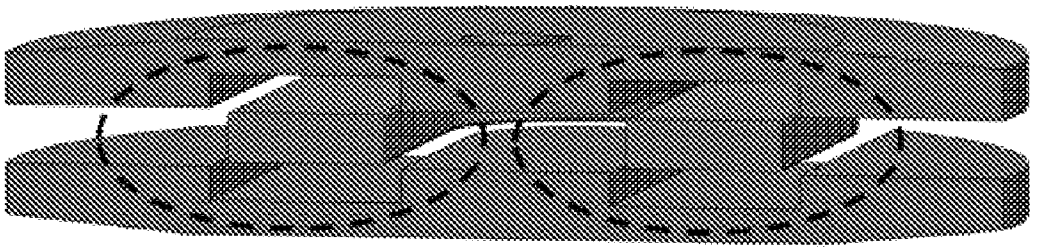

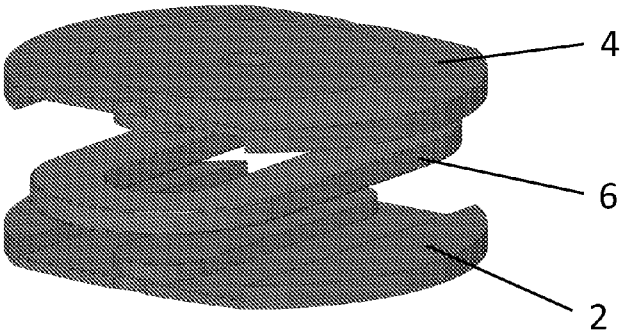


FIGURE 1

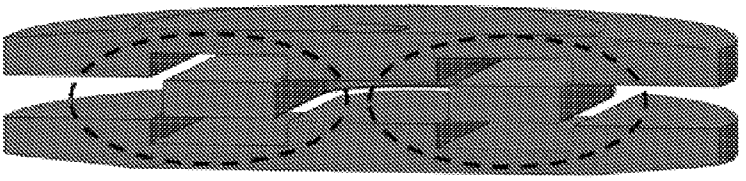

FIGURE 2

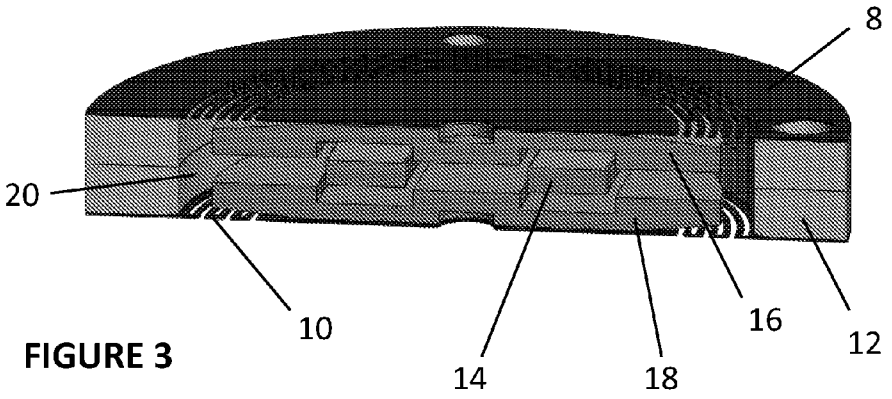


FIGURE 3

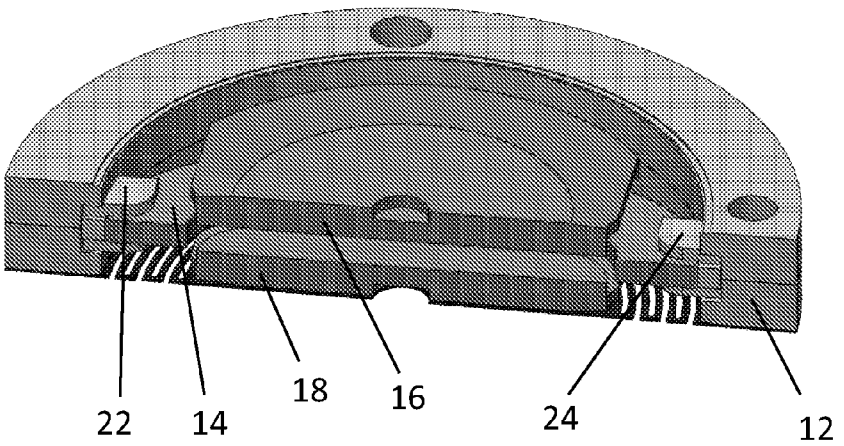


FIGURE 4

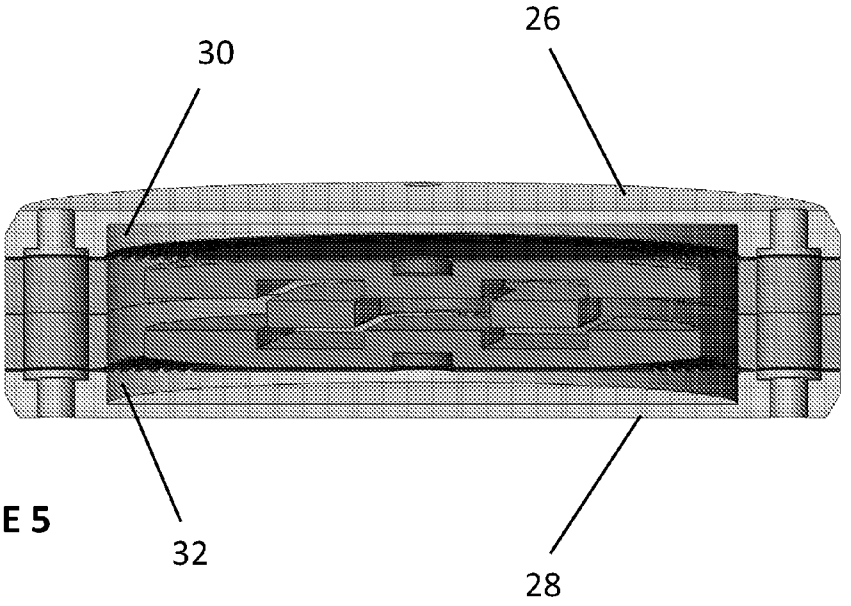


FIGURE 5

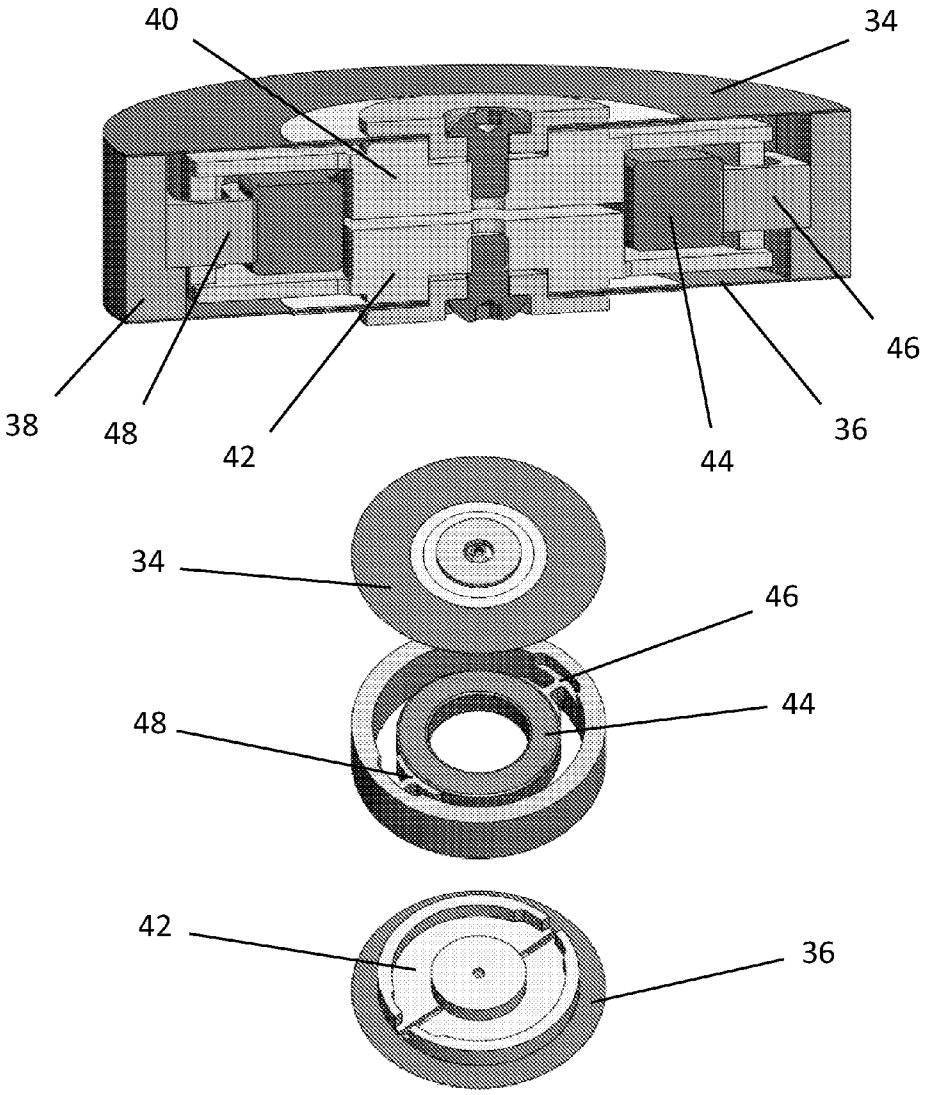


FIGURE 6

# FORCE-EQUALIZATION STATIONARY-COIL ACTUATOR FOR FLUID MOVERS

## BACKGROUND

**[0001]** This application relates to high-power long-life actuators for positive displacement fluid movers such as liquid pumps, gas compressors and synthetic jets.

**[0002]** Positive displacement fluid movers can provide high flow and pressure however in order to be suitable for many applications such as medical devices; thermal management of computers, servers, LED lighting; and other electronics cooling applications these fluid movers must operate with low vibration and provide long life. Further, these applications require the fluid movers to be constructed in smaller and smaller sizes in order to fit in space constrained product platforms without loss of fluid performance.

**[0003]** If fluid movers could use two pistons that move in opposition to each other then vibration would be minimized but to make this two piston approach practical requires that the same force waveform be applied to each piston. Separate actuation of each piston adds size, mechanical complexity and cost and the challenge of matching the force on each piston would require a control scheme which adds further complexity and cost.

**[0004]** As such an unmet need exists for improvements in fluid mover actuation that enables integration of fluid mover components to achieve smaller sizes without loss of performance or life while providing a simple means to assure that an identical force waveform is applied to each piston.

## SUMMARY

**[0005]** To satisfy these needs and overcome the limitations of previous efforts, the present application discloses a dual armature/diaphragm actuator with a stationary coil mounted between the armatures, where the resulting magnetic force is applied directly between the two pistons thereby assuring that both pistons experience the same instantaneous actuation force in order to minimize vibration. To further satisfy these needs and overcome the limitations of previous efforts, the means of actuation integrates the piston and actuator components to reduce the size of fluid movers for a given pumping power output, while eliminating any dynamic electrical components, such as vibrating wires that could lead to failure and reduced life.

## BRIEF DESCRIPTION OF THE DRAWINGS

**[0006]** The accompanying drawings, which are incorporated in and form a part of the specification, illustrate the embodiments of the present invention and, together with the description, serve to explain the principles of the invention. In the drawings:

**[0007]** FIG. **1** illustrates an embodiment of a fluid mover actuator that provides for the same actuator force being applied to both armatures.

**[0008]** FIG. **2** is a sectional view of the actuator of FIG. **1** showing the flux path that occurs when the coil is energized.

**[0009]** FIG. **3** is a sectional view that illustrates how the actuation system of FIG. **1** is applied to a fluid mover.

**[0010]** FIG. **4** is sectional view of the fluid mover of FIG. **3** that shows the mounting of the stationary coil.

**[0011]** FIG. **5** is a sectional view illustrating how both sides of each diaphragm can be used to form additional fluid chambers for applying energy to fluids.

**[0012]** FIG. **6** provides sectional and exploded views of an armature design that increases actuator efficiency by improving coil utilization.

## DETAILED DESCRIPTION

**[0013]** FIG. **1** illustrates certain key functional concepts of a fluid actuator according to an exemplary embodiment of the present invention where a stationary coil **6** is positioned between an identical pair of armatures **2** and **4**. When the coil is energized a magnetic field is generated within armatures **2** and **4** and the resulting flux loop path of the field is illustrated by the dotted lines in FIG. **2**. The magnetic field creates an attractive force in the air gap between the armatures that pulls the two armatures towards each other. Applying the force directly between the two armatures assures that the instantaneous forces, and therefore the force waveform, experienced by armatures **2** and **4** are always identical.

**[0014]** FIG. **3** illustrates how the actuator of FIG. **1** is used in a fluid moving device. Armatures **16** and **18** are bonded to respective diaphragms **8** and **10**. Diaphragms **8** and **10** each have an annular cantilever spring matrix making the diaphragms capable of larger axial displacements. In practice, diaphragms **8** and **10** would have an elastomeric over molding (not shown) to provide a pressure seal. Diaphragms **8** and **10** represent one of many kinds of diaphragms that could be used within the scope of the present invention while still exploiting the actuation principles thereof. The diaphragms may be configured, for example, as shown in International Patent Application No. PCT/US2011/022386, which is incorporated by reference herein in its entirety. Diaphragms **8** and **10** form a pressure tight seal with housing **12**. Compression chamber **20** is bounded by diaphragms **8** and **10** and housing **12**. When the coil is energized the magnetic forces cause armatures **16** and **18** to move towards each other along with their respective diaphragms **8** and **10** resulting in a volume reduction of fluid chamber **20**. When the coil is turned off, the potential energy stored in the diaphragm springs will push the armatures and diaphragms back in the opposite direction resulting in a volume increase of fluid chamber **20**. The resulting cyclic volume decrease and increase associated with switching the coil off and on will impart energy to the fluid in fluid chamber **20** providing the fluid energy needed for the particular application such as, for example, pumping liquids and gases or powering synthetic jets or other fluid moving applications such as mixing, metering or sampling to name a few.

**[0015]** The oscillation of armatures **16** and **18** result in reaction forces being transmitted to housing **12** via respective diaphragms **8** and **10**. To the degree that the masses of armatures **16** and **18** are equal and the spring stiffness of diaphragms **8** and **10** are equal, the reactions forces will cancel resulting in minimal housing vibration if the displacements of armatures **16** and **18** are equal. By delivering the same force amplitude and force waveform to each armature, a fluid moving actuator as disclosed herein may operate so that each armature will execute the same displacement amplitude and displacement waveform, thereby fulfilling the conditions required for zero or minimal housing vibration.

**[0016]** The fluid mover of FIG. **3** can be operated at its mechanical mass-spring resonance frequency where the resonance frequency is determined by the combined spring stiffness of the diaphragm and fluid and the mass of the fluid and armature.

**[0017]** The fluid mover of FIG. **3** is shown in FIG. **4** with a different sectional view in order to show how the coil may be

rigidly mounted to housing **12**. In order to show the mounting arrangement, only one of the diaphragms is now shown in FIG. **4**. Coil **14** is held by coil clamps **22** and **24** which in turn are clamped into housing **12**. This stationary coil design eliminates the need for the moving power leads of a dynamic coil and also eliminates the potential failure of those leads or wires thereby promoting life and reliability.

**[0018]** With any of the above mentioned fluid moving applications, both sides of the diaphragms can be used for fluid work. For example, FIG. **5** shows the addition of end plates **26** and **28** which create respective fluid chambers **30** and **32**. Fluid chambers **30** and **32** can be used to convey energy to fluid for any of the above mentioned applications.

**[0019]** The scope of the present invention includes numerous additional variations to the fluid mover actuator described herein. For example the design of the armatures and the resulting flux path may be altered in many ways while still providing a force directly between the armatures by means of a stationary coil located between the armatures. FIG. **6** shows an armature design for improving electro-mechanical transduction efficiency. As shown in FIG. **6**, opposing armatures **40** and **42** are attached to respective diaphragms **34** and **36** with the diaphragms in turn being attached to housing **38**. A stationary coil **44** is rigidly mounted to housing **38** by coil arms **46** and **48**. In the design of FIG. **6**, the coil is more completely surrounded with the armature material compared to the design shown in FIGS. **3** and **4**, where a portion of the coil is outside the armature material. Sections of the coil that are outside the armature material generate less of a magnetic field in the armatures which reduces the actuator's efficiency. Further variations may include alternate components used to create the force such as permanent magnets and moving-magnet stationary-coil voice coil type actuators, where the armatures would be replaced with a voice-coil type magnet and backing magnet iron to provide a coil air gap having a permanent magnetic field. Specific subcomponent designs for an actuator according to the present invention will be determined by good design practice in response to specific design and end-product requirements.

**[0020]** The various embodiments of a fluid actuator according to the present invention can be driven at any frequency within the scope of the present invention. While performance advantages can be provided by operating the actuator at drive frequencies that are equal to or close to its mass-spring resonance, the scope of the present invention is not limited to the proximity of the drive frequency to the mass-spring resonance frequency. When drive frequencies are close enough to the mass-spring resonance that energy is stored in the resonance, then armature-diaphragm amplitudes will increase in proportion to the stored energy. The closer the drive frequency is to the instantaneous resonance frequency, the greater the stored energy and the greater the armature/diaphragm displacement and the greater the power transferred to the fluid in the fluid chamber for a given input power level. Operation of an actuator according to the present invention, either with or without stored energy, is considered within the scope of the present invention.

**[0021]** It is also understood that according to the various embodiments of a fluid mover actuator according to the present invention, the armatures would typically be made of ferrous type metals having high magnetic permeability but that the degree of permeability and loss characteristics required will be based on the requirements of a given application.

**[0022]** Many different drive circuits may be used to power a fluid mover actuator according to the present invention and will be apparent to one skilled in the art and these drive circuits may include resonance locking controls, such as a phase locked loop control or other CPU-based controls, to keep the drive frequency locked to the mechanical resonance frequency which can change due to changing system conditions. Many different voltage waveforms can also be used to drive the fluid mover actuator according to the present invention and waveform characteristics and duty cycles will be chosen according to the requirements of the end product or application.

**[0023]** Applications for a fluid mover actuator according to the present invention include moving air or liquids for heat exchange in thermal management applications via air pumps, liquid pumps or synthetic jets for a wide range of hot objects including electronics components such as microprocessors, power electronics components such as MODFETS, HBLEDs and any electronics components needing cooling as well as secondary heat exchange targets such as heatsinks, printed circuit cards and electronics enclosures. Products needing such cooling include servers, PC towers, laptops, HBLED lamps, consumer electronics, PDAs or sealed electronics enclosures such as in cell phones, telecommunications and military applications.

**[0024]** Other applications include general mixing of gases and particulate matter for chemical reactions, fluid metering; miniature air and fuel pumps for micro fuel cells; miniature pumps for liquid sampling, air sampling for bio-chem warfare agents and general chemical analysis or creating other material changes in suspended particulates such as comminution or agglomeration, or a combination of any of these processes, to name a few.

**[0025]** The foregoing description of some of the embodiments of the present invention have been presented for purposes of illustration and description. In the drawings provided, the subcomponents of individual embodiments provided herein are not necessarily drawn in proportion to each other, for the sake of functional clarity. In an actual product, the relative proportions of the individual components are determined by specific engineering design requirements. The embodiments provided herein are not intended to be exhaustive or to limit the invention to a precise form disclosed, and obviously many modifications and variations are possible in light of the above teachings. The embodiments were chosen and described in order to best explain the principles of the invention and its practical application to thereby enable others skilled in the art to best utilize the invention in various embodiments and with various modifications as are suited to the particular use contemplated. Although the above description contains multiple specifications, these should not be construed as limitations on the scope of the invention, but rather as an exemplification of alternative embodiments thereof.

What is claimed is:

**1**. A fluid mover comprising:

a first dynamic armature attached to a flexible member;

a second dynamic armature attached to a second flexible member;

a fluid mover housing;

first and second flexible members being attached to the housing so as to form a fluid chamber volume bounded by the housing and first and second flexible members;

a stationary current carrying coil positioned between first and second armatures;

wherein the current carried by the coil generates a magnetic force acting on the armatures and

wherein coil and armatures are positioned and configured so as to ensure that the instantaneous magnetic force experienced by the two armatures will always be identical regardless of the relative positions of the armatures and regardless of the time varying properties of the current.

**2**. The fluid mover actuator of claim **1** wherein:

a cyclic current waveform having a frequency f is delivered to the coil so as to cause the first and second flexible members to oscillate in opposition to each other at frequency f, thereby imparting energy to the fluid within the fluid chamber.

**3**. The fluid mover actuator of claim **2**, wherein said fluid chamber comprises the fluid chamber of a liquid pump.

**4**. The fluid mover actuator of claim **2**, wherein said fluid chamber comprises the fluid chamber of a gas pump.

**5**. The fluid mover actuator of claim **2** wherein said fluid chamber comprises the fluid chamber of a synthetic jet.

**6**. The fluid mover actuator of claim **2**, wherein the frequency f is near or equal to the fluid mover's mechanical resonance frequency.

* * * * *