Mar. 20, 1923. 1,448,881.

J. P. THEIS.

COMBINATION NUMBER REFLECTOR AND HALL LIGHT.

FILED APR. 18, 1922. 2 SHEETS SHEET 1.

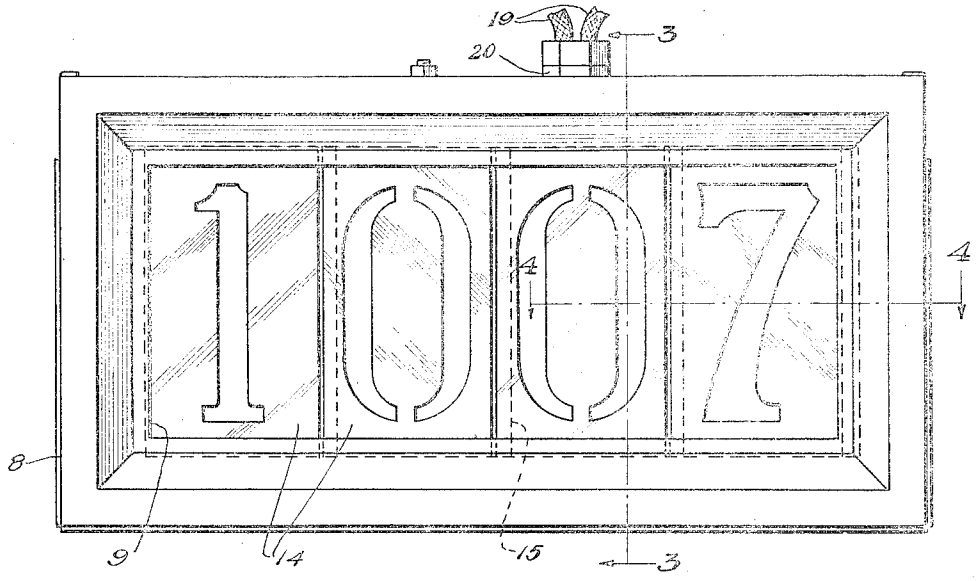

Fig. 1

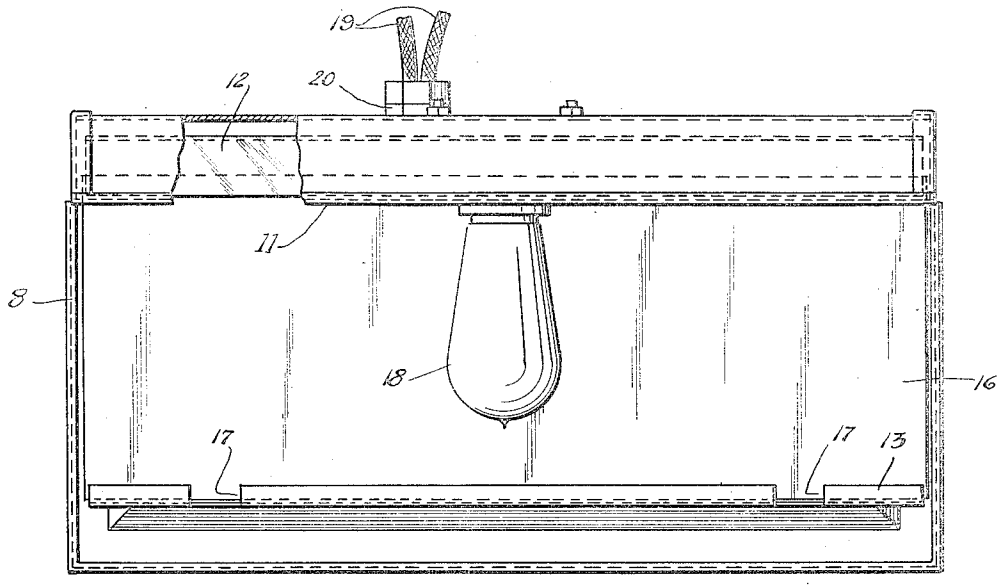

Fig. 2

Witnesses:
Wm. Schmellhardt.
J. D. Stuwe

Inventor
John P. Theis
By Joshua R. H. Potts.
His Attorney

Mar. 20, 1923. 1,448,881.

J. P. THEIS.

COMBINATION NUMBER REFLECTOR AND HALL LIGHT.

FILED APR. 18, 1922. 2 SHEETS—SHEET 2.

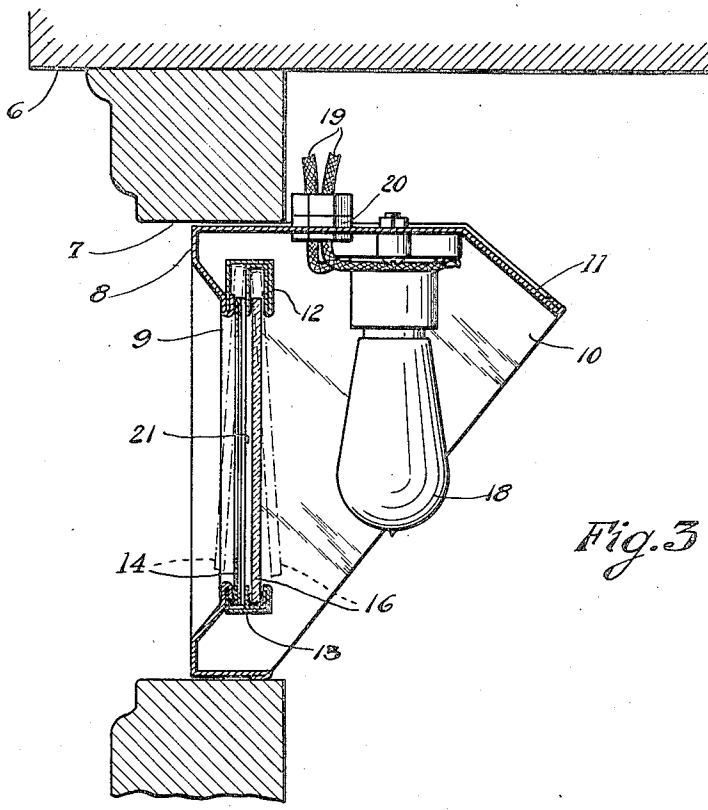

Fig. 3

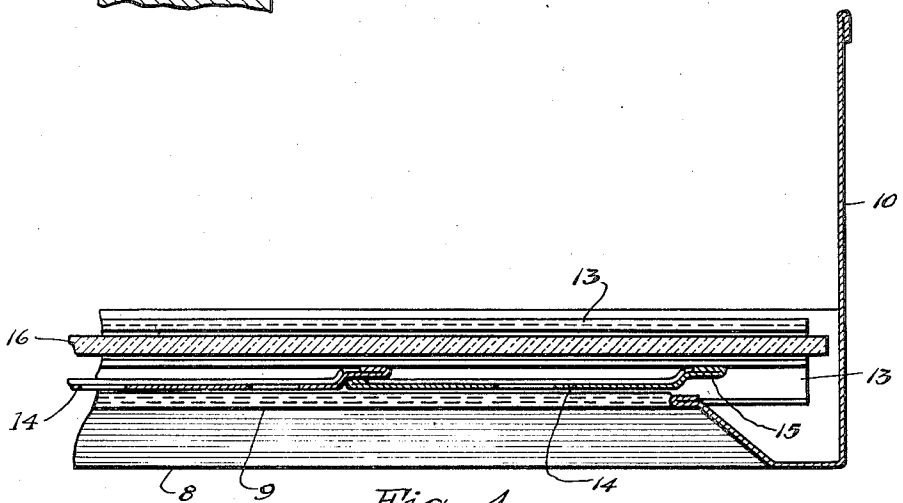

Fig. 4

Witnesses:
Wm. Schmidhardt
J. D. Stuve

Inventor
John P. Theis
By Joshua R. H. Potts.
His Attorney

Patented Mar. 20, 1923. 1,448,881

UNITED STATES PATENT OFFICE.

JOHN P. THEIS, OF CHICAGO, ILLINOIS, ASSIGNOR OF FORTY-NINE ONE-HUNDREDTHS TO NICHOLAS J. USELDING, OF CHICAGO, ILLINOIS.

COMBINATION NUMBER REFLECTOR AND HALL LIGHT.

Application filed April 18, 1922. Serial No. 554,888.

To all whom it may concern:

Be it known that I, JOHN P. THEIS, a citizen of the United States, and a resident of the city of Chicago, county of Cook, and State of Illinois, have invented a certain new and useful Combination Number Reflector and Hall Light, of which the following is a specification.

My invention relates to a new and useful combination number reflector and hall light, and has for its object the provision of a device which may be used in place of the usual hall light and the usual door numbers.

Other objects will appear hereinafter.

The invention consists in the combinations and arrangements of parts hereinafter described and claimed.

The invention will be best understood by reference to the accompanying drawings forming a part of this specification, and in which,

Fig. 1, is a front elevation of my device,

Fig. 2, is a rear elevation thereof,

Fig. 3, is a vertical cross section taken on line 3—3 of Fig. 1, and

Fig. 4, is a horizontal section taken on line 4—4 of Fig. 1.

My invention is adapted to be mounted near or over the front door of a building 6, in any convenient manner, as in the frame opening 7, or within the transom. The device comprises a housing 8, preferably made out of sheet metal, having a front opening 9 and a rear opening 10, said housing having a portion 11 bent downward over the rear opening 10 for directing the rays of light downwardly into the hall. The material of the housing at the front opening 9 is bent inward and is provided with an upper frame 12 and a lower frame 13, each in the form of a double set of grooves or tracks, the upper grooves or tracks being deeper than the lower ones. The housing is preferably enameled white in the inside to aid in reflecting the light, and is suitably painted on the outside. The door numbers 14, having offset flanges 15 for engaging the adjoining numbers (see Fig. 4) are mounted in the forward grooves by first inserting them in the deeper upper ones, as shown in dotted lines in Fig. 3, and then lowering them into position in the lower grooves, said numbers being colored black, or a similar dark color, to show up clearly against the white translucent glass plate 16, which is mounted in the rear grooves by inserting it from the rear, as indicated in dotted lines in Fig. 3, and then lowering it into the lower grooves, notches 17 being provided in the rear flange of the frame member 13 for convenient manipulation of the glass plate. An electric light 18 is mounted in the housing and is provided with suitable electric conductors 19 passing through a sleeve 20 fastened in the upper wall of the housing.

The translucent glass plate 16 serves to reflect part of the light from the electric light 18 into the hall, and to permit part of said light to pass through and illuminate the door numbers 14, and a space or recess 21 between said plate and numbers also aiding to set off the dark numbers against the light plate; and any light coming from the outside or front of the housing will be mainly reflected by said plate to set out the dark door numbers. The plate may also be readily removed and cleaned whenever desired.

While I have illustrated and described the preferred form of construction for carrying my invention into effect, this is capable of variation and modification without departing from the spirit of the invention. I, therefore, do not wish to be limited to the precise details of construction set forth, but desire to avail myself of such variations and modifications as come within the scope of the appended claims.

Having described my invention, what I claim as new and desire to secure by Letters Patent is:

1. A device of the class described, comprising a housing having a forward and a rearward opening mounting means in the forward opening; character plates mounted in said mounting means; a translucent reflector mounted behind the character plates; and a source of illumination between said reflector and the rearward opening of the housing.

2. A device of the class described, comprising a housing having a forward and a rearward opening; members displaying characters and a translucent reflector plate for said housing; frame means on said housing for mounting said character members and said plate therein, said frame means including deepened upper grooves for mounting said members and plate by first an upward thrust to clear the lower part of said frame means and then a downward thrust.

through either said forward or said rearward opening; and illuminating means between said plate and rearward opening.

3. A device of the class described, comprising a housing having its front wall bent inwardly and provided with an opening; frame members provided with double grooves arranged around said opening; characters removably mounted in the outer grooves; a translucent plate removably mounted in the inward grooves, there being a space provided between said characters and said plate; and a light mounted in said housing to illuminate said plate and space to set off the characters.

4. A device of the class described, comprising a housing provided with a front and a rear opening; number members and a translucent plate mounted in said front opening; frame members provided with double grooves mounted on said front opening, the upper grooves being deepened and said frame members being arranged to mount said number members and plate by inserting them through either the front or rear opening and by thrusting them upwardly in said deepened grooves, over the lower frame, and then seating them in the lower grooves; and a light mounted in said housing to illuminate said plate and number members and also the space beyond the rear opening.

5. A device of the class described, comprising a housing having a forward and a rearward opening; mounting means provided in the forward opening; character means mounted in said mounting means; a translucent reflector plate in said mounting means behind the character means, said mounting means being spaced sufficiently apart to mount said character means and reflector plate therein either through the forward opening or the rearward opening; and illuminating means mounted in said housing rearward of said plate.

In testimony whereof I have signed my name to this specification in the presence of two subscribing witnesses.

JOHN P. THEIS.

Witnesses:
FREDA C. APPLETON,
MARGARET AUER.