A. TOWERS.

VENDING MACHINE.

APPLICATION FILED OCT. 17, 1907.

906,666. Patented Dec. 15, 1908.

2 SHEETS—SHEET 1.

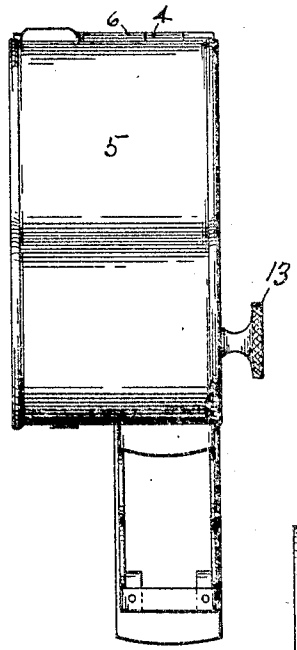

Fig. 1.

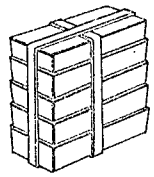

Fig. 3.

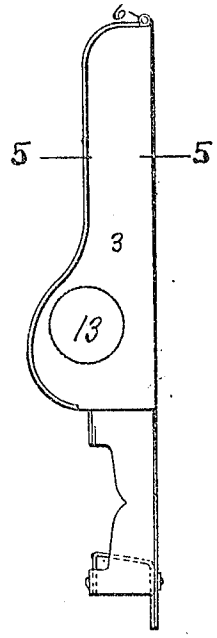

Fig. 2.

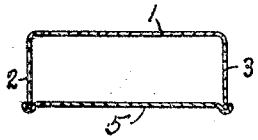

Fig. 5.

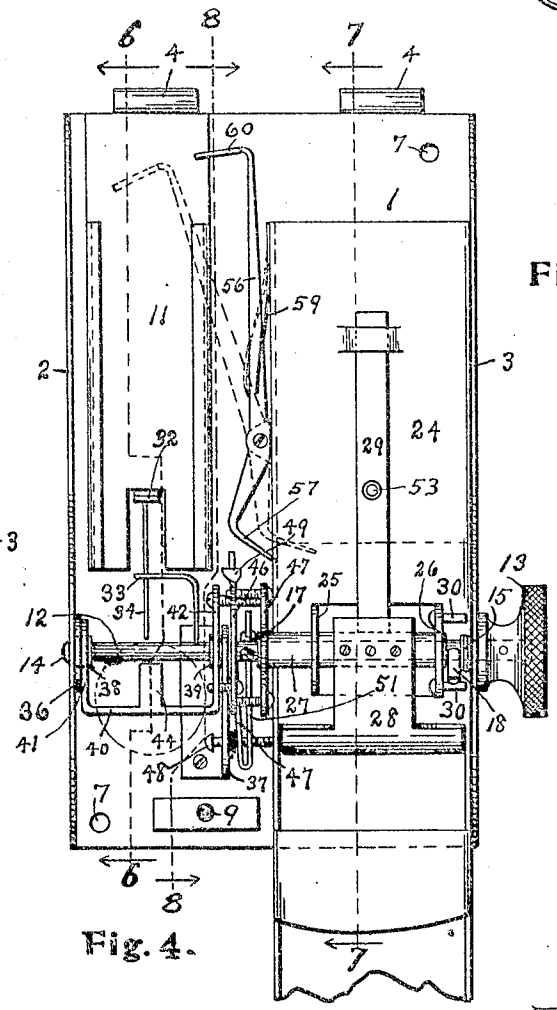

Fig. 4.

Witnesses

D. B. Baenziger.

E. M. Brown.

Inventor

Alderton Towers.

By Edward. N. Pagelsen. Attorney

A. TOWERS.

VENDING MACHINE.

APPLICATION FILED OCT. 17, 1907.

906,666. Patented Dec. 15, 1908.

2 SHEETS—SHEET 2.

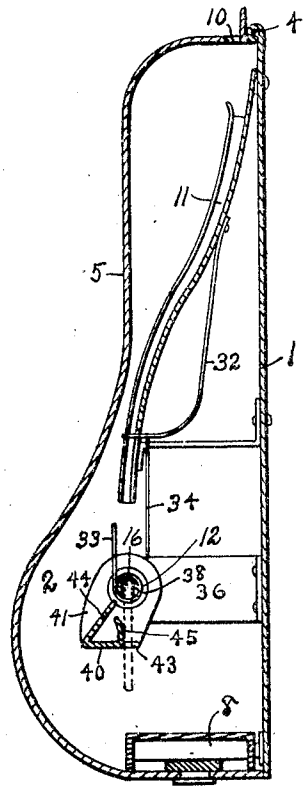

Fig. 6.

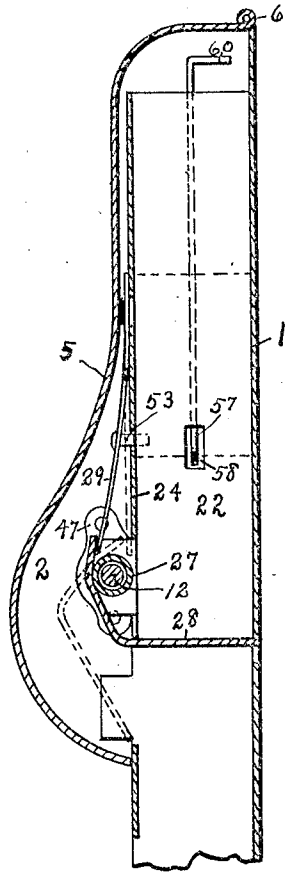

Fig. 7.

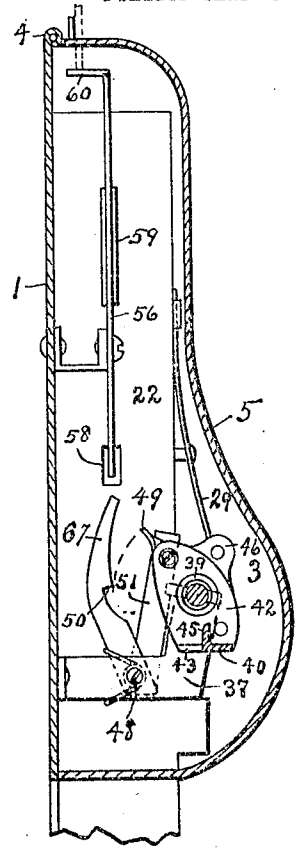

Fig. 8.

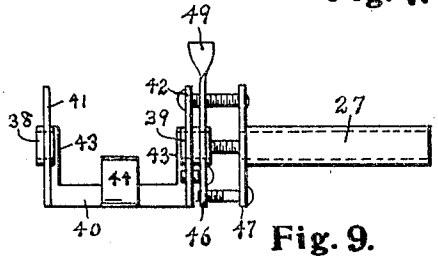

Fig. 9.

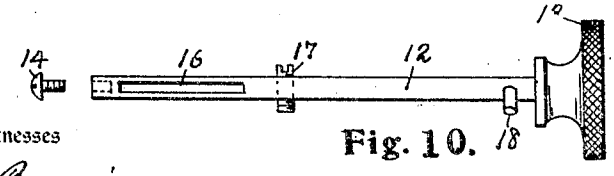

Fig. 10.

Witnesses

O. B. Buenziger.

L. M. Brown.

Inventor

Alderson Towers.

By Edward N. Pagelsen.

Attorney

UNITED STATES PATENT OFFICE.

ALDERTON TOWERS, OF TORONTO, ONTARIO, CANADA.

VENDING-MACHINE.

No. 906,666. Specification of Letters Patent. Patented Dec. 15, 1908.

Application filed October 17, 1907. Serial No. 397,765.

To all whom it may concern:

Be it known that I, ALDERTON TOWERS, a subject of the King of Great Britain and Ireland, and a resident of Toronto, in the county of York, Province of Ontario, and Dominion of Canada, have invented a new and useful Vending-Machine, of which the following is a specification.

My invention relates to machines adapted to be secured to the backs of seats, chairs and benches of public conveyances and places of public amusement, for the purpose of vending confectionery and other small articles; and the object of my improvements is to provide means of this kind which shall occupy little space, which shall have a comparatively large receptacle for the articles to be vended, and which can be cheaply constructed.

My invention consists in a novel article receptacle, and discharging means for the articles to be vended. It consists further in novel operating mechanism for the article discharging mechanism.

In the accompanying drawings, Figure 1 is a front view and Fig. 2 a side view of the vending machine. Fig. 3 is a view of a bundle of confectionery adapted for this machine. Fig. 4 is a front view of this machine with the cover removed. Fig. 5 is a cross section of the case on the line 5—5 of Fig. 2. Figs. 6, 7 and 8 are vertical cross sections on the lines 6—6, 7—7, and 8—8 of Fig. 4, respectively. Figs. 9 and 10 are details of the operating mechanism.

Similar reference characters refer to like parts throughout the several views.

The particular machine illustrated in the drawings is primarily intended to deliver a package or bundle of small cakes of chocolate or other confectionery upon the insertion of a nickel five cent piece. It is designed to hold three of these packages or bundles in its receptacle, and is also so designed that coins or blanks of less size or weight than a nickel will pass through without operating the mechanism. The slot through which the coins are introduced into the machine is of such dimensions that no disk larger than a nickel will enter. The two piece case of this mechanism is composed of a plate bent to form the back 1, left side 2 and right side 3. The upper edge of the back has ears 4 of a hinge formed on it. A front 5 having corresponding ears 6 of a hinge is pivoted at the upper edge of the back, and its edges are grooved to fit the edges of the sides as shown in Fig. 5. This prevents the front being pried off and tampering with the mechanism and contents. Holes 7 through the back admit screws by means of which the machine can be attached to the back of a seat, chair or to any other desirable object. A lock 8 is mounted at the lower edge of the front and engages the pin 9 secured to the back 1.

At the upper end of the front plate 5 is a slot 10 to admit the coin, its size being such that no coin larger than desired can be introduced.

Secured to the back is the coin chute 11 for directing or conveying the coin to the operating mechanism. The operating mechanism comprises a shaft 12 having an operating knob 13 at its outer end, and a series of connected sleeves. The shaft 12 is journaled in the side 3 and a screw 14 which enters its outer end is journaled in the side 2. A spring 15 on this shaft near the side 3 is adapted to return it to normal position. The shaft has a slot 16 to receive the coin, a screw 17 mounted near its middle point and a stop pin 18 near the operating knob.

The receptacle for the articles to be vended is a tubular case, preferably rectangular in cross section, and having the back 1 of the case for its back, sides 22, and front 24. The front is slitted, and the resulting tongues 25 and 26 are bent outward to form supports for the discharging mechanism which consists of a sleeve 27 journaled in these supports, and a bent plate 28 secured to said sleeve and normally forming a bottom for the receptacle. The upper end of the plate engages the spring 29, which spring is secured to the front of the receptacle whereby the lower end of the receptacle is held closed. See Figs. 4 and 7. Pins 30 carried by the supports 26 limit the movement of the pin 18 and of the shaft 12.

Under normal conditions, there is no connection between the shaft 12 and the sleeve 27 which carries the discharge plate 28. This connection is supplied by the coin and the operating mechanism, elevations of which are shown in Figs. 4, 6, 7 and 8, and a plan in Fig. 9. As will be seen in Figs. 4 and 6, the coin will slide down the chute 11 and strike the thin leaf spring 32, which spring is secured to the back of the chute. If of the requisite weight, the coin will push down the end of the spring and pass down

into the slot 16 in the shaft. The shaft now being turned to the right (Fig. 6), if a coin is in the slot 16, the operating mechanism will be actuated to drop the plate 28. If the coin is not of the requisite weight, it will rest on the end of the spring 32, in the chute. The shaft now being turned to the rear, the wire arm 33 secured thereto will engage the finger 34 on the spring 32, pushing it back. This will release the coin, permitting it to drop onto the shaft 12, but the slot being turned out of its path, the coin will slide off toward the front and drop into the bottom of the case.

Secured to the back 1 are the frames 36 and 37 which form bearings for the short sleeves or thimbles 38 and 39 of the operating mechanism. A cross bar 40 has end plates 41 and 42 which connect to the sleeves 38 and 39 respectively. The bar also has shoulders 43 and upwardly projecting tongues 44 and 45. The tongue 44 extends toward the shaft 12, so that when the sleeves and bar 40 are turned under the action of the shaft, it forms a guide for any coin that may be dropped into the chute after the operating mechanism has been turned, thus preventing the coin from lodging at the wrong place.

The distance between the shoulders 43 is such that the proper coin will lodge there (see dotted line, Fig. 4), while a coin of less diameter will pass through. A disk of lead while heavy enough to pass the spring 32, if not of proper diameter will pass between these shoulders.

When a proper coin passes down through the slot 16 of the shaft and lodges between the shoulders 43, it will still project into the slot. When the shaft is turned, the coin will engage the tongue 45, (Fig. 6) and swing the cross bar 40, the plates 41 and 42 and the sleeves 38 and 39. A second plate 46 on the opposite side of the bearing plate 37, and a third plate 47 on the sleeve 27 are connected to the plate 42 by means of screws as shown in Figs. 4, 8 and 9. As the door plate 28 is connected to the sleeve 27, it will open at each turning of the knob 13 whenever proper connection is made by means of a coin or other disk. The sleeves and plates are returned by means of the spring 29.

To release the coin, it is desirable that the shaft 12 first return to normal position. To permit this, the sleeves are held from returning by means of a spring held pawl 67 mounted on the screw 48. A finger 49 on the plate 46 is adapted to engage in a notch 50 of this pawl. Secured to or formed integral with this pawl is an arm 51 in the path of the screw 17 on the shaft 12.

When the knob is turned to the rear after the insertion of a proper coin, the sleeves will all turn with it, the bottom of the receptacle will open, and the finger 49 will travel along the pawl 67, pushing it back until the finger reaches the notch 50. The pin 18 on the shaft will engage the upper pin 30 about the same time. Upon being released, the shaft will return under the tension of the spring 15, thus carrying back the coin from between the shoulders 43, permitting it to fall out of the slot 16. Further travel of the shaft will bring the screw 17 against the arm 51, pressing it back together with the pawl 67, thus releasing the finger 49 and permitting the spring 29 to return the parts to normal position.

The articles vended are of considerable size, being indicated in dotted lines in Fig. 7. A pin 53 carried by the spring 29 projects into a small hole in the front wall of the receptacle, and when the spring is depressed by the turning of the sleeves, the pin will be forced in, as indicated by dotted lines in Fig. 7. The pin will engage the package next above the lowest one, preventing it from falling out of the receptacle when the plate 28 swings out. Any desired combination of deliveries can be effected by the position of this pin with relation to the articles to be vended.

Pivoted on the side of the receptacle is a lever 56, having an arm 57 normally engaging the articles in the receptacle through an opening 58, under tension of the light spring 59. A plate 60 at the upper end of the lever is adapted to project across the slot 10 and prevent the complete introduction of a coin when the absence of an article to be vended permits the spring 59 to swing the lower end of the lever into the receptacle through the opening 58. See dotted lines Fig. 4.

Having now explained my invention what I claim as new and desire to secure by Letters Patent is:—

1. In a vending machine, the combination of a casing, a receptacle therein adapted to receive the articles to be vended, a shaft mounted in said casing, a sleeve surrounding said shaft and a plate mounted on said sleeve forming the door at the lower end of said receptacle, a cross bar mounted for movement concentric with said shaft so that said shaft may swing said cross bar, and connections between said cross bar and said sleeve.

2. In a vending machine, the combination of a casing, a receptacle mounted therein and adapted to contain the articles to be vended, a shaft mounted in said casing, a sleeve mounted concentrically with said shaft, a door mounted on said sleeve and adapted to normally close the lower end of said receptacle, means connecting said shaft and sleeve, a spring secured to said receptacle and adapted to normally hold the door across the bottom of the receptacle, and a pin mounted on said spring and adapted to engage an article in the receptacle when said

door swings away from the bottom thereof and thus prevents said article from falling out of the receptacle.

3. In a vending machine, the combination of a casing, a receptacle therein, a shaft revolubly mounted in said casing, a sleeve mounted concentrically with said shaft, a door for the bottom of said receptacle mounted in said sleeve, connecting means between said sleeve and shaft, whereby said door may be operated by said shaft, and pawls to hold said door in open position and means under the control of said shaft for releasing said pawl and door.

4. In a vending machine, the combination of a receptacle, a revoluble shaft adjacent thereto, a sleeve revoluble thereon, a door for the receptacle mounted on the shaft, connecting means between the door and shaft whereby said shaft may operate the door, means to hold the door in open position, and means connected to the shaft for releasing the door.

5. In a vending machine, the combination of a casing and a receptacle therein adapted to receive the articles to be vended, a shaft mounted in said casing, a sleeve loosely mounted on said shaft, a door for said receptacle mounted on said sleeve, a spring to normally hold the door in closed position, connecting means whereby said shaft may swing said door to open position, a pawl to hold said door in open position, and means connected to said shaft for releasing the pawl.

6. In a vending machine, the combination of a receptacle, an operating shaft, a sleeve revoluble thereon, a door for said receptacle connected to said sleeve, a spring to normally hold the door in closing position, and connecting means between said shaft and sleeve whereby said shaft may operate the sleeve, the sleeve being returned by the spring.

In testimony whereof I have signed this specification in the presence of two subscribing witnesses.

ALDERTON TOWERS.

In the presence of—
E. M. Brown,
Edward N. Pagelsen.