May 1, 1956 R. F. PETERS 2,743,659

AIR VENT HOOD

Filed March 7, 1952

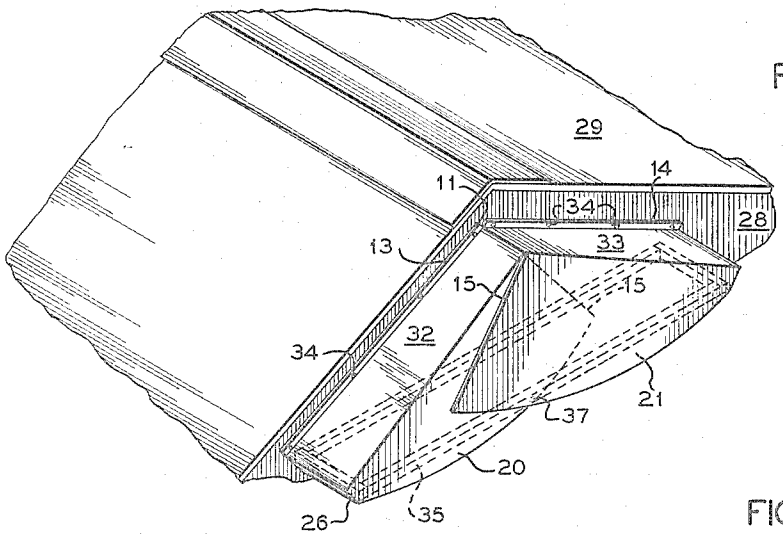

FIG. 1

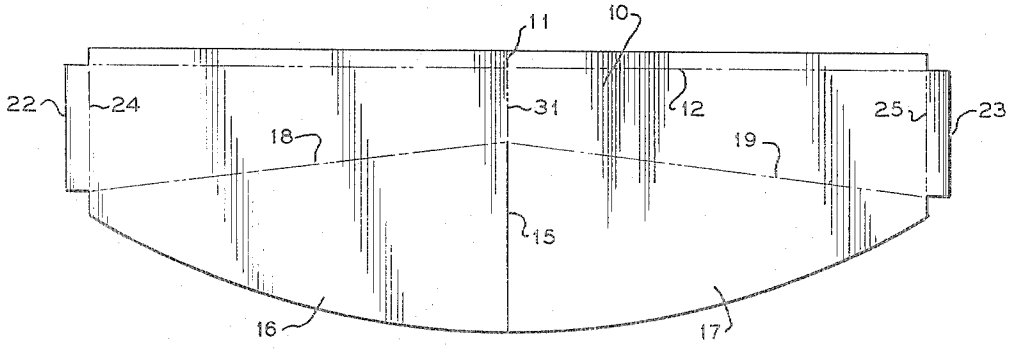

FIG. 2

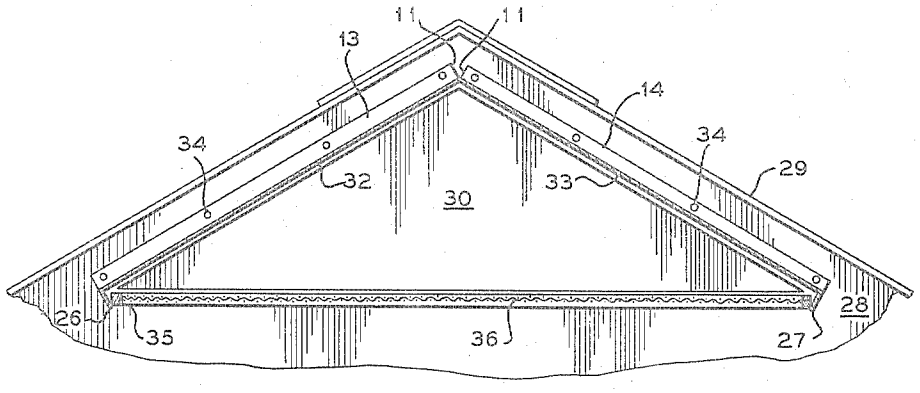

FIG. 3

INVENTOR.

R. F. PETERS

BY

Ryall & Dowell

ATTORNEY

United States Patent Office 2,743,659 Patented May 1, 1956

2,743,659

AIR VENT HOOD

Richard F. Peters, Austin, Tex.

Application March 7, 1952, Serial No. 275,325

7 Claims. (Cl. 98—42)

This invention relates to building construction and more particularly to a hood for application to the gable of a building adjacent the peak of the roof to cover the normal ventilating opening provided in such gable and at the same time prevent entry of rain, snow, sleet and the like and without materially impeding the flow of air into or out of the building.

Heretofore the majority of vent openings of this nature have been supplied with louvers or the like and these have constituted relatively expensive constructions and in which a separate size of vent opening must be provided for each building depending on the pitch of the roof. Furthermore these louvered openings materially cut down the flow of air into or out of the building since the vanes forming the louvers constitute an appreciable part of the area of the opening. These prior art structures have furthermore been relatively expensive and difficult to install in that the opening in the building must be accurately cut and the louver or other protective means accurately fitted to such opening.

It is therefore an object of this invention to provide an air vent hood for application to the gable of a building in which such hood is adjustable to any building regardless of the pitch of the roof and in which a screen may be cut and fitted in accordance with the formation of the hood upon the particular building.

It is a further object of the invention to provide an air vent hood for the gables of buildings in which such hood is formed from a single piece of sheet metal which may be easily bent to shape on the job and in which a screen may be cut to shape and installed within the hood.

Another object of the invention is the provision of an air vent hood for the gable ends of buildings which may be installed on the outer wall of such building without requiring accurate fitting to the opening provided in such wall.

It is a further object of the invention to provide an air vent hood for the gable ends of buildings which may be economically constructed of sheet metal by a simple stamping operation and in which such hood may be provided as blanks to be accurately shaped and formed to the particular building upon which the hood is to be installed by mere hand manipulation thereof.

Further objects and advantages of the invention will be apparent from the following description taken in conjunction with the accompanying drawings wherein:

Fig. 1 is a fragmentary view in perspective showing the air vent hood of this invention installed in place on the gable end of a building;

Fig. 2, a top plan view of the preformed blank which is utilized to form the air vent hood of this invention; and

Fig. 3, a longitudinal vertical sectional view showing the air vent hood installed and the manner in which a screen is secured in position.

With continued reference to the drawing there is shown in Fig. 2 a blank 10 of sheet metal or the like from which the hood of this invention is constructed the blank 10

being cut to the outline as shown in Fig. 2 and there also being a cut along the line 11, the portions of the blank on each side of the line 11 being bent along the line 12 at right angles to form flanges 13 and 14 on each side of the mid point of the blank as represented by the line 11.

The opposite side of the blank 10 from the flanges 13 and 14 is cut along the line 15 and the two portions 16 and 17 on each side of this line 15 are bent downwardly along the lines 18 and 19 to form overlapping leaves 20 and 21 as shown in Fig. 1.

The portions 22 and 23 at each end of the blank 10 are bent downwardly along the lines 24 and 25 to form flanges 26 and 27 as shown in Fig. 3, the purpose of which will presently appear.

The hood of this invention will normally be supplied in blank form as shown in Fig. 2 with possibly the flanges 13 and 14 preformed and with the remaining portion in flat condition to facilitate packing and shipping of the same. Upon arrival at the job the hood is adapted to be installed on the gable wall 28 of a building having a slanting roof 29 of any desired pitch. A triangular opening 30 of the proper size is cut in the wall 28 and the blank 10 is bent about the line 31 to the same pitch as the roof 29 thus providing inclined portions 32 and 33 extending from the line 31 to the portions 22 and 23 which are then bent downwardly to form the flanges 26 and 27. At the same time the portions 16 and 17 of the blank 10 are bent downwardly along the lines 18 and 19 to form the overlapping leaves 20 and 21 and as shown in Fig. 1 this will provide a rooflike structure having inclined roof portions 32 and 33 and the overlapping leaves 20 and 21 which form a front wall directly in front of and spaced from the opening 30. The hood is secured to the wall 28 of the building by suitable fastening means such as screws or nails extending through the apertures 34 in the flanges 13 and 14 into the wall 28 of the building thus securely fastening the hood in position.

Since it is desirable to prevent the entry of insects or small animals such as squirrels and the like into the building a screen is provided comprising a generally rectangular frame 35 to which may be secured in any desired manner screen wire 36 of sufficiently fine mesh for the purpose, this screen being secured in place by the downwardly extending flanges 26 and 27, which engage the ends of the frame 35 and by means of a fastener such as a nail or screw extending through an aperture 37 provided in the overlapping leaves 20 and 21 this fastener extending into the frame 35 of the screen. This screen is normally formed on the job in order to accurately fit within the hood which has been shaped to conform to the particular building in which the same is installed.

It will therefore be seen that by the above described invention there has been provided a relatively simple air vent hood which may be bent to shape on the job to conform to the pitch of the roof of the building on which the same is to be installed and which requires no accurate fitting within an opening in the wall of the building and likewise provides a hood which may be shipped in blank or flat condition thus utilizing a minimum of packing and shipping space. The blank which goes to make up the hood of this invention may be quickly and economically formed in a single stamping operation which includes providing the necessary cuts in the material as well as the outline thereof and also if necessary beads or scores may be provided in the surface of the blank 10 along the lines 18, 19, 31, 24 and 25 in order to indicate where the various parts of the blank should be bent and will protect the opening in the wall of the building against the entry of rain, snow or sleet and the screen will prevent the entry of insects or undesired animals. Likewise the hood of this invention will not in any way impede the flow of air

into and out of the building and the area of the opening is not reduced by vanes or any other parts of the hood. The opening for the entry of air constitutes the full area of the opening in the building minus only the area occupied by the wire forming the screen.

It will be obvious to those skilled in the art that various changes may be made in the invention without departing from the spirit and the scope thereof and therefore the invention is not limited by that which is shown in the drawings and described in the specification but only as indicated in the appended claims.

What is claimed is:

1. An air vent hood for attachment to the gable wall of a building comprising a one piece sheet metal structure having oppositely inclined roof portions, flanges extending upwardly from one edge of each roof portion for securing said hood to said wall, overlapping leaves extending downwardly from the opposite edge of said roof portions, downwardly and inwardly extending flanges at the outer ends of said roof portions, a horizontally disposed screen including a frame supported by said last named flanges and fastening means extending through said leaves and into said frame to secure said screen in place.

2. An air vent hood for attachment to the gable wall of a building comprising a one piece sheet metal structure having oppositely inclined roof portions, means on one edge of each roof portion for securing said hood to said wall, overlapping leaves extending downwardly from the opposite edges of said roof portions, downwardly and inwardly extending flanges at the outer ends of said roof portions, a horizontally disposed screen including a frame supported by said last named flanges and fastening means extending through said leaves and into said frame to secure said screen in place.

3. An air vent hood for attachment to the gable wall of a building comprising a one piece sheet metal structure formed from one piece of sheet metal and having oppositely inclined roof portions, means on one edge of each roof portion for securing said hood to said wall, overlapping leaves extending downwardly from the opposite edges of said roof portions, downwardly and inwardly extending flanges at the outer ends of said roof portions, a horizontally disposed screen supported by said last named flanges and fastening means extending through said leaves and into said screen to secure said screen in place.

4. An air vent hood for attachment to the gable wall of a building comprising a sheet metal structure having oppositely inclined roof portions, means on one edge of each roof portion for securing said hood to said wall, overlapping leaves extending downwardly from the opposite edges of said roof portions, downwardly and inwardly extending flanges at the outer ends of said roof portions, a horizontally disposed screen supported by said last named flanges and fastening means extending through said leaves and into said screen to secure said screen in place.

5. A blank for an air vent hood to be attached to the gable wall of a building comprising an elongated integral sheet of metal cut to the desired outline, a transverse cut extending inwardly along the center line from one edge of said sheet a relatively short distance, fold lines on said sheet extending from said cut to opposite ends of said sheet in spaced relation to said edge whereby the metal may be bent upwardly along said lines to form flanges, a second transverse cut extending inwardly along the center line from the opposite edge of said sheet a relatively greater distance than said first cut, a fold line between said cuts whereby said sheet may be bent along such line to form oppositely inclined roof portions having a pitch corresponding to that of the roof of the building, fold lines extending from said second cut to opposite ends of said sheet whereby the metal may be bent downwardly along said lines to form overlapping leaves and fold lines extending across said sheet in spaced relation to each end whereby the metal may be bent downwardly along such lines to form flanges.

6. A blank for an air vent hood to be attached to the gable wall of a building comprising an elongated integral sheet of metal cut to the desired outline, a transverse cut extending inwardly along the center line from one edge of said sheet a relatively short distance, fold lines on said sheet extending from said cut to opposite ends of said sheet in spaced relation to said edge whereby the metal may be bent upwardly along said lines to form flanges, a second transverse cut extending inwardly along the center line from the opposite edge of said sheet a relatively greater distance than said first cut, a fold line between said cuts whereby said sheet may be bent along such line to form oppositely inclined roof portions having a pitch corresponding to that of the roof of the building and fold lines extending from said second cut to opposite ends of said sheet whereby the metal may be bent downwardly along said lines to form overlapping leaves.

7. An adjustable weather protecting hood for air vents in the side of a building gable to prevent the entrance of precipitation and allow movement of ventilating air through the vents in an upstanding wall of the gable of a building and adapted to be used without alteration on building gables varying in angularity from a substantially obtuse angle to an acute angle, said hood serving to cover vent openings of triangular configuration which may vary over wide limits, said hood comprising sheet metal roof sections connected by integral bendable metal thereof at the ridge portion thereof and separated elsewhere, means to secure said hood to the wall of the gable with one edge of each roof section abutting an upstanding wall, a downwardly extending leaf on the other edge of each of said roof sections, said leaves being of greatest width adjacent the ridge and of lesser width adjacent the eaves of the roof sections and overlapping along their adjacent edges where they project from the ridge and where they are of greatest width to close the side of said hood away from the building whereby the vents in the upstanding wall of a gable may be covered by said hood against the passage of precipitation while allowing the passage of ventilating air.

References Cited in the file of this patent

UNITED STATES PATENTS

D. 134,337	Cutshall	Nov. 17, 1942
628,542	Kneeland	July 11, 1899
1,098,218	Boileau	May 26, 1914
1,662,100	Blum	Mar. 13, 1928
1,800,278	Bourke	Apr. 14, 1931
1,873,720	Piker	Aug. 23, 1932
1,914,728	Plym	June 20, 1933
2,458,134	Belden	Jan. 4, 1949
2,675,072	Smith	Apr. 13, 1954