March 26, 1929. B. F. KILER 1,706,886

CAMP STOVE

Filed Aug. 26, 1927

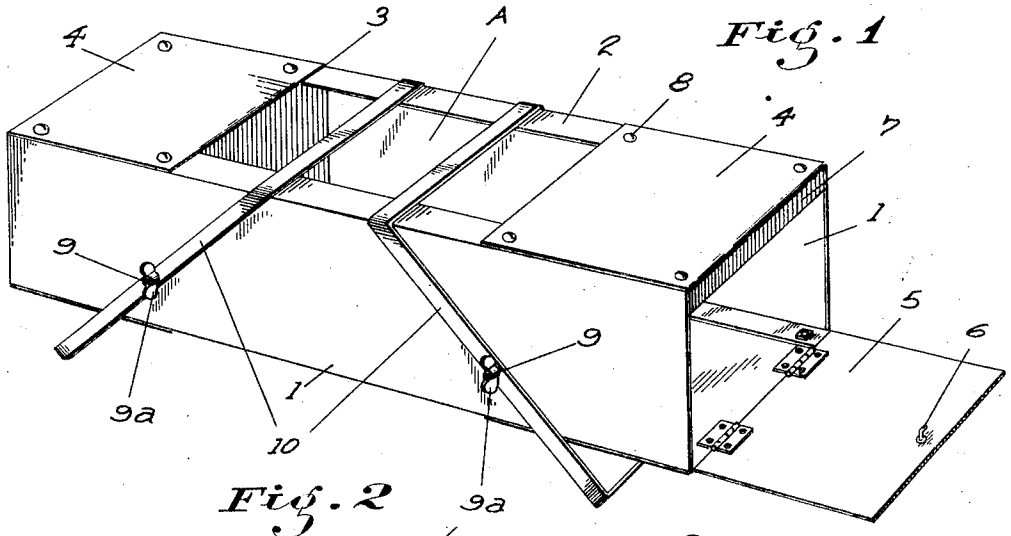

Fig. 1

Fig. 2

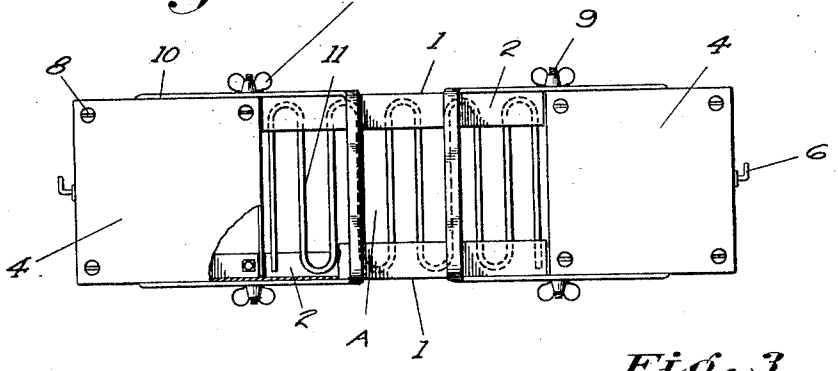

Fig. 3

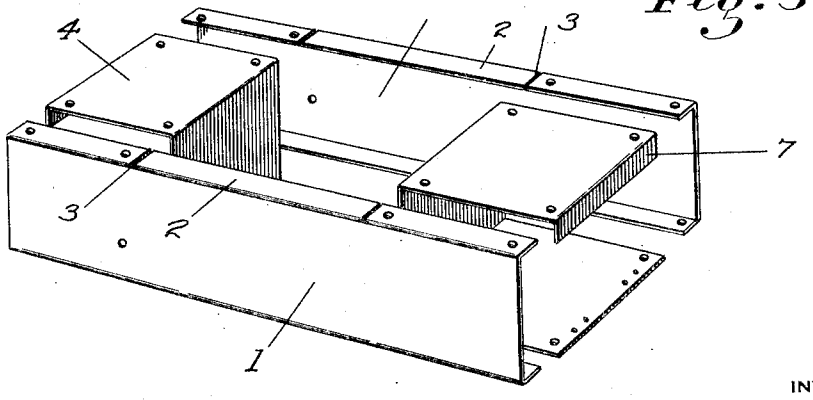

INVENTOR

B. F. Kiler

BY Percy S. Webster

ATTORNEY

Patented Mar. 26, 1929. 1,706,886

UNITED STATES PATENT OFFICE.

BENJAMIN F. KILER, OF LINDEN, CALIFORNIA.

CAMP STOVE.

Application filed August 26, 1927. Serial No. 215,643.

This invention relates to improvements in the stove art and is particularly directed to a wood burning sheet metal camp stove.

The principal object of the invention is to produce a knock down interfolding stove which will be provided with two warming or bake ovens, two cooking utensil places and rests, two cooking places, an under draft, and a combination leg, pan rests and handle.

A further object of the invention is to provide a stove which when not in use can be readily adapted to be used as a packing box and the legs previously used to support the stove to be then capable for use as a handle for the packing box, in this way minimizing the space necessarily consumed in the transportation of camp equipment.

These objects I accomplish by means of such structure and relative arrangement of parts as will fully appear by a perusal of the following specification and claims.

In the drawings similar characters of reference indicate corresponding parts in the several views:

Fig. 1 is a perspective view of the cook stove set up ready for use and showing one oven door open.

Fig. 2 is a smaller plan view of the stove as shown in Fig. 1, but showing both end doors closed.

Fig. 3 is a perspective view showing the body elements of the stove in disassociated relation.

Referring now more particularly to the characters of reference on the drawings, I first provide side plates 1 having overhanging edge flanges 2. These flanges 2 are provided with spaced apart sets of slots 3 to receive the edges of substantially rectangular ovens 4, the sides 1 when the parts are fitted together forming the closure sides for the oven. Each oven is provided with a hinged door 5 adapted to be secured in closed position by an L-pin 6 arranged to be turned into engagement with a depending flange 7 at the upper edge of each oven. As will be seen when the elements of the stove are fitted together and secured by removable stove bolts 8 there is formed a stove having an intermediate fire area A with an oven immediately adjacent each end thereof. These ovens can then be used either as warming ovens, baking ovens or for holding cooking utensils.

Through each oven is removably inserted a pin 9, and turnable on these pins outside of the stove are rectangular hoops 10 which project angularly with respect to the body of the stove and when the stove is in use as such fit against the ground and hold the stove slightly elevated, the upper straps thereof in that case engaging the top flanges 2 and forming cooking receptacle holders to be disposed above the fire.

In practice the fire is built in the space A upon the grate 11, which is in that case supported on the lower flanges 2, and inasmuch as the stove is elevated above the ground by the hoops 10 a good draft is assured, and also a well regulated cooking area is afforded both for boiling, frying and baking.

When the stove is not to be used as such, but it is desired to use it as a packing box, its cooking position is reversed, in which event the grate drops down against the opposite flanges 2, leaving an open top, and the material to be transported can be packed into the space A and the hoops 10 can then be used as handles instead of legs for the purpose of transporting the box.

It will be quite apparent to anyone that by means of the construction of the stove as shown, it can also be readily taken down and put into very compact form for storage or easy transportation when not in use.

The position of the hoops 10 relative to the body of the stove may at all times be adjusted and set if desired by means of wing nuts 9^a mounted on the ends of the pins 9.

From the foregoing description it will be readily seen that I have produced such a device as substantially fulfills the objects of the invention as set forth herein.

While this specification sets forth in detail the present and preferred construction of the device, still in practice such deviations from such detail may be resorted to as do not form a departure from the spirit of the invention, as defined by the appended claims.

Having thus described my invention what I claim as new and useful and desire by Letters Patent is:

1. A stove comprising a pair of spaced end ovens, an intermediate fireplace, and means supporting the stove in elevated position, such means comprising rectangular elements embracing the stove and resting on a supporting surface and at the same time

extending across the fire place to form supports for cooking receptacles.

2. A stove comprising side plates having inturned edge flanges, a grate supported on one set of flanges intermediate the ends of the stove, supports for the stove including receptacle holding elements projecting across the opposite flanges of the side plates, such grate being slidably disposed between the side plates and flanges, and the supports being capable of also being used as handles to transport the stove when the latter is inverted.

3. A stove including vertical side plates enclosing a fireplace area, inturned side flanges along the top and bottom edges of the plates, and a grate supported on the lower set of flanges, and movable between the upper and lower flanges whereby to enable the stove to be inverted and the grate to be then supported by the normally uppermost flanges, and handle means depending from the bottom of the stove to enable the same to be lifted when in such inverted position.

4. A stove including vertical side plates enclosing a fireplace area, inturned side flanges along the top and bottom edges of the plates, and a grate supported on the lower set of flanges, and movable between the upper and lower flanges whereby to enable the stove to be inverted and the grate to be then supported by the normally uppermost flanges, and leg members depending from the stove, said leg members serving as handles to transport the stove when the same is inverted.

5. A stove including vertical side plates enclosing a fireplace area, leg elements extending alongside the plates and pivoted intermediate their ends thereon and normally projecting in diverging relation toward their lower ends, and horizontal members connecting the upper ends of the legs and then extending across the top of the fireplace area in longitudinally spaced relation to serve as receptacle supports and to limit the diverging movement of the legs.

6. A stove including side plates enclosing a fireplace area, inturned flanges along the top and bottom edges of the plates, a grate movable between and supported by either set of flanges depending on whether the stove is held in an upright or inverted position, and means for carrying the stove in an inverted position.

In testimony whereof I affix my signature.

BENJAMIN F. KILER.