Oct. 7, 1969 L. ARCANGELI 3,470,969

HYDRAULIC BOOM PARTICULARLY FOR BLAST HOLE DRILLING METHODS

Filed April 4, 1968 2 Sheets-Sheet 1

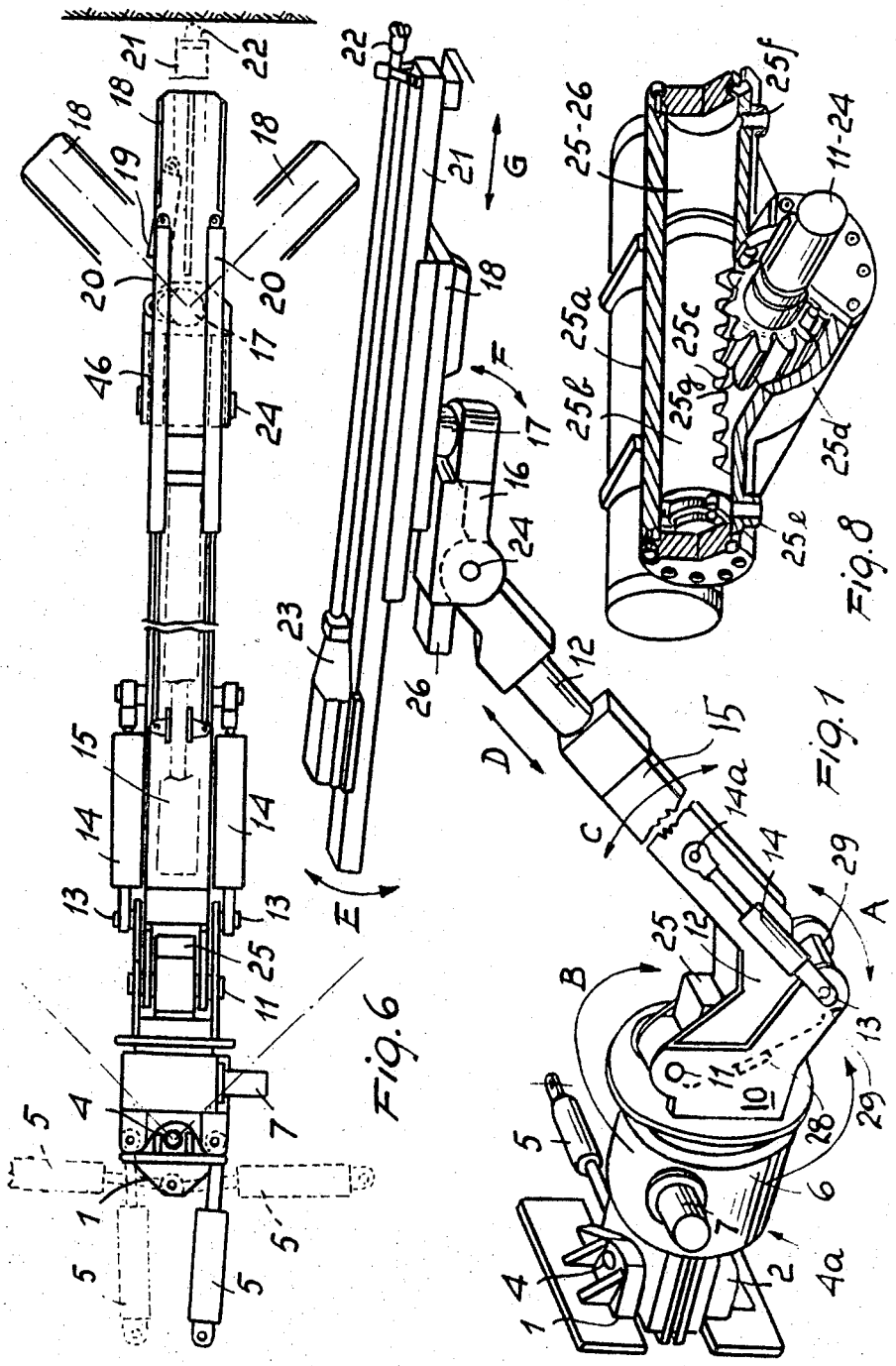

INVENTOR.
Lino Arcangeli
BY
Albert Jorif
Agents

HYDRAULIC BOOM PARTICULARLY FOR BLAST HOLE DRILLING METHODS

Filed April 4, 1968 2 Sheets-Sheet 2

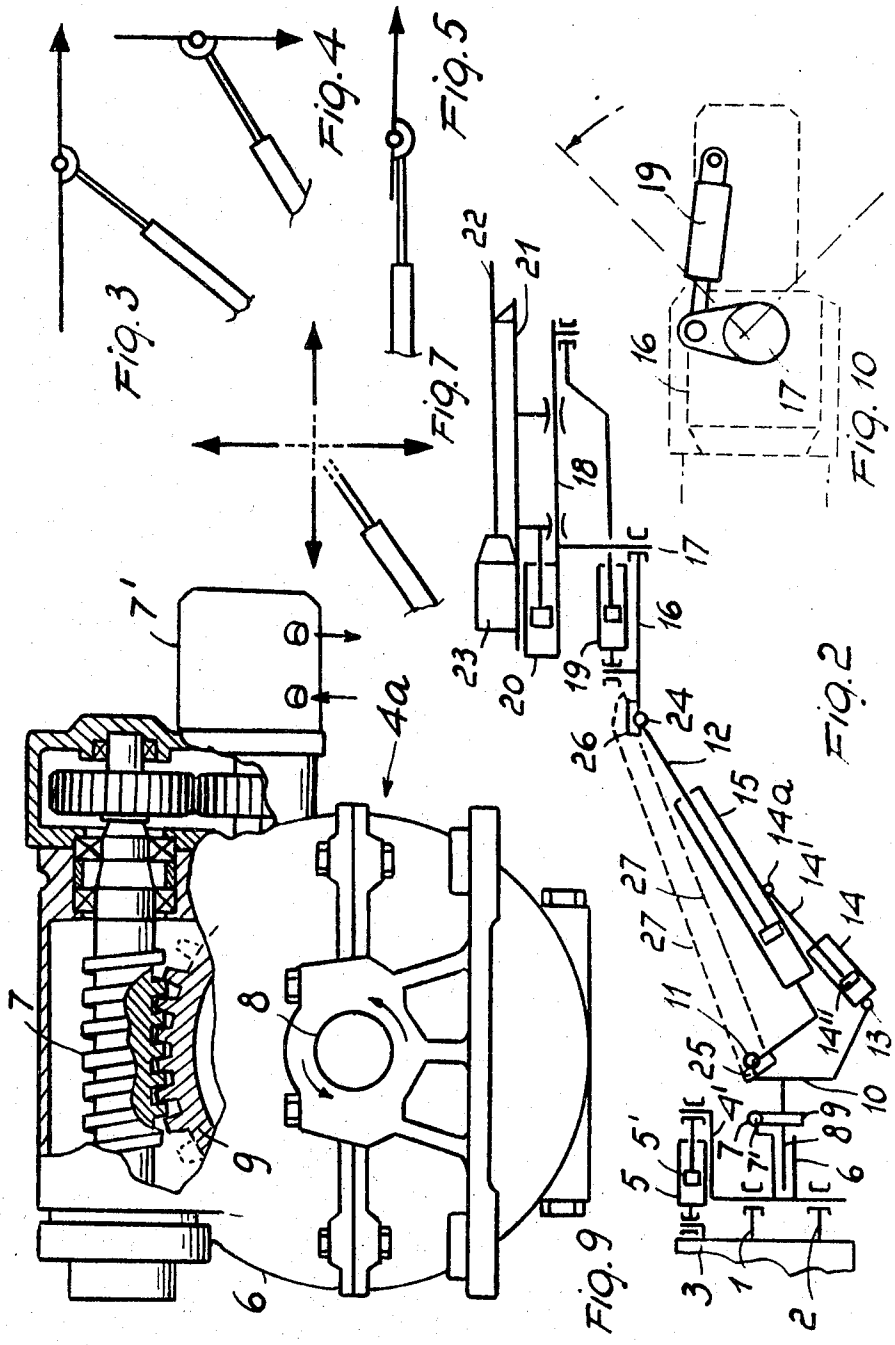

INVENTOR.
Lino Arcangeli
BY
Albert Jeff
AGENTS

United States Patent Office

3,470,969

Patented Oct. 7, 1969

1

3,470,969

HYDRAULIC BOOM PARTICULARLY FOR BLAST HOLE DRILLING METHODS

Lino Arcangeli, P.za M. A. di Savoia 5, Milan, Italy

Filed Apr. 4, 1968, Ser. No. 718,789
Claims priority, application Italy, Apr. 7, 1967, 14,684/67
Int. Cl. E21c *9/00, 5/08, 11/00*
U.S. Cl. 173—43 3 Claims

ABSTRACT OF THE DISCLOSURE

This disclosure relates to a hydraulic boom for drilling holes, including a supporting assemblage, a swingable boom member supported by said supporting assemblage, a cradle member hingedly supported on one end of said boom member and having a feed member slidably supporting a drill and power and control means for actuating and controlling the movement of the movable parts of the hydraulic boom and the drill. The hydraulic boom arrangement provides for powered adjustment of the cradle member about five pivot points relative to the supporting assemblage. The adjustment about two of the pivot points is interrelated by a closed hydraulic servo arrangement.

BACKGROUND OF THE INVENTION

This invention relates to a hydraulic boom particularly for blast hole drilling methods for mining and tunneling.

It is known that in blast hole drilling methods the distribution or coverage pattern of the drilling holes is of utmost importance. This pattern is variable depending on a number of operative conditions. In addition the direction of the drilling holes may also vary and in one and the same pattern both parallel and mutually inclined drilling holes may be adopted.

As a consequence the versatility requirements for hydraulic booms are very exacting.

One of the requirements for hydraulic booms of this type is to reduce the so-called blind spots or those areas of a surface, which cannot be correctly reached by a boom, to a minimum.

For the purpose hydraulic booms have been devised having component parts arranged to be displaced according to Cartesian coordinates. Such known booms are very complicated and their setting is time consuming since they require a great number of steering operations for reaching the selected drilling spot, with a correct setting of the drill.

SUMMARY OF THE INVENTION

An object of this invention is to provide a highly versatile hydraulic boom, simple in structure and reliable in operation which will be able practically to eliminate the so-called blind spots and will be able to cover a drilling hole pattern of any kind and which will reduce the number of steering or setting operations and the time and effort for reaching a drilling spot to a minimum.

These objects are attained by a hydraulic boom for drilling holes, including a supporting assemblage, a swingable boom member supported by said supporting assemblage, a cradle member hingedly supported on one end of said boom member and having a feed member slidably supporting a drill and power and control means for actuating and controlling the movement of the movable parts of the hydraulic boom and the drill and wherein the improvement comprises a first connecting group between said boom member and said supporting assemblage and rotatably connecting thereto one end of said boom member, said first connecting group having first

2

pivot means allowing rotation of said boom member thereabout and defining a first axis of rotation, second pivot means allowing rotation of said boom member thereabout and defining a second axis of rotation perpendicular to said first axis of rotation, and third pivot means allowing rotation of said boom member thereabout and defining a third axis of rotation perpendicular to said second axis of rotation, and wherein the improvement further comprises a second connecting group at a free end of said boom member opposite to said one end thereof and rotatably connecting said free end with said cradle member, said second connecting group having fourth pivot means allowing rotation of said cradle member thereabout and defining a fourth axis of rotation substantially parallel to said third axis of rotation, said second connecting group having further fifth pivot means allowing rotation of said cradle member and defining a fifth axis of rotation perpendicular to said fourth axis of rotation, and wherein the improvement further comprises a hydraulic servo arrangement between said fourth pivot means and said third pivot means, said servo arrangement being responsive to the rotation of said third and the fourth pivot means.

BRIEF DESCRIPTION OF THE DRAWING

A preferred embodiment of the invention will be described hereinafter with reference to the accompanying drawing in which:

FIG. 1 illustrates, in perspective view, the preferred embodiment of the hydraulic boom of this invention;

FIG. 2 shows diagrammatically in symbolic representation the assembly of the hydraulic boom shown in FIG. 1.

FIGS. 3, 4 and 5 show different settings of the shown hydraulic boom in a vertical plane, and in symbolic representation.

FIG. 6 shows a plan view of the hydraulic boom of FIG. 1 in a diverse scale and with different settings of the cradle member in a horizontal plane.

FIG. 7 shows diagrammatically in symbolic representation different settings of the boom and cradle member;

FIG. 8 shows in a perspective view one of the hydraulic actuators of the servo arrangement.

FIG. 9 shows a front view partly in section of one embodiment of a first connecting group for the boom member.

FIG. 10 shows a hydraulic jack connection for swinging the cradle member.

DESCRIPTION OF THE PREFERRED EMBODIMENT

With reference to the drawing the supporting assemblage of the boom comprises two supports **1** and **2** and a vehicle or a jumbo of which a portion of the baseplate **3** can be seen (FIG. 2) on which said supports are fixed. In said supports **1** and **2** a vertical pin **4** is pivotally supported for rotation.

The pin is a part of a first connecting group indicated generally in *4a* and rotatably connecting the boom member **12** to the supports **1** and **2**.

The connecting group *4a* can be rotated by means of one or more hydraulic cylinders **5** (FIGS. 1 and 6). The hydraulic cylinder **5** is pivoted to a part of the jumbo **3**, and its attendant piston **5'** is pivotally connected to a lug of the connecting group *4a* in a point offset with respect to said pin **4**. Supported by the pin **4** is a sleeve **6** on which a hydraulic motor **7'** which actuates a worm screw **7** is supported. Journalled in the axial bore of the sleeve **6** and coaxial therewith is a shaft **8** on which a gear **9** is keyed. The shaft **8** defines a second pivot means having an axis of rotation perpendicular to the axis of rotation defined by said first pivot means **4**. The gear **9** meshes

with the worm **7** and is driven thereby in rotation also through a full circle of 360° in either direction. In rigid relation with the shaft **8** is a fork member **10** which, through a pivot connection **11**, pivotally carries the boom **12** proper and pivotally carries at a point **13** a hydraulic cylinder **14** controlling the swinging of said boom **12**. The pivot connection **11** defines a third pivot means having an axis of rotation perpendicular to the axis of rotation of the shaft **8**.

The boom **12** may have a fixed length, however in more sophisticated embodiments, such as the illustrated one, the boom **12** can be fitted with a power cylinder **15** so as to permit an extension and retraction of the boom member. Pivoted in **24** at the free end of the boom member **12** is a short arm **16** which bears the feed unit. The feed unit may be of any known type and is briefly described hereinafter so as to facilitate the understanding of the operability of the hydraulic boom of this invention. Pivotally connected to the free end of the short arm **16**, via a pivot **17**, is a feed-carrying cradle **18** which can be rotated about the pivot **17** by means of a power cylinder **19**, arranged offset with respect to the pivot **17** and hingedly connected with one end thereof to a lateral lug of the short arm **16** and with the free end of its piston rod to a lateral lug of the cradle **18**.

The short arm **16**, pivots **24** and **17** and the servo-mechanism **26** to be described are parts of a second connecting group connecting the free end of the boom member **12** to the cradle member **18**. The cradle **18** has guide-ways on which, with the aid of a hydraulic power cylinder **20**, the feed **21** can be slid. The feed carries a drill **22** actuated, as is conventional, by a power mechanism **23**. One of the outstanding novel features of the present invention lies in that, both on the pivotal point **11** for pivoting the boom **12** and on the pivotal point **24** for pivoting the arm or supporting member **16** which carries the feed unit, there are mounted a pilot hydraulic actuator **25** and a piloted hydraulic actuator **26**, respectively of the servo-mechanism-like type, both substantially of the type shown in FIG. 8. The two rotary actuators **25** and **26** are hydraulically mutually connected in interlocked or closed circuit by means of sealed ducts **27**. The interlocked hydraulic actuators comprise each at least one cylinder **25*a***, a piston **25*b*** slidable in said cylinder **25*a***, a shaft **11** or **24** journalled in a housing **25*d*** integral with the cylinders **25*a***. On the shaft **11** or **24** a pinion **25*g*** is provided in mesh with a rack section **25*c*** rigid with the piston **25*b***. Through the pipe connections **25*e*** and **25*f*** two distant actuators of this type are connected by two pipes **27**. It will be understood that, when the housing **25*d*** is rotated about the shaft **11** (**24**) together with the cylinder **25*a***, the piston **25*b*** is displaced along the cylinder by virtue of the meshing teeth of the pinion **25*g*** and rack **25*c***. At the same time the pressure liquid within the cylinder is compressed on one side of the piston and depressed at the other side thereof. Due to the pipe connection this hydraulic action is transmitted to the distant actuator which is forced to perform piloted operations induced by the first actuator.

The shaft **11** of the pilot actuator **25** may be fastened to the fork **10**, whereas the respective cylinder may be fixed on the boom **12**. The shaft **24** of the piloted actuator **26** may be affixed to the free end of the boom **12** and its attendant cylinder **26** may be affixed on, and cause the rotation of the arm **16** which carries the feed unit. Furthermore, the described hydraulic boom has abutments or stops **28** and **29** intended to hold said boom in a substantially horizontal position when the fluid pressure drops beyond a certain value.

The closed hydraulic circuit between the two actuators **25** and **26** is connected through valve means with the general hydraulic circuits of the hydraulic power mechanisms. This circuit may be of any known kind and the relative valve means may be so arranged and controlled that the interlocking relation between the two actuators is released to enable them to rotate independently or to change the setting of the respective component parts.

It will be appreciated that by virtue of these servo-like actuators the swinging of the boom member does not cause any variation in the angular setting of the cradle **18**, since any rotation in a vertical plane of the boom member **12** induces through the actuators **25**, **26** a rotation in opposite direction of the cradle. In this way, when the cradle is set to assume a horizontal position it remains with a horizontal setting independently from the swinging movement of the boom-member **12** in a vertical plane. This greatly simplifies the operation of the boom and reduces the number of steering operation and the time necessary for covering a selected drilling pattern.

The described boom is enabled to effect, by means of hydraulic controls, the following movements which are also illustrated, by arrows A through G, in FIG. 1 of the drawing:

(A) a swinging movement of the boom in a horizontal plane.
(B) a rotational movement of the boom about the shaft **8**.
(C) a lifting rotational movement of the boom in a vertical plane.
(D) a movement of extension.
(E) a dumping movement of the feed in a vertical plane.
(F) a tilting movement of the feed in a horizontal plane.
(G) a sliding movement of the feed towards and away of the digging front area.

In the actuators **25** and **26**, the cross-sectional areas of the respective cylinders may be equal, so that, to a movement of the pilot actuator **25** an equally opposite movement of the piloted actuator **26** may correspond.

It will be apreciated thus that the setting of the boom is carried out mainly according to polar coordinates and the so-called blind spots are practically eliminated.

The size of the power cylinder **14**, two of which are advantageously provided on both sides of the boom member **12**, and of its piston **14''**, its piston rod **14'** and its hinged connection **13** and **14*a***, are so selected as to overcome the possible resisting forces created by the hydraulic actuators **25**, **26**.

I claim:

1. A hydraulic boom for drilling holes, including a supporting assemblage, a swingable boom member supported by said supporting assemblage, a cradle member hingedly supported on one end of said boom member and having a feed member slidably supporting a drill and power and control means for actuating and controlling the movement of the movable parts of the hydraulic boom and the drill and wherein the improvement comprises a first connecting group between said boom member and said supporting assemblage and rotatably connecting thereto one end of said boom member, said first connecting group having first pivot means allowing rotation of said boom member thereabout and defining a first axis of rotation, second pivot means allowing rotation of said boom member thereabout and defining a second axis of rotation perpendicular to said first axis of rotation, and third pivot means allowing rotation of said boom member thereabout and defining a third axis of rotation perpendicular to said second axis of rotation, and wherein the improvement further comprises a second connecting group at a free end of said boom member opposite to said one end thereof and rotatably connecting said free end with said cradle member, said second connecting group having fourth pivot means allowing rotation of said cradle member thereabout and defining a fourth axis of rotation substantially parallel to said third axis of rotation, said second connecting group having further fifth pivot means allowing rotation of said cradle member and defining a fifth axis of rotation perpendicular to said fourth axis of rotation, and wherein the improvement further comprises a hydraulic servo arrangement between said fourth pivot means and said third pivot means, said

servo arrangement being responsive to the rotation of said third and the fourth pivot means.

2. A boom according to claim 1, wherein said second pivot means is a shaft having a toothed gear supported thereon, and wherein said first connecting group includes a worm gear in mesh with said toothed gear and hydraulic motor actuating said worm gear.

3. A boom according to claim 1, wherein said hydraulic servo arrangement comprises a first hydraulic actuator including shaft coinciding with said third pivot means and having a pinion mounted thereon, a cylinder rotatable thereabout and a piston with a rack section rigid therewith and in mesh with said pinion, said hydraulic servo arrangement comprising further a second hydraulic actuator including a shaft coinciding with said fourth pivot means and having a pinion mounted thereon, a cylinder

rotatable thereabout and having a piston with a rack section rigid therewith and in mesh with said pinion, and duct means providing hydraulic communication between said cylinders.

References Cited

UNITED STATES PATENTS

2,638,326	5/1953	Lehner	173—43
3,226,064	12/1965	Thompson	173—43 X
3,374,975	3/1968	Bronder	173—38 X

ERNEST R. PURSER, Primary Examiner

U.S. Cl. X.R.

173—38; 248—16