United States Patent [19]

Cave

[11] **3,925,184**

[45] **Dec. 9, 1975**

[54] **ELECTROLYTIC SYSTEM FOR RECOVERING METAL FROM CHEMICAL SOLUTIONS WITH CONTROLLED PLATING CURRENT**

[75] Inventor: **Ellis K. Cave**, Garland, Tex.

[73] Assignee: **Gus A. Buder**, Eureka, Mo.

[22] Filed: **May 30, 1974**

[21] Appl. No.: **474,777**

[52] **U.S. Cl.** **204/229**; 204/109; 204/218; 204/228; 204/273

[51] **Int. Cl.²** **C25C 7/00**

[58] **Field of Search** 204/109, 228, 229, 218

[56] **References Cited**

UNITED STATES PATENTS

1,900,893	3/1933	Hickman	204/109
3,418,225	12/1968	Wick et al.	204/228 X
3,524,805	8/1970	Engelman	204/228
3,551,318	12/1970	Snook et al.	204/228
3,616,435	10/1971	Favell et al.	204/228
3,658,683	4/1972	Lagier et al.	204/229 X
3,694,341	9/1972	Luck, Jr.	204/109 X
3,715,291	2/1973	Bentley	204/229 X

Primary Examiner—John H. Mack
Assistant Examiner—W. I. Solomon
Attorney, Agent, or Firm—Lane, Aitken, Dunner & Ziems

[57] **ABSTRACT**

An electrolytic plating system in which the plating current through the cell is controlled in proportion to the metal ion concentration in the solution by means of an integrator circuit which increases and decreases amperage respectively as a function of the amount of metal ion bearing material added to the solution and the amount of metal ion leaving the solution by being plated upon the cathode of the cell. Improved apparatus for circulating the solution within the cell includes a specially adapted centrifugal impeller. An embodiment of the system is described in relation to silver recovery from photographic fixing solutions.

18 Claims, 8 Drawing Figures

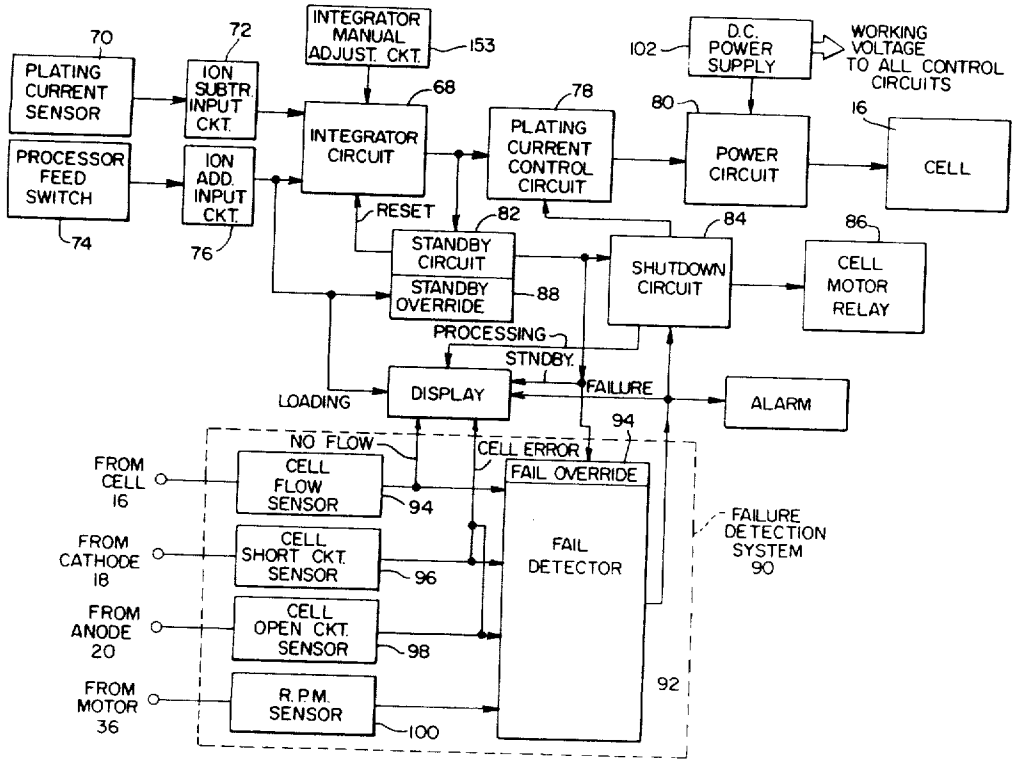

FIG. 1.

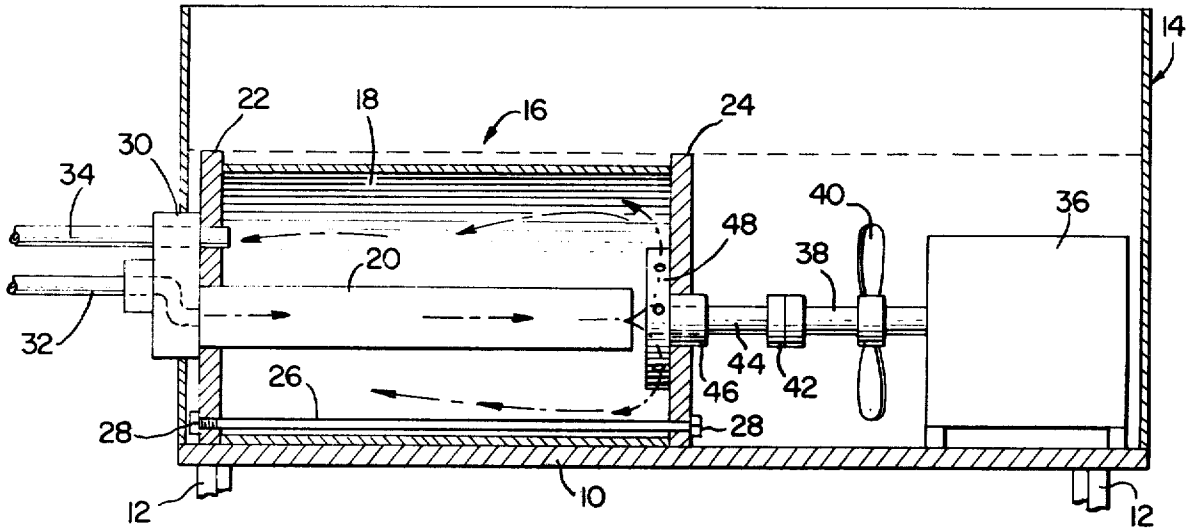

FIG. 2.

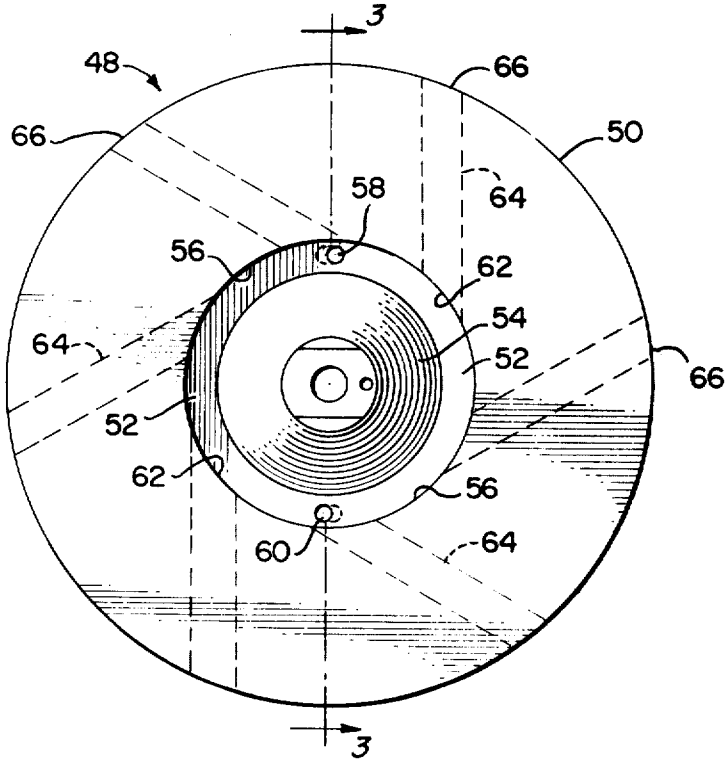

FIG. 3.

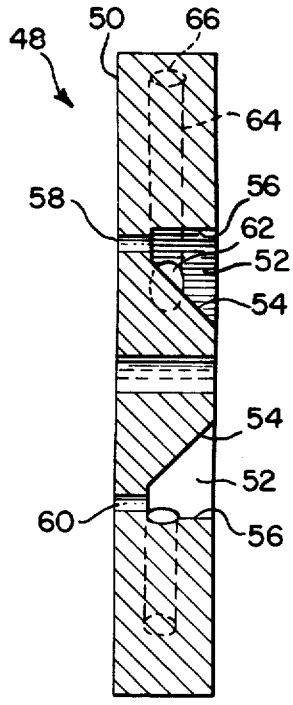

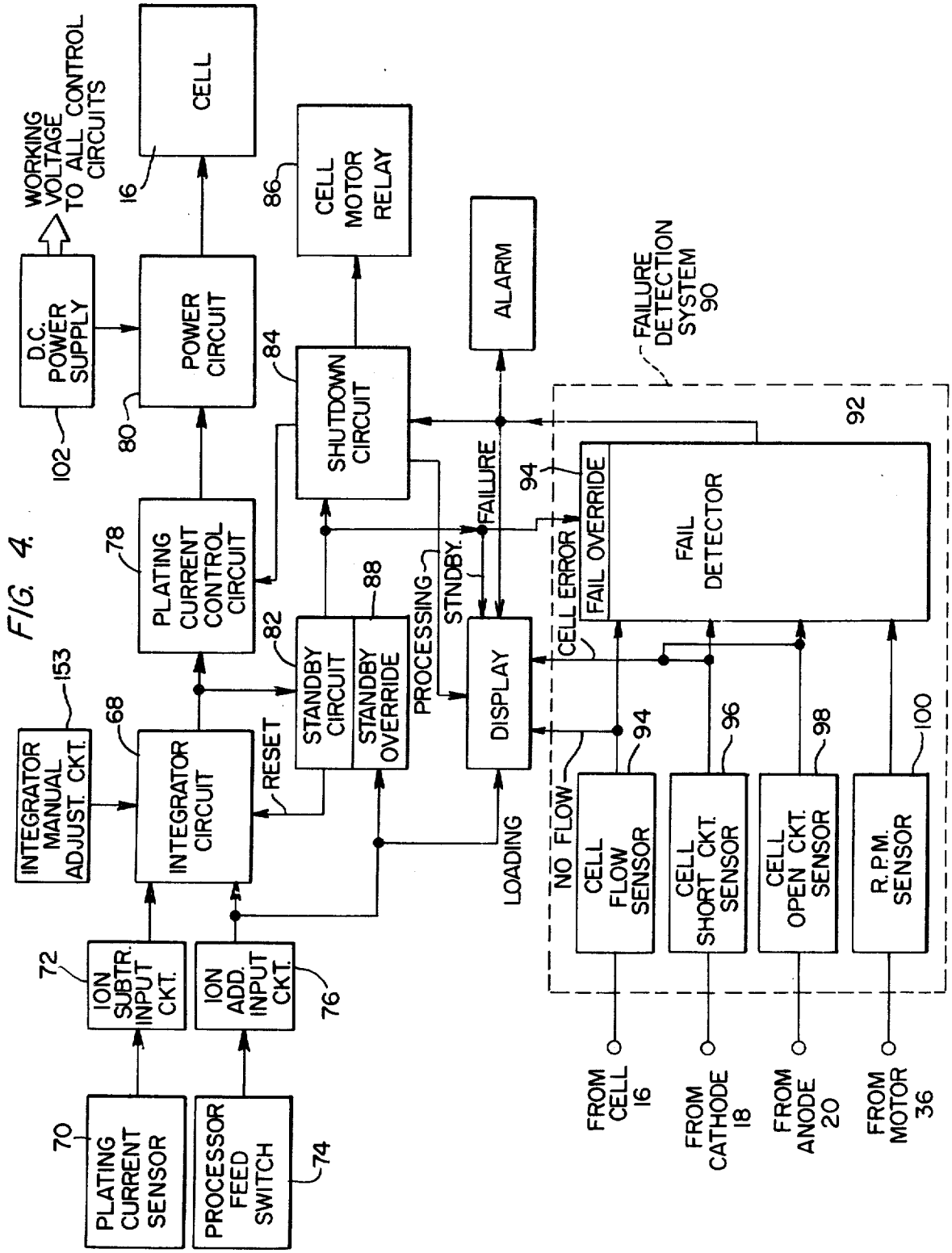
CELL
16
WORKING VOLTAGE TO ALL CONTROL CIRCUITS
D.C. POWER SUPPLY
102
POWER CIRCUIT
80
CELL MOTOR RELAY
86
ALARM
FAILURE DETECTION SYSTEM 90
92
SHUTDOWN CIRCUIT
84
FAIL DETECTOR
FAIL OVERRIDE
CELL ERROR
94
FAILURE
PLATING CURRENT CONTROL CIRCUIT
78
STANDBY CIRCUIT
STANDBY OVERRIDE
82
88
PROCESSING
STNDBY.
DISPLAY
INTEGRATOR MANUAL ADJUST. CKT.
153
INTEGRATOR CIRCUIT
68
RESET
LOADING
NO FLOW
CELL FLOW SENSOR
CELL SHORT CKT. SENSOR
CELL OPEN CKT. SENSOR
R.P.M. SENSOR
94
96
98
100
ION SUBTR. INPUT CKT.
72
ION ADD. INPUT CKT.
76
PLATING CURRENT SENSOR
70
PROCESSOR FEED SWITCH
74
FROM CELL 16
FROM CATHODE 18
FROM ANODE 20
FROM MOTOR 36

FIG. 4.

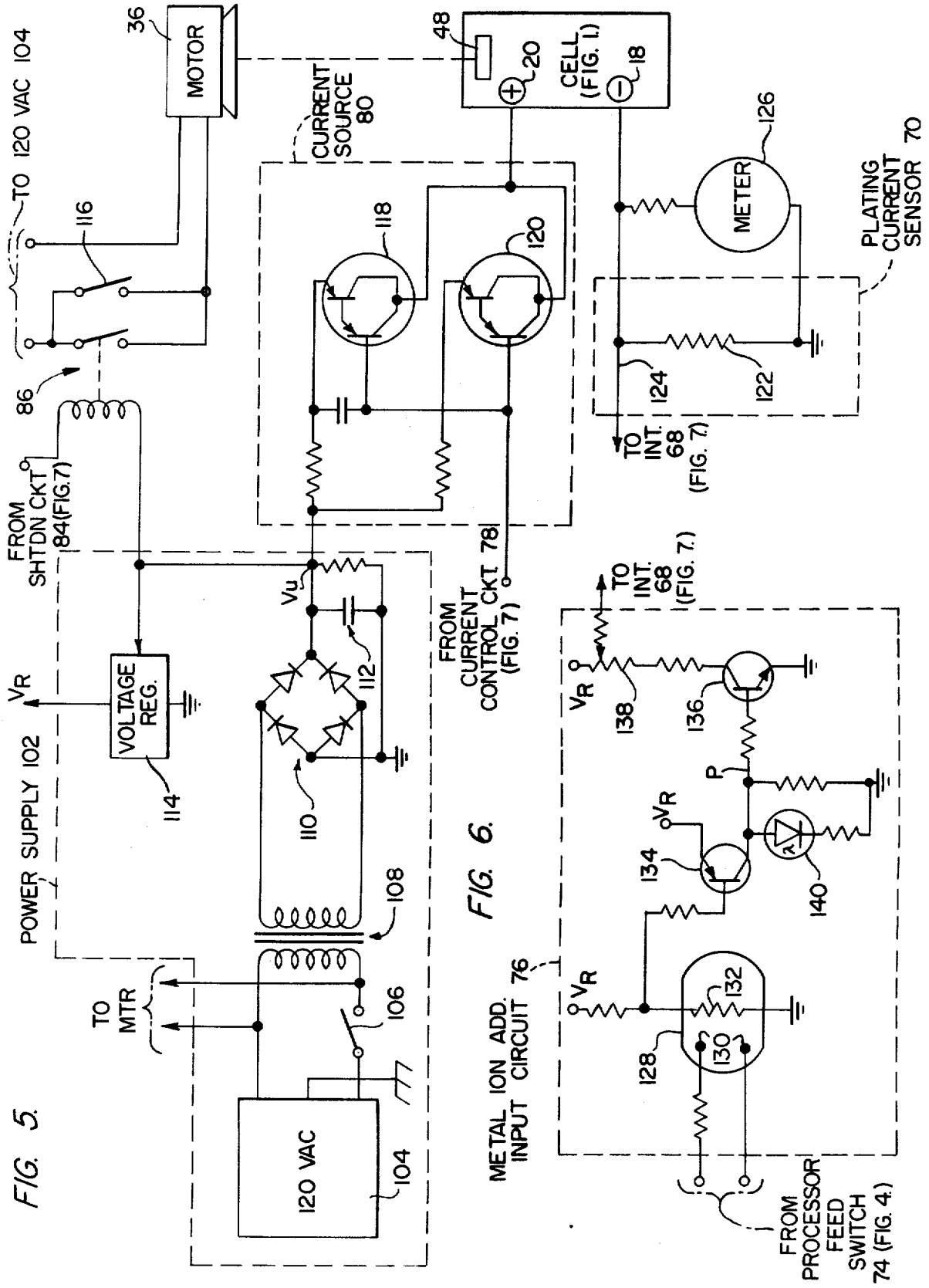
TO 120 VAC 104
36
MOTOR
48
CELL (FIG. 1)
20
18
CURRENT SOURCE 80
116
118
120
126
METER
PLATING CURRENT SENSOR 70
86
124
122
TO INT. 68 (FIG. 7)
FROM SHTDN CKT 84(FIG.7)
FROM CURRENT CONTROL CKT 78 (FIG. 7)
Vu
VR
VOLTAGE REG.
114
112
110
108
POWER SUPPLY 102
TO MTR
106
120 VAC
104
TO INT. 68 (FIG. 7)
138
136
P
134
140
132
130
128
METAL ION ADD. INPUT CIRCUIT 76
FROM PROCESSOR FEED SWITCH 74 (FIG. 4)

FIG. 5.

FIG. 6.

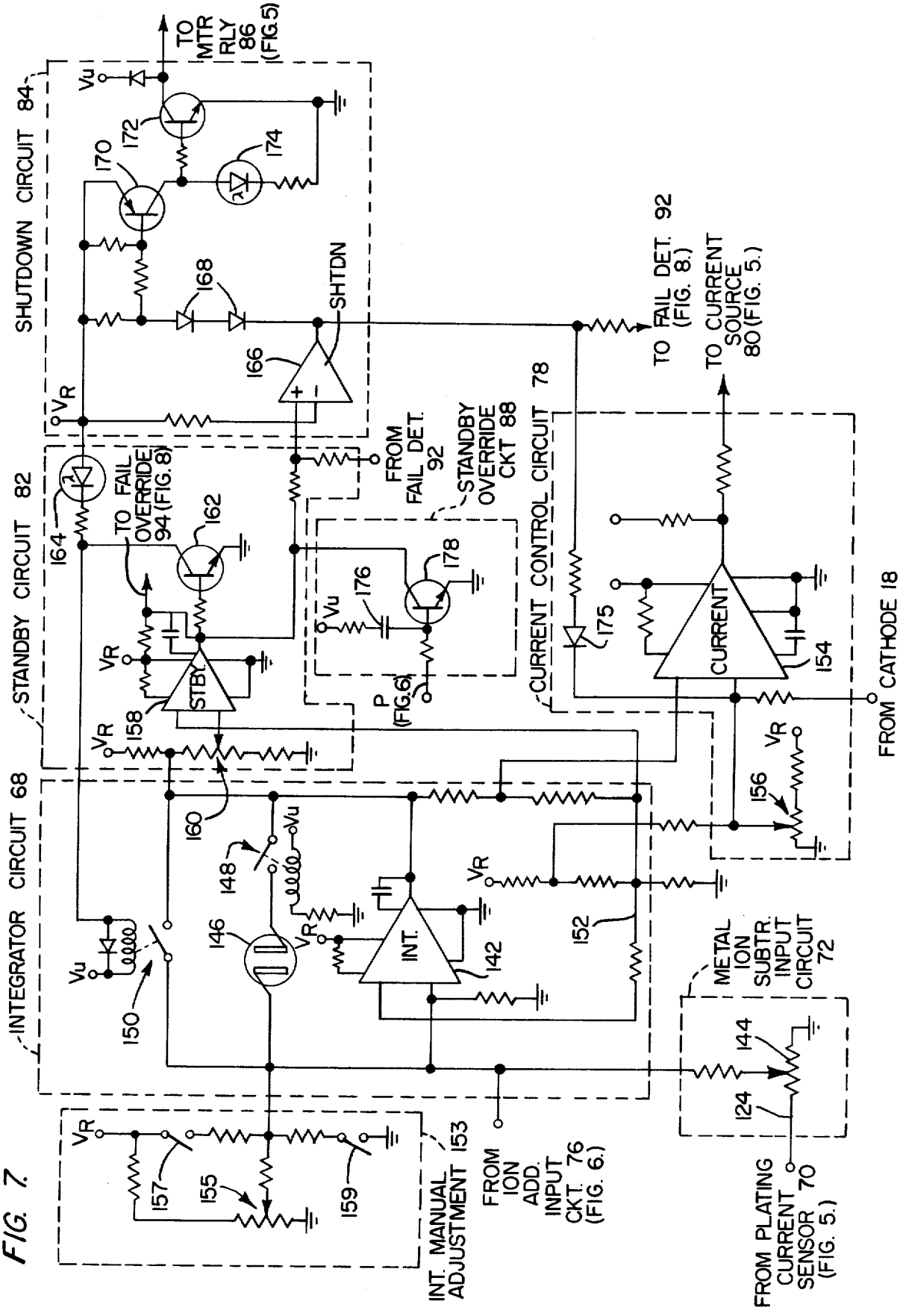
SHUTDOWN CIRCUIT 84
STANDBY CIRCUIT 82
INTEGRATOR CIRCUIT 68
CURRENT CONTROL CIRCUIT 78
TO MTR RLY 86 (FIG. 5)
TO FAIL DET. 92 (FIG. 8.)
TO CURRENT SOURCE 80 (FIG. 5.)
FROM FAIL DET. 92
STANDBY OVERRIDE CKT 88
TO FAIL OVERRIDE 94 (FIG. 8)
FROM CATHODE 18
P (FIG. 6)
INT. MANUAL ADJUSTMENT 153
FROM ION ADD. INPUT CKT. 76 (FIG. 6.)
METAL ION SUBTR. INPUT CIRCUIT 72
FROM PLATING CURRENT SENSOR 70 (FIG. 5.)
SHTDN
STBY
CURRENT
INT.
VR
Vu

FIG. 7.

FIG. 8.

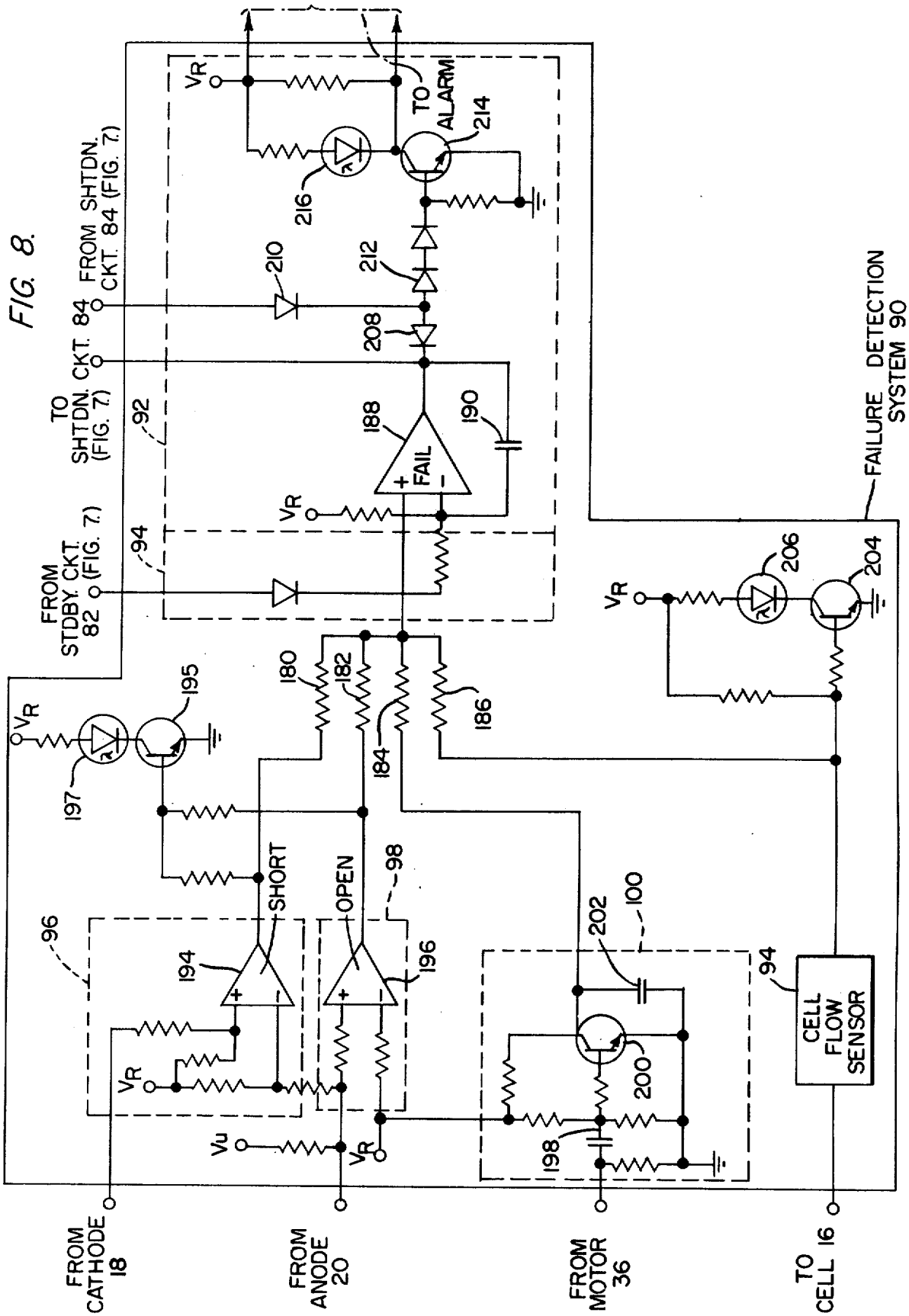
FROM SHTDN. CKT. 84 (FIG. 7)
TO SHTDN. CKT. (FIG. 7)
FROM STDBY. CKT. 82 (FIG. 7)
TO ALARM
FAILURE DETECTION SYSTEM 90
FAIL
SHORT
OPEN
CELL FLOW SENSOR
FROM CATHODE 18
FROM ANODE 20
FROM MOTOR 36
TO CELL 16
92
94
96
98
100
180
182
184
186
188
190
194
195
196
197
198
200
202
204
206
208
210
212
214
216

ELECTROLYTIC SYSTEM FOR RECOVERING METAL FROM CHEMICAL SOLUTIONS WITH CONTROLLED PLATING CURRENT

BACKGROUND OF THE INVENTION

In the processing of photographic film, chemical fixing solutions eventually become exhausted due to chemical reaction with material on the film, in particular, silver halide, with the fixer. The higher the concentration of silver salts in the fixing solution, the lower the quality of the processed photograph. In bulk processing of x-ray film, for example, the quantities of film bearing silver halide added to the fixing solution are frequently so high that a given fixing solution may loose its effectiveness in rendering high quality photographic processing and thus become exhausted in a relatively short period of time. When this occurs, the fixing solution must be discarded. The Environmental Protection Agency has set a limit on the concentration of silver salts which may be discharged into the public sewer system as waste because of the possibility of contamination. In addition to the contamination problem, the rapid exhaustion of fixing solutions results in more frequent procurement of fresh fixing solutions and loss of the monetary value of the silver carried in the exhausted solution. Accordingly, if the silver salt can be continuously removed from the fixing solution while photographic processing is carried on, the life of the solution can be greatly extended, eliminating the cost and contamination problems in accordance with the efficiency of the removal method.

One method for effecting silver ion removal is to use an electrolytic cell, which has the added advantage of recovering pure silver metal in a saleable form to further reduce the net cost of high quality photographic processing. In used photographic fixing solutions, the metal salt, silver thiosulfate, is present in both the primary and secondary dissociated state:

$$Ag^2S^2O_3 \rightleftharpoons AgS^2O^{3-} + Ag^+ \text{(Primary)} \quad (1)$$

$$AgS^2O^3 \rightleftharpoons S^2O^{3=} + Ag^+ \text{ (Secondary)} \quad (2)$$

This dissociation leaves the silver ion free to accept an electron at the cathode:

$$Ag^+ + e \rightarrow Ag^o \quad (3)$$

However, the thiosulfate ion will also accept electrons at the cathode such that:

$$S^2O^{3=} + 2e \uparrow SO^{3=} + S^= \quad (4)$$

However, if the silver ion is present, equation 3 is the preferential reaction. If the sulfide ion is produced, it will combine with silver ions,

$$2Ag^+ + S^= \rightarrow Ag^2S\downarrow \quad (5)$$

producing the precipitate silver sulfide which is an unwanted reaction. The sulfide ion will also combine with hydrogen to produce hydrogen sulfide gas:

$$2H_2O + S^= \rightarrow H_2S \uparrow + 2OH^- \text{ or } 2H^+ + S^= \rightarrow H_2S \uparrow \quad (6)$$

The production of hydrogen sulfide and silver sulfide destroys the solution, and the film processing apparatus must be cleaned before fresh solution can be added.

Prior art devices, like that shown in U.S. Pat. No. 3,694,341 issued to William R. Luck, Jr., Sept. 26, 1972, contained no means for automatically varying the length of plating time or the plating current through the electrolytic cell. If the plating current remains constant and the silver ion concentration is reduced by plating silver out on the cathode, the unwanted reaction, equation (4), becomes the preferential reaction and the sulfide ion is produced in quantity. The sulfide ions caused by excessive plating current result in the production of hydrogen sulfide and silver sulfide lessening the the quality of the solution and of the silver plated out. On the other hand, if the plating current remains constant and the silver ion concentration is increased, for example, by adding more film to the processor, the original problem obtains of failing to remove enough silver ions from the solution. Insufficient plating current results in loss of pure silver as well as a high silver ion concentration in the solution which reduces the effectiveness of the fixing solution for photographic purposes and increases the contamination of sewer systems when the solution is discarded.

One control system is known in the prior art for adjusting the voltage across the cell when a photocell detects that the reflectivity of the silver is decreasing due to acquisition by the silver being plated out of a brownish color because of reaction with the sulfide ions. But this system could work only within marginally acceptable limits, and in any event, the plating current would rarely have been optimized, if ever, in such a system. Moreover, where voltage, not current, is being controlled, the plating current is only partly controlled because it remains a function of the resistive load of the cell. In order to inhibit the production of sulfide ions characteristic of excessive plating current, prior devices have employed stirring means to promote homogeneity of the silver ion concentration throughout the cell and to prevent the depletion of silver ions near the cathode. These stirring means include curved rods and paddles to agitate the solution and/or external pumps to circulate the liquid within the cell. Voids or areas of relatively low metal ion concentration within the solution resulted because of the high rate of silver ion removal near the cathode and eddy current flow paths characteristic of such devices. Such voids necessitated less than optimum plating current thorugh the cell to prevent production of sulfide ions near the cathode.

SUMMARY OF THE INVENTION

The general purpose of the invention is to increase the efficiency of electrolytic metal ion removal systems by controlling the level of plating current and the plating time in response to sensed parmeters which in combination provide a means for determining the instantaneous concentration of silver ions in a given solution. A connected object of the invention is to improve the means for circulating the solution through the electrolytic cell.

According to the invention, an electronic integrator circuit controls the level of plating current through the electrolytic cell as a function of silver ion concentration. This system is based on an assumption that the optimum plating current in the system at any given time is a linear function of silver ion concentration represented by the equation $I = Ag(c/v)$, where small v is the volume of the fixing solution, c is a constant dependent upon the rate of dissociation of the silver salt and Ag is the total amount of silver in the system. When silver leaves the system by being plated out, the current through the cell must be reduced such that the previous equation remains balanced. The rate of removal of silver is stated by Faraday's law $dAg/dt = KI$, where K is Faraday's constant for silver. The silver concentration, and thus the plating current as a function of time, is the solution of the above differential equation, which is as

follows:

$$Ag^{+} = I_o(v/c)e^{-kt(v/c)} \quad (7)$$

where $I_o(v/c)$ is the initial current through the cell for an initial concentration and t is time.

During the time that silver ions are introduced at a uniform rate into the solution, for example, by advancing new film into the processor, a reference signal is generated. The time integral of this reference signal is calculated to represent the amount of silver added to the solution. On the other hand, as the silver is plated out and the silver ion concentration is reduced, a second reference signal, representing the instantaneous level of plating current, is generated. The time integral of this second reference signal is subtracted from the first integral. The resultant calculation represents the instantaneous quantity of silver in solution. The variable current is controlled by the result of this calculation. Hence, the plating current through the cell is increased in proportion to the quantity of metal ions that are added and decreased in proportion to the quantity of metal ions that are removed. If the rate at which metal ions are being added and removed is precisely the same, the quantity of ions in solution would remain the same and the plating current through the cell would be kept constant since the metal ion concentration would be constant.

In the preferred embodiment, an analog integrator is used to control the variable current source. The analog integrator includes an operational amplifier with capacitive feedback provided by an electrolytic capacitive element with special nonlinear "memory" properties. When a constant current is applied to the capacitive element, the voltage across the plates increases linearly as a function of time, until a particular voltage is reached, and then maintains that voltage even through the constant current is still being applied. The capacitive element will retain the maximum voltage until the same amount of charge has been removed as was added to it after reaching the maximum "holding" voltage. This holding voltage is made to correspond to the maximum current possible from the variable current source. This characteristic allows the electrolytic cell to operate at the system's maximum efficiency regardless of the current limitation inherent in the system.

In the mechanical portion of the metal recovery system, a centrifugal impeller is mounted in the electrolytic cell and connected to an external motor by a horizontal shaft through one sidewall of the cell. Rotation of the impeller causes ion laden solution entering the electrolytic cell through a hollow anode to be drawn into orifices formed in the impeller and to be discharged through offset ducts in the impeller by centrifugal force, outwardly toward a coaxial cylindrical cathode, creating a homogenous solution about the cathode surface. The action of the liquid in turn creates a vortex with a characteristic pressure differential from the center to the inner side wall of the cathode causing ion free solution to exit through a port near the inner side wall of the cathode. The centrifugal impeller represents an improvement over the multi-bladed impeller disclosed in the above-mentioned patent.

In the control system, when the output of the integrator is reduced to a predetermined minimum level corresponding to a zero concentration of silver ion in the solution, a standby system stops the motor to save wear on the bearings and sets the integrator to zero halting the plating current to prevent accumulated errors in the integrator output after a number of such standby conditions have occurred. When more film, for example, is added to the processor, the first reference signal to the integrator is resumed, with a concomitant resumption of proportional plating current through the electrolytic cell.

A special failure detection system is used to shut the system down under predetermined conditions including failure of the motor, lack of flow through the electrolytic cell, or an open or short circuit through the cell.

BRIEF DESCRIPTION OF THE DRAWINGS

FIG. 1 is a diagrammatic sectional view of the mechanical portion of the system, according to the invention, embodying the centrifugal impeller.

FIG. 2 is a plan view of the impeller of FIG. 1.

FIG. 3 is a sectional view taken along lines 3—3 of FIG. 2.

FIG. 4 is a block diagram of the electronic control system of the invention.

FIG. 5 is a schematic diagram illustrating the power supply, motor circuit, current power circuit and plating current sensor of FIG. 4 in more detail.

FIG. 6 is a schematic diagram illustrating the ion addition circuit of FIG. 4 in more detail.

FIG. 7 is a schematic diagram illustrating the ion subtraction input, integrator, standby, shutdown and current control circuits of FIG. 4 in more detail.

FIG. 8 is a schematic diagram illustrating the failure detection system of FIG. 4 in more detail.

DESCRIPTION OF THE PREFERRED EMBODIMENTS

FIG. 1 illustrates the mechanical unit incorporating the electrolytic cell and the mechanism for circulating the fixing solution through the cell. A base **10** supported by resilent feet **12** is attached to a removable housing **14** which encases the electrolytic metal ion recovery cell **16** and circulation mechanism when in operation. The electrolytic cell **16** includes a removable stainless steel cylinder **18** which forms the cathode and a hollow platinum coated titanium anode **20** coaxially arranged within the cathode **18.** The ends of the elctrolytic cell **16** are defined by a pair of opposing nonmetallic end plates **22** and **24** each attached to the base **10.** Each end plate **22, 24** contains a plurality of aligned holes in a circular pattern such that rods **26** (only one of which is shown in FIG. 1) may be passed therethrough. The ends of each rod **26** extending beyond the respective end plates are threaded to accept nuts **28.** Tightening the nuts **28** on all of the rods **26** causes the end plates **22** and **24** to be sealingly seated against the circular ends of the cylindrical cathode **18.** The anode **20** within the cell **16** is supported at one end which passes through a sealed opening in the end plate **22** which is rigidly attached to a manifold block **30** such that solution may be introduced through the hollow anode **20** via an intake hose **32** which is in fluid communication with the fixing solution bath (not shown). An outlet hose **34** is connected via the manifold block **30** to an offset exit port in the end plate **22** near the inner periphery of the cathode **18,** through which solution is discharged from the cell **16** back to the fixing bath.

A motor **36** rigidly supported by the base **10** has an output shaft **38** which drives a cooling fan **40.** The shaft **38** is further connected via coupling **42** to a second

shaft **44** which extends through a sealed bearing **46** in the other end plate **24** of the cell **16** and is finally connected to a centrifugal impeller **48** coaxially mounted within the cell **16** between the open end of the anode **20** and the end plate **24.**

The impeller **48,** as shown in more detail in FIGS. **2** and **3,** includes a nonmetallic disc-shaped body **50** having a coaxial circular groove **52** facing the open end of the anode **20** (FIG. **1**). The groove **52** has a conical inner wall **54** whose surface is inclined at a 45° angle relative to the axis of rotation and an outer cylindrical sidewall **56.** Oppositely canted ports **58** and **60** are formed through the floor of the groove **52** diametrically opposite from each other to force fluid from the groove **52** to the rear of the impeller **48** to eliminate air bubbles which would otherwise form and remain in the region between the impeller **48** and the end plate **24.** Air bubbles can interfere with the sealed bearing **46** which functions properly when it is completely wet.

Six equally spaced ports **62** are formed in the sidewall **56** of the groove **52.** When the impeller is rotating, fluid is drawn through the ports **62** and respective ducts **64** formed through the impeller body **50** and exhausted through respective exit ports **66** equally spaced about the cylindrical periphery of the impeller body **50.** The ducts **64** are directed approximately tangentially away from the circular groove **52** in the plane of rotation of the impeller **48** such that fluid is centrifugally forced through the ducts **64** and out the exit ports **66** when the impeller is rotating in the direction indicated in FIG. **2.**

The rotation of the impeller **48** causes ion-laden solution entering the electrolytic cell **16** (FIG. **1**) through the hollow anode **20** to be redirected toward the cylindrical cathode **18** creating a homogenous solution in the vicinity of the inner sidewall of the cathode. The action of the liquid in turn creates a vortex which produces a radial pressure gradient in the cell **16.** The pressure at the axis or center line of the cell is less than the pressure at the cathode wall, and thus differential is the mechanism by which fluid is drawn through the hollow anode **20** and forced out along the cathode **18** and ultimately through the exit hose **34.** The need for an external pumping means is thus eliminated completely. The horizontal mounting arrangement for the unit lowers its center for gravity and permits convenient location of the unit under a table, for instance, without interfering with the fluid vortex and plating uniformity.

The functional block diagram of the electronic control system for the metal recovery unit illustrated in FIG. **1** is shown in FIG. **4.** The functions of the control system, specifically adapted for photographic fixing solutions, are to vary the plating current through the cell **16** in proportion to the metal ion concentration and to turn off the cell motor **36** and the plating current when the ion concentration is zero, referred to as the "standby" mode, or when a predetermined failure condition has been detected, such as a short circuit through the electrolytic cell **16.**

The heart of the system responsible for maintaining the proper level of the plating current is an integrator circuit **68** receiving control inputs representing (1) the rate at which silver is being plated onto the cathode **18** in the cell **16** and (2) the rate of introduction of silver ion bearing film. A plating current sensor **70** provides the integrator input via an ion subtraction input circuit **72** representing the rate at which silver is being removed from the cell **16.** A processor feed switch **74** provides a constant signal input to the integrator circuit **68** via an ion addition input circuit **76** during the time that fresh film is added to the photographic processing system. The assumption is made that film is mechanically introduced into the processing system at a uniform rate such that the total time taken in advancing a standard size film into a processor is directly proportional to the quantity of silver ions introduced thereby into the solution. The output of the integrator circuit **68** represents the time integral of the rate at which silver ions are added to the solution less the rate at which silver ions are removed from the system by plating. Hence the integrator circuit output is proportional to the net silver ion concentration in the cell at any given time. The output of the integrator circuit **68** is passed via a plating current control circuit **78** to control a power circuit **80** which supplies plating current to the cell **16** in accordance with the output of the integrator circuit **68.**

After a period of time following the last introduction of film with silver ions into the solution, the silver ion concentration in the cell **16** will be reduced to zero, barring the addition of new film into the processor. At this point, the plating current should be shut off and the motor **36** (FIG. **1**) circulating the fixing solution should be stopped to preserve its bearings. A standby circuit **82** monitoring the output of the integrator circuit **68** senses a minimum output of the integrator circuit, which will always be slightly above zero because it should be set to lag the ion concentration slightly and can only be assymptotic to zero. The standby circuit **82** causes the integrator output to be reset to zero and issues an output command to a shut-down circuit **84** which turns off the plating current by means of the plating current control circuit **78** and shuts off the motor by means of a cell motor relay **86.** A standby override circuit **88** causes the control system to resume operation when new silver ions are added to the cell **16** as sensed by the processor feed switch **74.**

A failure detection system **90** is also used to signal the shutdown circuit **84** to turn off the plating current and the cell motor in the event of the occurrence of specific failures. There are four modes of failure: (1) a lack of flow of liquid through the cell **16,** (2) a short circuit between the electrodes of the cell **16,** (3) an open circuit between the electrodes, and (4) failure of the motor **36.** A central fail detector **92** receives inputs from a cell flow sensor **94,** a cell short circuit sensor **96** and open circuit sensor **98** and an r.p.m. sensor **100.** The failure signal from the fail detector **92** is inhibited by a fail override circuit **94** during the standby mode when the motor and plating current are supposed to be off.

FIGS. **5–8** illustrate a specific embodiment of the control system according to the invention. In FIG. **5** a D.C. power supply **102** includes a source **104** of standard 120 volt alternating current which is connected via a master switch **106** to a transformer **108** providing a low voltage output (e.g., **10** volts) to a full wave rectifier bridge circuit **110.** The output of the bridge circuit **110** is smoothed by the resistive-capacitive (RC) integrator circuit **112** and passed as the unregulated voltage, V_u, to an integrated circuit voltage regulator **114.** The unregulated voltage V_u is nominally 10 volts and the regulated voltage output of the regulator **114,** V_R, is 6 volts, for example.

The motor **36** spinning the impeller **48** in the cell **16** receives power from the **120** volt source **104** via the master switch **106** and the motor relay **86** which is en-

ergized by the voltage V_u while processing is carried on. A manual override switch **116** is provided to energize the motor if desired when the system is in a standby or failure mode.

The power circuit **80** (FIG. **5**) comprises a pair of dual power transistors **118** and **120** connnected as illustrated to the unregulated voltage V_u. The plating current output of the power circuit **80** is connected to the anode **20** in the cell **16.** The bases of the tandem power transistors **118** and **120** are connected in common to receive the control signal from the current control circuit **78** in order to vary the level of plating current.

The plating current sensor **70** includes a grounded sense resistor **122** connected to the cathode **18** of the cell **16.** The feedback signal on lead **124,** passed to the ion subtraction input **72** of the integrator circuit **68** is connected in parallel with the sense resistor **122** to the cathode **18** to develop a voltage signal proportional to the plating current. A meter **126,** calibrated in Troy ounces, is connected in parallel with the sense resistor **122** to guage the quantity of silver plated on the cathode **18** in the cell **16.** A conventional "bubble" electrolytic cell may be used for meter **126.**

The metal ion addition input circuit **76,** shown in FIG. **6,** includes an opto-isolator unit **128** having a lamp **130** connected to the processor feed switch **74** (FIG. **4,** e.g., a microswitch) which indicates that film is being advanced in the processor. When this switch is closed, voltage is provided to energize the lamp **130** in the opto-isolator. The light from the lamp is detected by a photoresistor **132.** The output signal from the opto-isolator **128,** connected as illustrated, is transmitted through transistor switching amplifier **134** and **136** and an input rate setting potentiometer **138** to the integrator circuit **68** (FIG. 7). A light emitting diode (L.E.D) **140** is connected as illustrated to the output of the transistor **134** to indicate that film is being loaded into the processor. When the film has been advanced through the processor and no new film has been added, the processor feed switch **74** opens turning off the lamp **130.** Interrupting the output of the opto-isolator **128** turns off the transistors **134** and **136** and the L.E.D. **140.** Accordingly, the output of the ion addition input circuit **76** is a step function which is at a particular level set by the potentiometer **138** when film is being advanced in the processor.

In FIG. 7 the integrator circuit **68** includes an operational amplifier **142** connected as illustrated in the form of a conventional integrator circuit. The output of the metal ion addition input circuit **76,** taken from the potentiometer **138** is connected as illustrated to one input of the operational amplifier **142.** The same input of the operational amplifier is connected in parallel to the metal ion subtraction input circuit **76** which feeds the plating current signal on lead **124** to the integrator via a potentiometer **144** which is used to set the "removal" rate. The rate of change of the concentration of metal ions in the solution depends, of course, on the volume of the solution. Thus, the input rates of metal ion addition and subtraction must be established beforehand by means of the respective potentiometers **138** and **144** in the input circuits **76** and **72.** For this purpose, the potentiometers **138** and **144** may be calibrated in terms of volume, for example.

The integrator circuit **68** includes a special capacitive element **146** connected across the output and the signal input of the operational amplifier **142** to form an analog integrator. The capacitive element **146** is preferably an "energy storage cell" (manufactured by Ionics Division of Gould, Inc.) which functions in a manner similar to a conventional capacitor. The voltage across the element **146** increases with charge up to a predetermined maximum voltage whereupon the voltage across the device remains constant with further increases in charge. When the device **146** is discharged, the voltage will again remain constant until the same amount of charge has been discharged therefrom which was applied thereto during the constant voltage segment of its operation. With the futher removal of charge from the device **146,** the voltage will decrease again following the same curve that it followed when the voltage was increasing. One advantage of using the special capacitive element **146** instead of a standard capacitor, whose voltage is limited only by dielectric strength, lies in the fact that the variable current source **80** does not have unlimited current capacity but will provide plating current up to a predetermined maximum plating current. The special element **146** makes additional signal limiting circuitry unnecessary. Also the large effective capacitance that the energy storage cell provides makes the integrator circuit considerably simpler.

A relay switch **148** is connected in series with element **146** and is closed when energized by the unregulated voltage V_u. Thus when the master switch **106** (FIG. **5**) is opened or power fails, the element **146** retains its charge so as to "memorize" the last calculation of the integrator circuit **68.** Another relay switch **150** is connected in parallel with the capacitive element **146** so as to discharge the element **146** when the standby mode occurs at zero ion concentration. The dissipation of whatever charge is left on element **146** by means of the relay **150** insures that when new film is advanced into the processor the integrator output will start increasing from zero. Otherwise, errors would accumulate over a period of time covering a number of instances in which the standby mode was entered and the plating current shut off. The other input to the amplifier **142** is connected as illustrated via lead **152** to a reference voltage.

An integrator manual adjustment circuit **153** includes an integrator balance potentiometer **155** connected to the signal input to the operational amplifier **142** providing a common setting function to zero both the ion input rate and the ion removal rate which are independently set by the potentiometers **138** and **144** respectively. The signal input to the amplifier **142** is also connectible to the regulated voltage V_R through switch **157** and to ground through switch **159** connected through resistors as illustrated in order to artificially increase or decrease the signal input to the amplifier and thus the plating current, if desired, for example, during testing.

The current control circuit **78** includes an operational amplifier **154** which is connected as illustrated to receive the output of the integrator circuit **68,** that is, the output of the operational amplifier **142.** The operational amplifier **154** also receives a negative feedback signal voltage from the cathode **18** of the cell **16.** This negative feedback signal voltage corresponds in amplitude to the amplitude of the current flowing through the cell **16** and serves to maintain the cell current constant for the given output signal voltage from the integrator **68** even though the load represented by the cell **16** changes. Thus, the plating current control circuit and the power circuit **80** function in combination as a variable current source to apply a current to the cell **16**

corresponding to the output signal voltage of the integrator circuit **68** regardless of the load represented by the cell **16.**

A potentiometer **156** connected as illustrated between a reference voltage and one input of the operational amplifier **154** provides a means for setting the output of the operational amplifier **154** and the current applied to the cell **16** to the correct level so that when the output of the integrator circuit **68** is zero, the plating current through the cell will also be zero.

The standby circuit **82** has another operational amplifier **158** connected as illustrated to receive the output of the integrator circuit **68.** The function of the standby circuit **82** is to compare the output of the integrator circuit **68** to a reference level in order to detect the pre-established minimum output of the integrator circuit **68** which corresponds to a zero ion concentraton. The minimum level is set by means of a potentiometer **160** intercepting the output of the integrator circuit **68** to the standby circuit amplifier **158.** The output of the standby operational amplifier **158** indicative of the predetermined minimum level for the integrator output is connected as illustrated to a transistor **162.** When the standby mode occurs, the transistor **162** causes the relay switch **150** in the integrator circuit **68** to be energized, thus discharging the capacitive element **146** in order to reset the integrator to zero. The transistor **162** is also connected to energize an L.E.D. **164** which, when lighted, indicates the standby mode.

The output of the standby amplifier **158** is connected in parallel to the input to the shut-down circuit **84** whose function is to shut off the plating current and the motor **36.** The circuit **84** includes a simple operational amplifier **166,** which may be implemented by a Norton amplifier, connected as illustrated to transmit the output of the standby amplifier **158.** The output of the shut-down amplifier **166** is connected via diodes **168** to transistor amplifiers **170** and **172** which are in the conducting state when the electrolytic cell is in operation, that is before the standby mode is reached. An L.E.D. **174,** connected as illustrated to the output of the transistor **170,** is lighted to indicate the processing mode. When the standby signal is transmitted via the shut-down amplifier **166,** the diodes **168** are biased off thus causing the voltage to rise at the base of transistor **170** cutting it and transistor **172** off along with the L.E.D. **174.** As a result, the voltage at the output of transistor **172** rises to the unregulated voltage V_u which causes the motor relay **86** (FIG. **5**) to be de-energized since the other side of the relay coil is also connected to V_u. De-energizing the motor relay **86** causes the motor circuit to be opened. The motor **36** is automatically shut off in the standby mode to preserve its bearings so that a less expensive motor may be employed. The output of the shut-down amplifier **166** is also passed to the current control circuit **78** via the diode **175** to the input of the current control amplifier **154** to set its output at zero thus cutting off the plating current altogether.

The standby override circuit **88** receives the input signal P which is the output of the transistor **134** (FIG. **6**) in the ion addition input circuit **76.** In the override circuit **88,** the lead with the input signal P is connected to a transistor **178** interconnected as illustrated with the transistor **162** in the standby circuit **82.** When the signal P indicative of film loading first occurs, the transistor **178** will be turned on so as to turn off the transistor **162** in the standby circuit. This condition will remain as long as film is being loaded. Turning off the transistor **162** in the standby circuit causes the reset relay **150** in the integrator circuit to be de-energized to return to the open condition and allow the capacitor element **146** to receive charge via the metal ion addition input circuit **76.** This allows the film input to start the integrator. Once the integrator has started charging, the standby circuit **82** will hold the reset relay **150** de-energized. The series capacitor **176** and resistor connected to the base of the transistor **178** allows the machine to recover from a power failure or power off condition. When power fails, the last calculation value is preserved in cell **146** because relay **148** opens immediately upon power failure. When circuit power returns, current will initially flow in capacitor **176** as V_u rises. Thus transistor **178** is rendered conductive to keep transistor **162** turned off and the relay switch **150** from closing during power-up transients. When the capacitor **176** in the override circuit **88** becomes charged, the transistor **178** is no longer able to cut off the transistor **162** in the standby circuit **82.** However, the capacitor **176** is chosen to provide a delay so that the standby circuit is disabled for a sufficient period of time to allow the circuit to stabilize and power-up transients to cease. The capacitor **176** thus functions to prevent the system from losing its memory as a result of power failure and the system will resume operation at the same point at which it was interrupted when power failed.

The failure detection system **90,** shown in FIG. **8,** includes four resistors **180, 182, 184** and **186** receiving respective error signals connected in parallel to the input of a simple operational amplifier **188,** which may again be implemented with a Norton amplifier. A capacitor **190** connected around the amplifier **188** provides an integration effect which requires persistence of a given fail signal for a set time interval before an output signal is produced by the amplifier **188.**

The resistor **180** in the detection system is connected to the cell short circuit error detector **96** which includes an operational amplifier **194,** which may be a Norton amplifier, connected as illustrated to the cathode **18** and anode **20** of the cell **16.** If the cell should become shorted, this will cause a drop to zero in voltage across the cell which will be detected by the short detector amplifier **194.** The open circuit detector **98** includes an operational amplifier **196** connected as illustrated to the anode **20** of the cell **16.** The power circuit **80** will provide the current determined by the control circuit **78** to the cell **16** regardless of the load provided by the cell. As a result an open circuit in the cell will cause a rise in voltage at the anode **20** which will be detected by the open circuit amplifier **196.** The outputs of the short circuit and open circuit amplifiers **194** and **196** are connected in common to an indicator circuit comprising a transistor **195** and an L.E.D. **197** connected as illustrated to provide a common indication of a cell error of either type. The r.p.m. sensor **100** includes an input from a photocell (not shown) detecting light reflected from a pattern on the drive shaft of the motor **36** to produce an A.C. signal input via a decoupling capacitor **198** to a transistor **200** whose output is connected in parallel to a low pass capacitor **202** which converts the output to a D.C. signal indicative of r.p.m. passed to the sense resistor **184.**

The cell flow sensor **94** provides an output to resistor **186** indicative of a lack of flow in the cell **16.** The cell flow sensor output is connected in parallel to an indicator circuit comprising a transistor **204** and an L.E.D.

206 connected as illustrated to provide a no-flow indication.

A means must be provided for distinguishing the standby mode from a failure condition because in the standby mode the motor is not running. A persistent error signal will be generated by the r.p.m. sensor **100** as well as the cell flow sensor **94** in the standby mode. Hence, a fail override circuit **94** is interconnected between the standby circuit and the fail amplifier **188** as illustrated to cancel out the error signals. The standby override circuit **88** automatically cancels the disablement of the fail detection system when new film is fed into the processor.

When a persistent bonafide error is detected, the fail signal is sent to the shut-down circuit **84** directly as the output of the fail amplifier **188** (not via the diodes **208** and **210**) to shut off the motor and plating current without resetting the integrator **68.** The output of the shut-down circuit amplifier **166** (FIG. 7) is connected as illustrated via diode **210** to the junction of opposed diodes **208** and **212,** which form with diode **210,** an AND gate. In the absence of a fail signal, at the output of the amplifier **188,** the shut-down circuit signal, produced by the standby mode is shunted by the diode **208** because it is not reverse biased. When a fail signal is present, diode **208** becomes reversed biased and the shut-down signal, which in this case would be due to the failure mode, is routed via the diodes **212** to the transistor **214** to light up the L.E.D. **216** indicating failure. An audible alarm, connected as illustrated, can also be used to signal a failure.

In practice, all of the electronic circuitry in FIGS. **6, 7** and **8** as well as the integrated circuit voltage regulator **144** in FIG. **5** are provided together on a single printed circuit board of the plug-in type. The other electronic components including the remainder of the power supply and the variable current source would normally be provided separately on a heat sink.

Those skilled in the art will recognize that the implementation of the functional principles of the invention can be accomplished using all digital instead of analog circuitry. Many other modifications and adaptations of the circuitry disclosed are of course possible without departing from the principle of the invention. Thus, the above-described embodiment is intended to be illustrative and in no way restrictive regarding implementation of the system. The scope of the invention is indicated by the appended claims and all variations and adaptations which come within the range of equivalence thereof are intended to be embraced therein.

I claim:

1. A system for recovering silver from a chemical fixing solution in a photographic film processing system comprising an electrolytic cell having an anode and cathode adapted to be immersed in the chemical fixing solution of said film processing system, a variable current source operatively connected to the electrodes of said electrolytic cell to provide plating current therethrough, computing means to continuously compute the level of silver ions in said fixing solution from the amplitude of said plating current and the amount of film processed by the system and to generate an indication representing said level of said ions, said computing means changing the value of said indication in one direction in response to film being processed in said film processing system and changing the value of said indication in the opposite direction responsive to the amplitude of plating current flowing in said electrolytic cell the rate of change of said indication corresponding to said amplitude of plating current, and means to control said variable current source in accordance with said indication generated by said computing means to vary said plating current through a plurality of levels in accordance with the value of said indication.

2. A system as recited in claim **1,** wherein said means to control said variable current source causes said current source to vary said plating current proportionally to variations in said indication.

3. A system as recited in claim **1,** wherein said variable current source is variable throughout a continuous range of current values and said means to control said variable current source is operable to cause said variable current source to have any value in said continuous range depending upon the value of said indication.

4. A system as recited in claim **1,** wherein said variable current source, said computing means, and said means to control said variable current source comprise means to vary said plating current proportionally to the concentration of silver ions in said solution up to a maximum value and to maintain said plating current at said maximum value for silver concentrations greater than the concentration corresponding to said maximum value of plating current.

5. A system as recited in claim **1** including means to shut off said plating current applied by said variable current source to said electrodes in response to said indication reaching a predetermined value indicating that the silver ion concentration in said solution has dropped to a predetermined concentration.

6. The system of claim **1** further comprising standby means responsive to said output indication reaching a predetermined value representing a minimum level of ion concentration for automatically resetting said output indication to a value to represent zero ion concentration.

7. The system of claim **6,** further comprising a standby override circuit for disabling said standby means for a predetermined length of time upon the adding of new metal ions to the solution.

8. A system as recited in claim **1** wherein said computing means is an analog integrator having a charge storage device, the output voltage of said analog integrator depending upon the voltage across said charge storage device and comprising said output indication of said computing means, said analog integrator changing the charge on said charge storage device in one direction in proportion to the integral of said plating current and changing the charge on said charge storage device in the opposite direction at a constant rate whenever film is being processed by the fixing solution in said photographic cilm processing system.

9. A system as recited in claim **8** wherein said analog integrator further comprises an operational amplifier, said charge storage device being connected between the output and an input of said operational amplifier and means to apply signal proportional to said plating current to an input of said amplifier and to apply a signal with a constant amplitude to an input of said operational amplifier whenever film is being processed by the fixing solution in said photographic film processing system.

10. A system as recited in claim **1** wherein pump means are provided to continuously circulate fixing solution from said film processing system to said electrolytic cell.

11. A system as recited in claim 10 further comprising means responsive to the failure of said pump means to operate to interrupt said plating current.

12. A system as recited in claim 10 further comprising means to detect the flow of said fixing solution through said electrolytic cell and means responsive to said flow sensing means indicating a lack of flow of fixing solution to interrupt said plating current.

13. A system as recited in claim 1 further comprising means responsive to said plating current rising above a predetermined value to interrupt said plating current.

14. A system as recited in claim 10 further comprising means responsive to said plating current falling below a predetermined minimum value to interrupt said plating current.

15. An electrolytic plating system comprising an electrolytic cell having an anode and cathode adopted to be immersed in a chemical solution bearing metal ions, a variable current source connected to said cell to apply plating current therethrough, means producing a control signal indicative of the instantaneous concentration of metal ions in said solution up to a predetermined concentration of metal ions and to hold the value of said control signal constant for ion concentrations greater than said predetermined concentration, and means responsive to said control signal for continuously controlling said current source to apply said plating current with an amplitude related to the value of said control signal.

16. An electrolytic plating system comprising an electrolytic cell having an anode and a cathode adapted to be immersed in a chemical solution bearing metal ions, a variable current source connected to said cell to apply plating current therethrough, computing means to continuously compute the integral of the rate said ions are added to said solution minus the rate said metal ions are plated out of said solution, said integral representing the metal ion concentration in said solution, means responsive to said integral for controlling said variable current source to apply said plating current with an amplitude related to said integral, and standby means responsive to the value of said integral falling below a predetermined minimum level for automatically resetting said integral to a value to represent zero ion concentration in said chemical solution.

17. The system of claim 16, further comprising a standby override circuit for disabling said standby means for a predetermined length of time upon the adding of new metal ions to the solution.

18. A system for recovering silver from a chemical fixing solution in a photographic film processing system comprising an electrolytic cell including an anode and a cathode, means to circulate the chemical fixing solution from said photographic film processing system continuously through said electrolytic cell, a variable current source operatively connected to the electrodes of said electrolytic cell to provide plating current therethrough, signalling means to indicate when film is being processed by said film processing system to add silver ions to the fixing solution of said film processing system, plating current detection means to detect said plating current amplitude and to generate a signal representing the amplitude of said plating current, integrating means to continuously compute the level of silver ions in said fixing solution and generate a control signal representing the level of concentration of silver ions in said fixing solution by integrating a constant value to change said control signal in one direction in response to said signalling means indicating that film is being processed by said film processor and by integrating the value of the output signal of said plating current detection means to change the value of said control signal in the opposite direction, and means responsive to the value of said control signal to control said variable current source to apply a plating current to said electrodes having a value related to the value of said control signal.

* * * * *