United States Patent [19]

Carter

[11] **3,806,114**

[45] **Apr. 23, 1974**

[54] **PNEUMATIC PICKER**

[75] Inventor: **Sidney T. Carter,** Shrewsbury, Mass.

[73] Assignee: **A-T-O, Inc.,** Cleveland, Ohio

[22] Filed: **Nov. 20, 1972**

[21] Appl. No.: **308,280**

[52] **U.S. Cl.** **271/20,** 271/21, 271/98, 271/146, 271/149

[51] **Int. Cl.** **B65h 3/10**

[58] **Field of Search** ..... 271/20, 21–25, 271/19, 30 A, 106, 94, 98, 99, 100, 149, 148, 146

[56] **References Cited**

UNITED STATES PATENTS

1,248,946	12/1917	Story	271/23
3,276,425	10/1966	Rabb	271/74 X
3,041,067	6/1962	Fux et al.	271/96
2,595,546	5/1952	Sampson	271/97
3,240,488	3/1966	Lyman	271/30 A
3,127,168	3/1964	Kramer	271/96
3,586,316	6/1971	Ehlscheid et al.	271/98
2,631,037	3/1953	Lake et al.	271/149
2,529,730	11/1950	Henares et al.	271/148
3,089,697	5/1963	Brozo	271/146

Primary Examiner—Evon C. Blunk
Assistant Examiner—Bruce H. Stoner, Jr.
Attorney, Agent, or Firm—Dike, Bronstein, Roberts & Cushman

[57] **ABSTRACT**

The combination with a magazine for holding a stack of labels, of a vacuum picker arranged to take hold of an end portion of the endmost label and present it to the nip between a pair of tangentially engaged rotating members which are adapted to withdraw the label from the stack and while the latter are withdrawing the label presented thereto to pick the succeeding label preparatory to presenting it to the rotating members so that while one label is being pulled out of the magazine the next label is being picked. One of the rotating members may be a turret having peripherally spaced pads adapted in cooperation with the other member to take hold of successive labels presented thereto by the picker and transfer the labels one at a time successively to a position for receiving an application of adhesive and thereafter to a position for application to a container. The label is held against lateral movement in its own plane during picking of the end portion from the stack and presentation to said rotating members to provide for predetermined registration with the one rotating member and air jets are arranged to impinge upon the top and sides of the stack adjacent the endmost label to initiate separation of the endmost label for picking.

22 Claims, 20 Drawing Figures

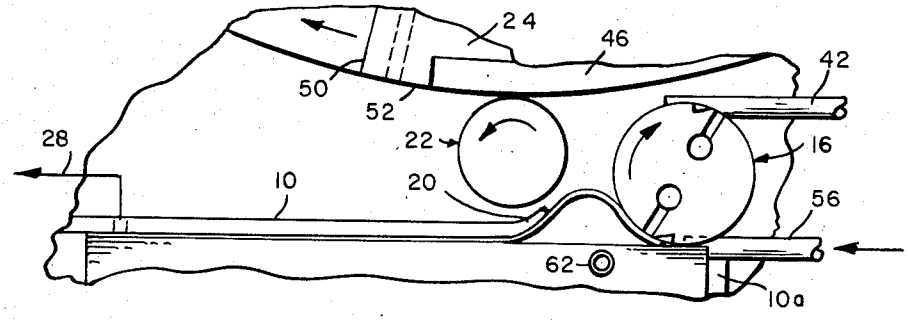

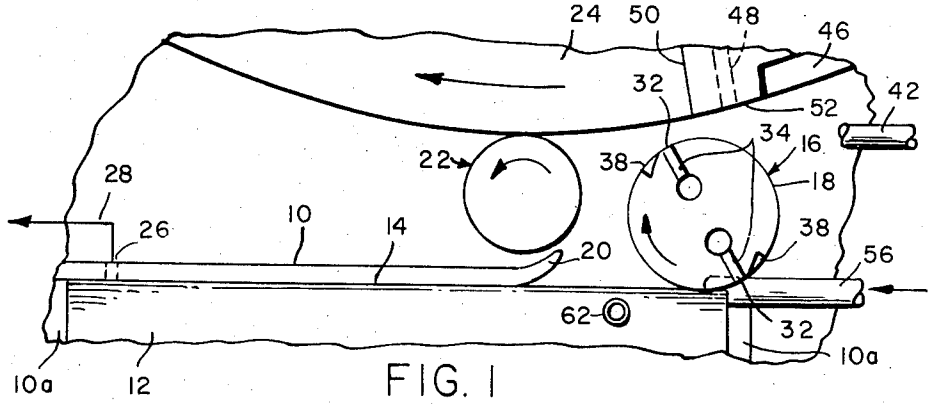

FIG. 1

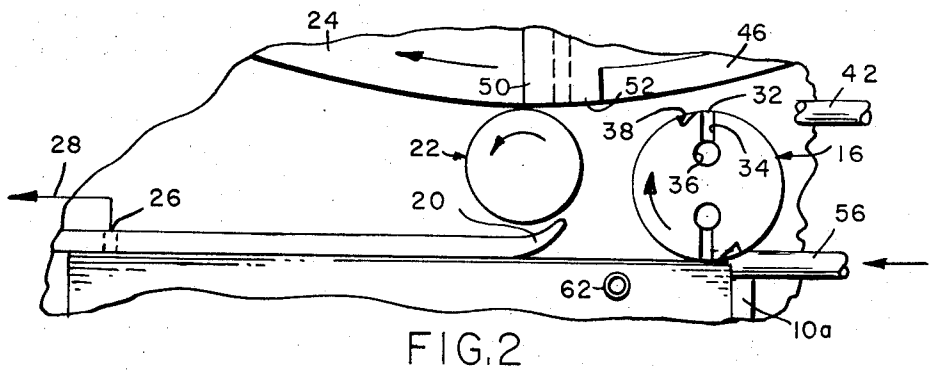

FIG.2

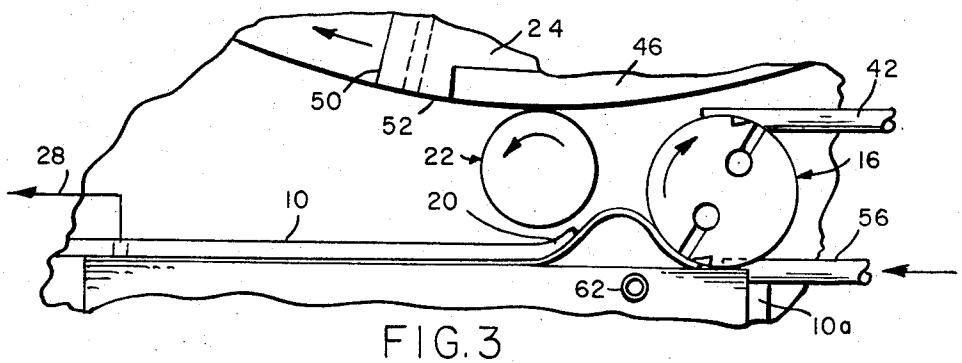

FIG.3

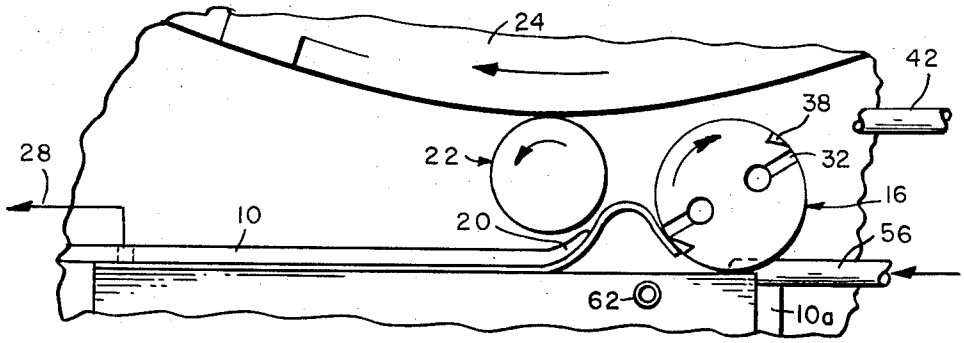

FIG.4

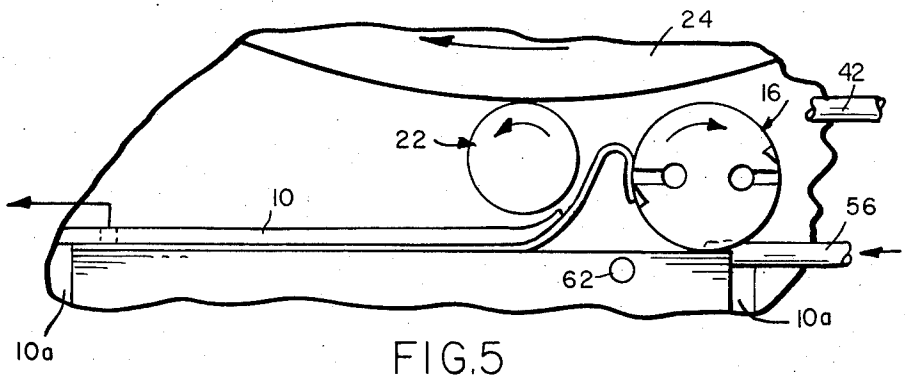

FIG.5

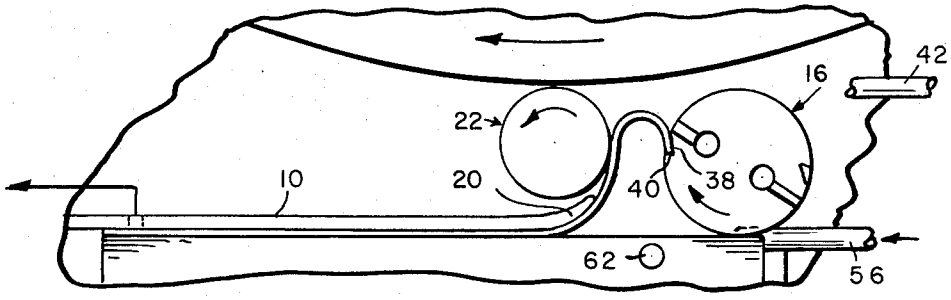

FIG.6

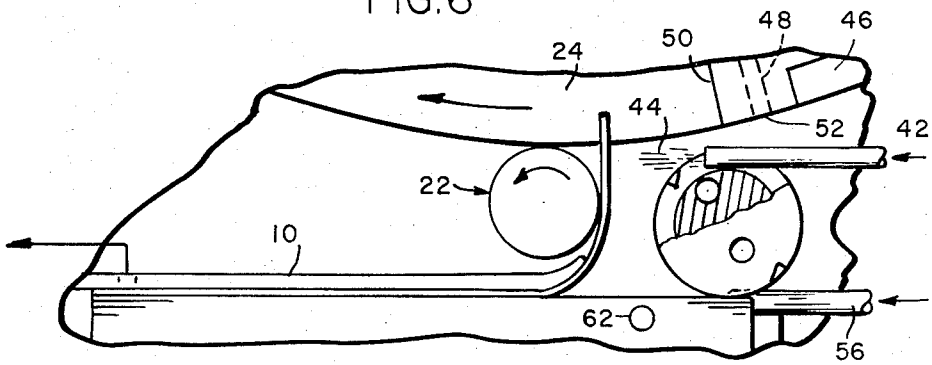

FIG.7

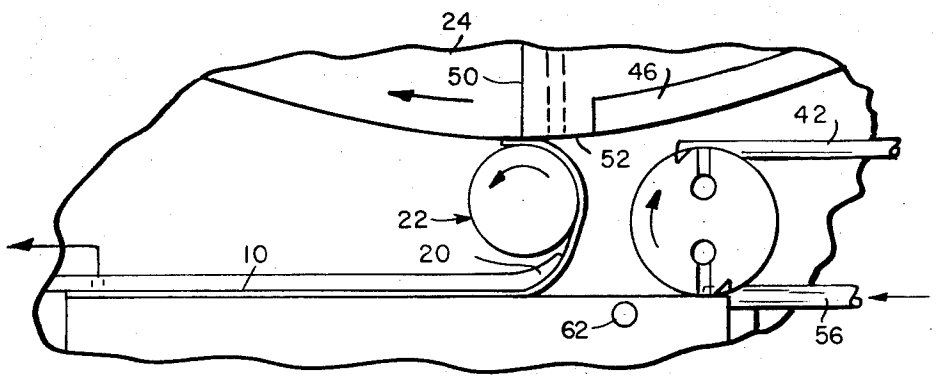

FIG.8

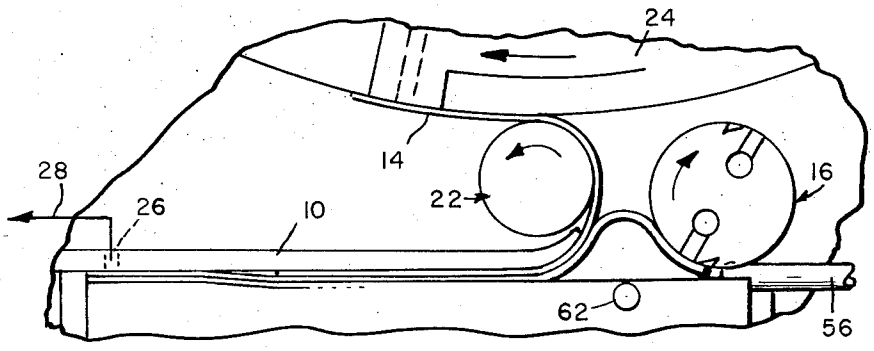

FIG.9

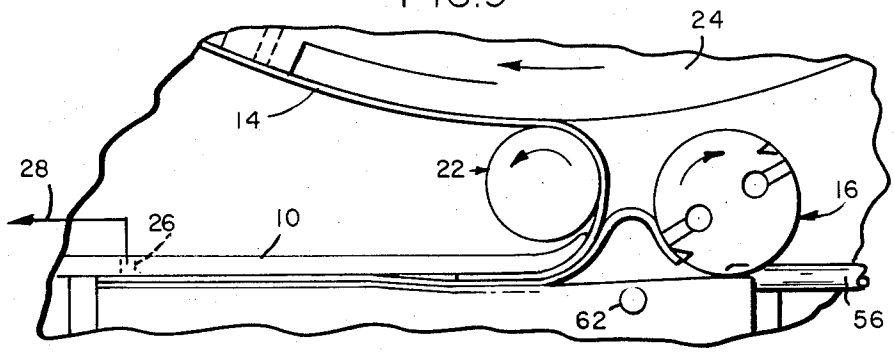

FIG.10

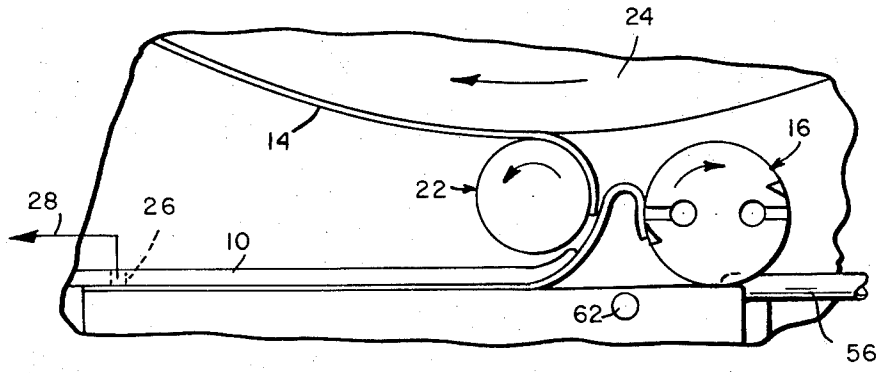

FIG.11

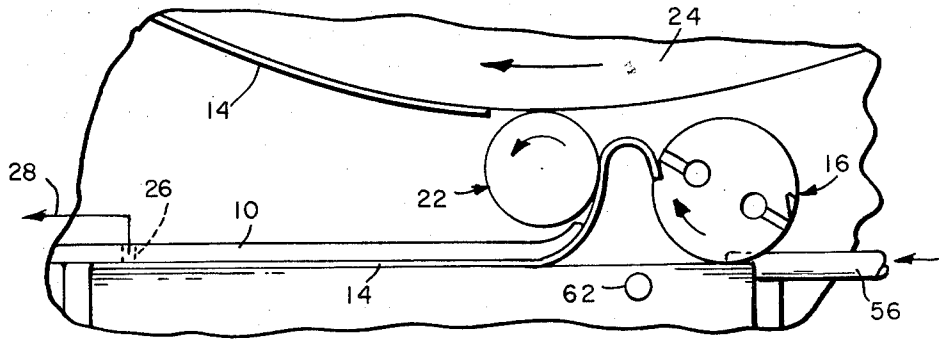

FIG.12

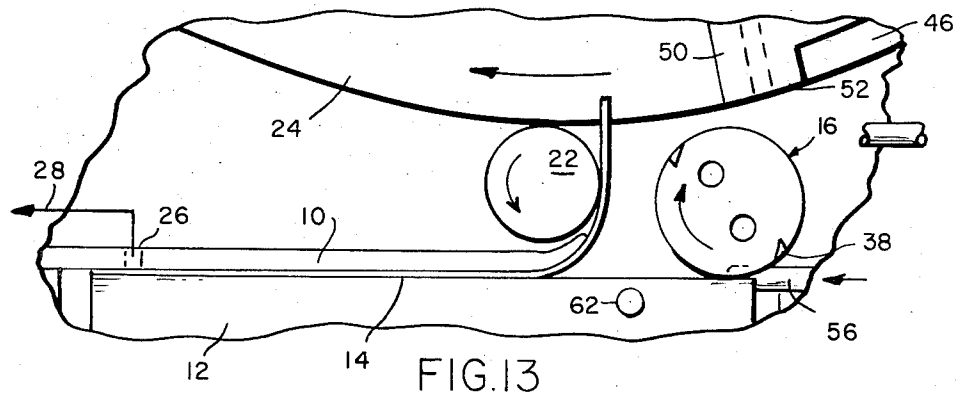

FIG.13

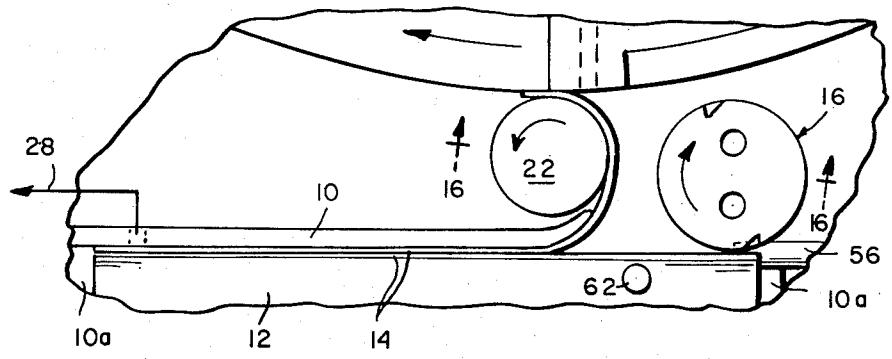

FIG.14

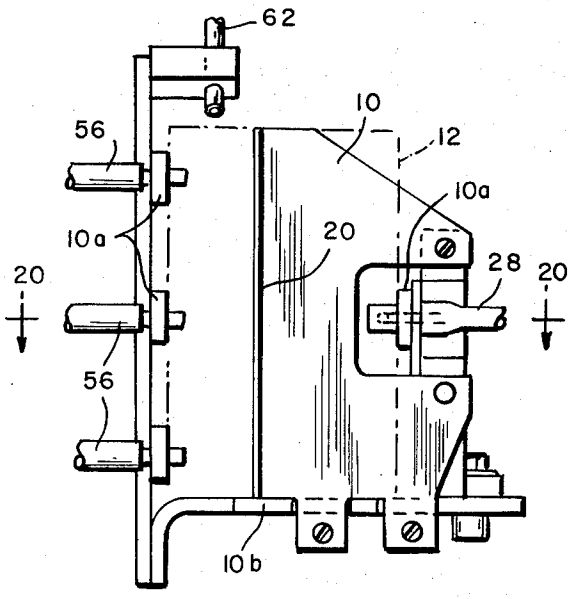

FIG.15

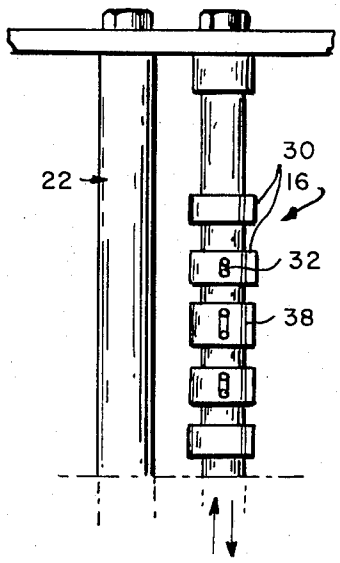

FIG.16

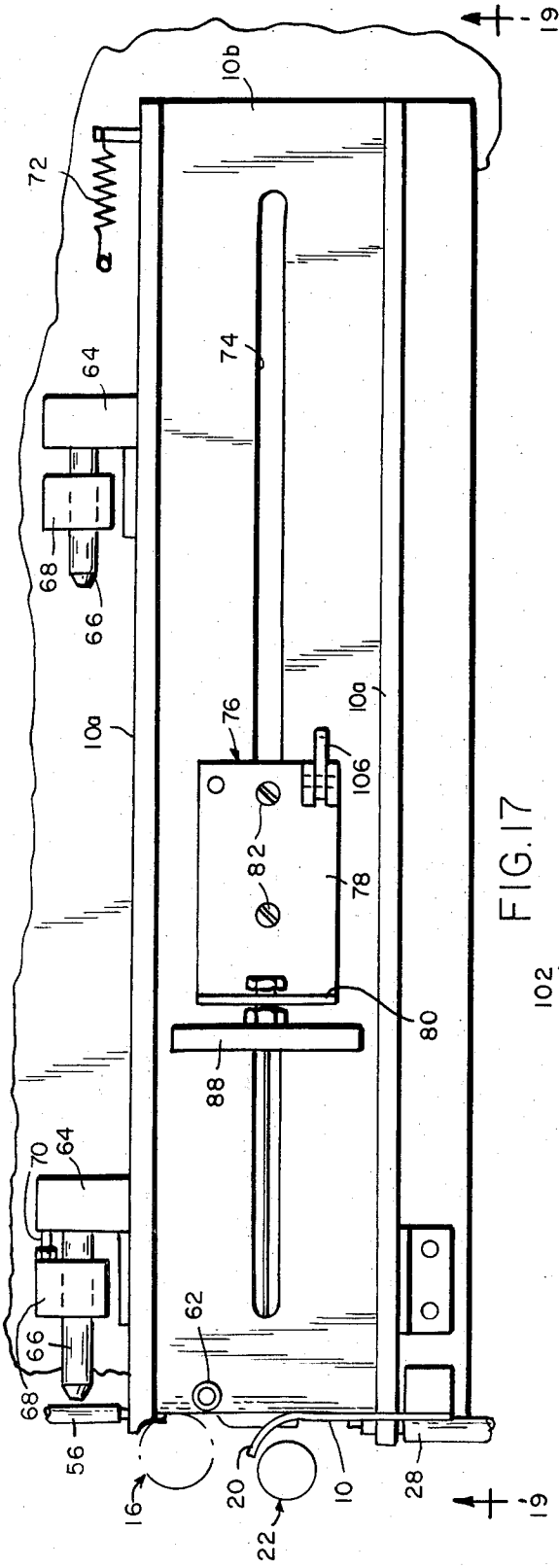
19
10b
72
74
64
68
66
10a
76
106
82
78
80
88
70
62
56
16
20
22
10
28
19

FIG.17

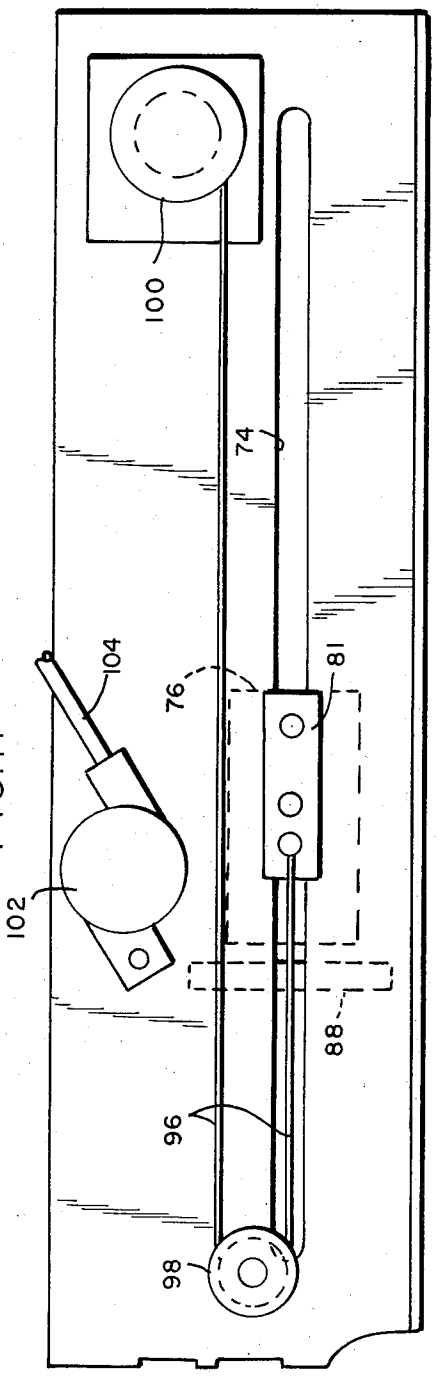
100
74
104
76
81
102
88
96
98

FIG.18

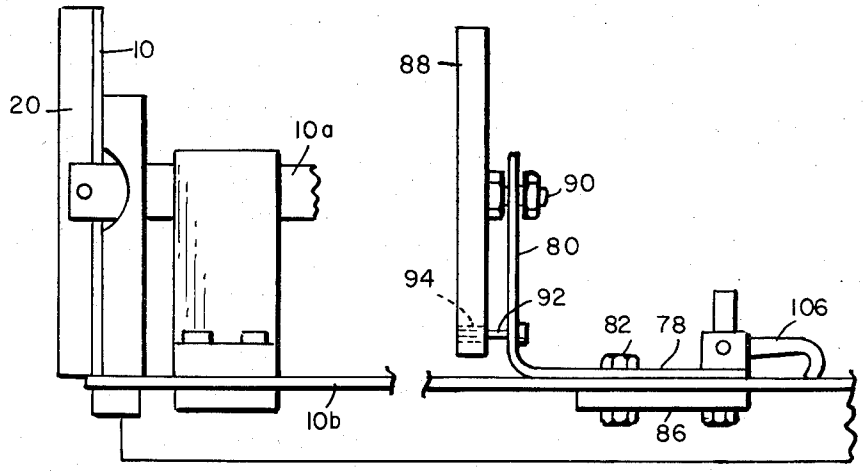
10
20
10a
88
90
80
94
92
82
78
106
10b
86

FIG.19

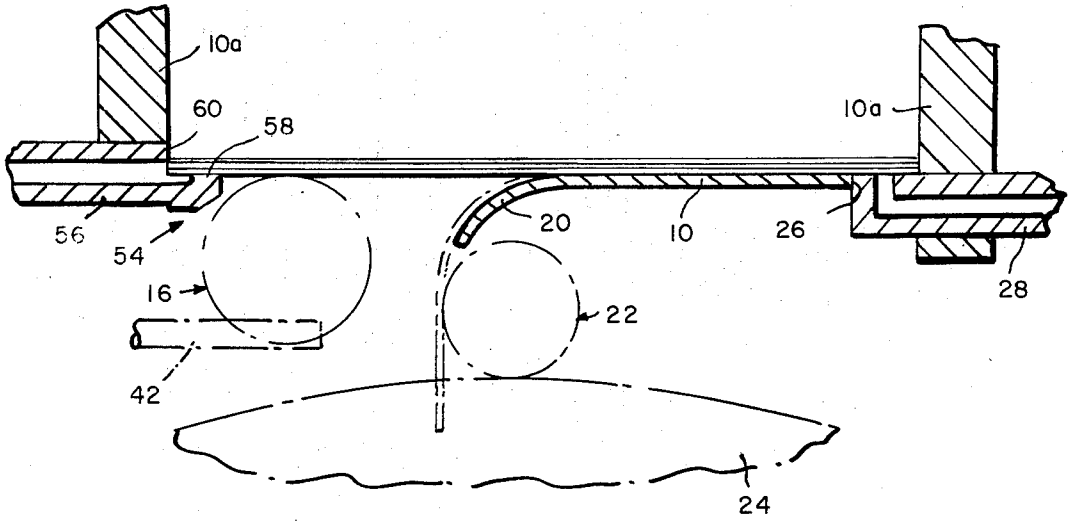
10a
60
58
10a
56
54
20
10
26
28
16
22
42
24

FIG. 20

PNEUMATIC PICKER

BACKGROUND OF THE INVENTION

Apparatus for picking labels one at a time from the end of a stack of labels is well-known in the art particularly for use in conjunction with automatic labeling machines, for example, as shown in U.S. Pat. Nos. 3,572,691 and 3,654,024. In the apparatus shown in the aforesaid patents a rotary picker is employed to periodically move a resiliently displaceable finger into engagement with the endmost sheet of the stack and by frictional engagement therewith to disengage an end portion of the sheet from the stack, roll it outwardly and release it to a second roller which, in cooperation with the rotary picker, grips the sheet and pulls it from the magazine. At high speeds apparatus of this kind is not dependable because the tractive surface of the finger wears smooth quickly, requiring frequent renewal; because the finger tends to displace the label in its own plane during picking of the end portion and delivery to the second roller so that registration of the label in a succeeding operation cannot accurately be determined; and because the atmospheric conditions can affect the time it takes for the bent labels to receover to their straightened position and hence the rate that the apparatus can be operated. Additional difficulties have been experienced in separating cut labels due to the tendency of the edges of the labels to curl and cling to each other. This invention has for its purpose to alleviate the aforesaid conditions to make high speed picking possible without danger of displacement of the labels during the picking operation and until they are ready to be withdrawn; to provide a structure in which there are no parts to become worn and require replacement; to provide an apparatus in which it is not subject to ambient conditions and to provide an apparatus which will be effective in spite of the tendency for the labels in the stack to cling to each other either by the natural tendency for the sheets to adhere through surface contact with each other or by reason of curling at the edges.

SUMMARY

As herein illustrated, the invention resides in the combination with a magazine adapted to hold a stack of sheets of resilient paper, a picker assembly for removing the sheets from the stack one at a time, said magazine embodying means at one end for confining the stack, and means at the other end for applying pressure to hold the one end of the stack against the confining means, said one end of the magazine containing an opening, one side of which coincides with the ends of the sheets at one side of the stack through which the endmost sheet is accessible for removal a rotary picker supported at said one side of the opening, said picker being arranged to travel in a circular path tangent to the plane of the opening in a direction toward the other side of the opening and at the position of tangency therewith being adapted to grip the end of the sheet at the one side, a stationary guide at the other side of the opening extending away from the plane of the opening and in spaced confronting relation to the path along which the picker travels, said picker being operable as it moves along said path from the place of tangency where it takes hold of the sheet toward the guide to lift the portion between it and the guide from the stack and push it laterally against said guide to cause said portion to be bent outwardly from between the guide and picker to substantially U-shape, and as it moves along said path away from the guide to release the end thus permitting it to straighten, a jet arranged adjacent the place of release to eject a stream of air against the concave side of the unbending portion of the sheet to be straightened, and feed means situated in a position to take hold of the free end of the straightened sheet and withdraw that portion of the sheet still confined in the magazine through said opening. There is means at the one end of the magazine for frictionally resisting lateral movement of the endmost sheet in its own plane comprising an orifice at said end in communication with the outwardly facing side of the endmost sheet connected by a conduit to a vacuum pump or other source of low pressure. There are means at the one side and top of the magazine for initiating separation of the endmost sheet from the stack in the form of nozzles arranged to eject streams of air against the side and top adjacent the endmost sheet. The picker is a rotor embodying surfaces containing orifices which are rotatable in tangential engagement with the opening at the end of the magazine in the plane of the endmost sheet which are at times adapted to be connected to a vacuum pump and at other times to a pressure pump to effect picking of the end portion of the sheet at the point of tangency and releasing it approximately 90° of rotation therefrom. There is means in said surfaces at the rear side of the orifices with respect to the direction of rotation for engaging the edge of the sheet when released from the picker which, by engagement therewith, unrolls the end. A counter-rotating guide is supported in confronting relation to the picker which has a surface which extends beyond the stationary guide against which the straightened sheet is impelled by the air jet and a counter-rotating member travelling in a circular path tangent to the counter-rotating guide roll is operable by engagement with the straightened sheet to engage it with the counter-rotating guide roll and by such engagement to withdraw the sheet from the magazine. The counter-rotating member may be a turret on which there are mounted peripherally spaced pads adapted to take hold of and transfer successive labels to positions for receiving adhesive and thereafter to positions for application to containers.

The invention will now be described in greater detail with reference to the accompanying drawings wherein:

FIGS. **1** to **14**, inclusive, are plan views of the picker mechanism diagrammatically illustrating the removal of successive sheets from the magazine;

FIG. **15** is a front view in elevation of the magazine;

FIG. **16** is an elevation taken on the line **16—16** of FIG. **14** showing the picker and guide roll;

FIG. **17** is a top view of the magazine showing diagrammatically the picker and guide roll at the forward end;

FIG. **18** is a bottom view of the magazine;

FIG. **19** is an elevation taken on the line **19—19** of FIG. **17**; and

FIG. **20** is a section taken on the line **20—20** of FIG. **15.**

Referring to FIGS. **1** to **14**, inclusive, there is shown the forward end member **10** of a magazine against which a stack **12** of sheets of thin material, specifically labels, are yieldably held, as will be described hereinaf-

ter, with a portion of the endmost label **14** in engagement with the end member **10** and a portion exposed; a picker **16** supported adjacent one side of the magazine with its surface **18** in tangential relation to the exposed portion of the endmost label; a fixed guide **20** spaced from the right side of the magazine and defining therewith an opening through which the end portion of the label **14** is exposed; a counter-rotating guide roll **22** and a counter-rotating member **24** which have tangential engagement and which operate, as will be described hereinafter with reference to FIGS. **6** to **11**, to withdraw a label from the magazine.

The stack **12** of labels is confined between the side members **10***a*—**10***a* of the magazine and is urged forwardly against the end member **10** as successive labels are withdrawn so that there is frictional engagement between the endmost label and the end member **10** which tends to resist movement of the endmost label in its own plane. To augment such resistance to movement of the label in its own plane while the exposed portion is being picked and presented to the members **22** and **24** for withdrawing the label from the magazine, the end member **10** is provided with an opening **26** which is in communication with the interior of the magazine and hence with the outwardly facing side of the endmost label **14.** A vacuum conductor tube represented by the line **28** is connected to this opening to hold the endmost label firmly against the end member **10** so that even the pull exerted thereon by the picker will not displace it in its own plane thus making it possible to insure a predetermined registration of the label with the members **22** and **24.**

As previously stated the opening through which the end portion of the label is exposed is defined at one side by one side **10***a* (the right side) of the magazine and at its other side (the left side) by the fixed guide **20** which, as herein shown, is an outwardly curved portion of the end member **10,** — this curved portion being spaced from the picker and extending outwardly from the plane of the opening.

The picker **16** is a rotor which is supported for rotation about an axis parallel to the plane of the opening and has lengthwise thereof, as shown in FIG. **16,** a plurality of spaced circular discs **30,** each of which has diametrically disposed orifices **32**—**32** connected by radial passages **34**—**34** and by vacuum passages **36**—**36** extending lengthwise of the rotor which are suitably connected to a vacuum pump or other source of vacuum. Behind each of the orifices **32** with respect to the direction of rotation the surfaces of the discs contain notches **38.**

In the normal picking operation commencing with FIG. **1** with the picker rotating in a clockwise direction, a vacuum is applied to the orifices **32** through the vacuum passages **36** just before the orifices reach the corner of the stack so that when they move into tangential engagement with the endmost label, as shown in FIG. **2,** there will be a sufficient vacuum at the orifices to take firm hold of the endmost sheet. Continued rotation of the picker with the label firmly held to the surfaces of the discs by the vacuum orifices displaces the exposed portion of the label toward the left in its own plane and outwardly away from the plane of the opening against the outwardly curved fixed guide **20,** as shown in FIG. **3,** — that portion of the label in the magazine engaged with the end member **10** being held against displacement in its own plane by its frictional engagement with the end member and by the vacuum applied through the opening **26.** The notches **38** are located at a distance behind the orifices such that when the end of the label is held by the orifices the edge of the label overlies the notches as shown in FIG. **4.** During the movement of the picker toward the fixed guide the picked portion of the label is bent outwardly and folded upon itself substantially U-shaped, the bend being most acuate at the position shown in FIG. **5** where the orifices have travelled approximately 90° from their initial place of initial tangential engagement with the label as shown in FIG. **1.** As the picker continues to rotate the orifices begin to move away from the fixed quide and at this pOint the vacuum is discontinued and air under a low pressure is delivered through the orifices to disengage the label from the picker. Release of the label from the orifices allows the trailing edge **40** of the label which is still under stress to snap into the notch **38** and these now by continued rotation of the picker commence to unroll the bent portion of the label and to release it as they move away from the guide **20.** Release of the end of the label permits it to straighten due to its own resilience. However, to augment this straightening and to position it substantially at right angles to the plane of the opening in the magazine and in tangential engagement with the guide roll **22** there are provided nozzles **42** which are located between the discs **30** which direct jets of air **44** against the unfolding concave side of the label, as shown in FIG. **7.** As herein shown the endmost portion of the label extends outwardly beyond the guide roll **22.** The members **22** and **24** have tangential engagement and are counter-rotating so that introduction of the end of the straightened label into the nip between the members will move the label in a direction to withdraw that portion still in the magazine therefrom. The member **24** may be simply a feed member; however, as herein shown, it is a turret designed to take the labels when they are completely withdrawn from the magazine to a station for application of adhesive thereto and from thence to a station for applying the adhesive-coated label to containers and has peripherally thereof and in spaced relation pads **46** against which the labels are adapted to be held by means of orifices **48** which are adapted at times to be connected to a vacuum. The pads are spaced angularly with reference to each other and the leading side **50** of each pad is substantially radial with respect to the center of rotation of the turret so that as it moves into contact with the label, as shown in FIG. **7,** the bending force applied to the extending end of the label will be perpendicular to the surface thereof and will bend it reversely over the surface of the guide roll **22** without displacing it downwardly or away from the surface of the guide roll **22.** Thus it is possible to maintain a predetermined registration of the labels with the pads on the turret. Following engagement of the radial surface **50** of the pad with the label the peripheral surface **52** adjacent thereto, which contains the orifices **48,** grips the label between it and the guide roll **22** and commences to move the label in a direction to withdraw it from the magazine. It is to be observed (FIG. **8**) that at this moment the orifices **32** diametrically opposite have now moved into tangential engagement with the succeeding label and the latter, as shown in FIG. **9,** has been displaced toward the fixed guide and outwardly between the portion of the label that is being withdrawn and the surface of the picker.

This provides for rapid picking of labels from the magazine and it is for this reason that it is desirable to employ the vacuum opening **26** to apply vacuum to the next label to prevent it from being frictionally dragged in its own plane by the trailing end of the preceding label. The trailing end of the preceding label is completely withdrawn at about the time the succeeding label reaches the position of maximum folding, as shown in FIG. **11**, where the orifices holding the end of this label have moved through an angle 90° from their point of tangency with the label toward the fixed guide and are about to commence movement away from the fixed guide. Thus while one label is being withdrawn another is being picked for withdrawal. The picker **16** is rotated in a clockwise direction, the guide roll **22** in a counterclockwise direction and the turret **24** in a clockwise direction as viewed in FIGS. **1** to **14**, inclusive. The guide roll **22** and turret **24** are driven at speeds such that the surface speed of the guide roll **22** and the surface speed of the turret **24** are exactly the same.

To insure picking of the endmost label at high speed it is desirable to initiate separation of the endmost label from the stack so that when the orifices of the picker move into tangential engagement with the label the latter will not resist picking, that is, separation from the next label in the stack. To this end there are mounted on the side member **10***a*, at the left side of the magazine, as shown in FIGS. **15** and **20**, nozzles **54**, — there being three such nozzles shown spaced longitudinally of the side of the stack at the front corner. Each nozzle **54** compresses a tube **56**, from the end of which is removed a half section so that it has right-angularly disposed surfaces **58** and **60** (FIG. **20**) which are adapted to engage, respectively, the outwardly facing surface of the endmost label and the side of the stack at the corner. As thus constructed, air delivered through the tube **56** to the nozzle is delivered to the forwardly facing surface of the endmost label and to the edges of the label at that side of the stack. By thus delivering the air to the stack the endmost label is separated from the adjacent label without causing the label to bow outwardly as it might be if the air were delivered solely against the edge. In addition to effecting this initial separation of the endmost label from the stack along the longitudinal edges separation between the label is augmented by an additional nozzle **62** mounted at the upper edges of the labels in a position to direct a stream of air downwardly against the top of the stack close to the endmost label which, as shown in FIGS. **1** to **14**, is located between the point of tangency of the picker with the endmost label and the fixed guide **20**.

The magazine from which the labels are picked and which was briefly referred to above comprises, as shown in FIGS. **15**, **17**, **18** and **19**, a substantially rectangular structure comprising the flat end member **10**, spaced parallel side members **10***a*—**10***a* and a bottom member **10***b*. One wall **10***a* (FIG. **17**) has secured to it longitudinally spaced mounting blocks **64**—**64** and mounting pins **66**—**66**, the axes of which are perpendicular to the end opening in the magazine by means of which the magazine is mounted in bracket members **68**—**68** forming part of the machine frame. The forward block **64** has fixed to it an adjusting screw **70** which, by engagement with the bracket **68**, determines the forward position of the open end of the magazine with respect to the picker and hence the tangency of the picker with the endmost sheet and is yieldably held in its forward position by a spring **72** connected at one end to the magazine and at the other end to the frame of the machine. The pins **66**—**66** permit tilting the magazine about a horizontal axis. A longitudinally extending slot **74** is formed in the bottom wall **10***b* of the magazine and has slidably mounted on the bottom in said slot a bracket member **76** which comprises a horizontal plate **78** and a vertical plate **80**. The horizontal plate **78** is fastened to the bottom wall for sliding thereon by bolts **82** which extend through it, through the slot **74** and into a block **81** at the underside of the bottom. A vertically disposed pusher plate **88** is mounted on the forward side of the plate **80**, the plate being adapted to engage the rear end of the stack of labels. To accommodate for irregularities in the stack the pusher plate **88** is mounted for limited rotation and rocking movement on a stud **90** loosely fastened to the bracket plate **80**, rotation being limited by a pin **92** extending from the plate **80** through an arcuate slot **94** in the plate. A cable **96** fixed at one end to the block **86** (FIG. **18**), extending about a pulley **98** at the underside of the bottom wall and from thence to a housing **100**, also at the underside of the bottom wall wherein it is wound on a spool, provides for applying a constant pressure to the pusher plate **88**. A "Negator" such as may be purchased from Ametek Inc., of Hatfield, Pennsylvania, may be used for this purpose.

A hook **106** pivotally connected to the bracket plate **78** provides by its engagement with the rear end with the bottom wall means for holding the pusher plate retracted during loading of the magazine with labels.

There is also mounted on the underside of the bottom wall a pneumatically operated vibrator **102** provided with a conductor **104** by means of which it may be connected to a source of air pressure for vibrating the magazine during operation. This assists in promoting movement of the stack as a whole toward the forward end of the magazine as labels are removed from the open end and also for separation of the labels one from another. A suitable vibrator for this purpose called a "Ball Vibrator" may be purchased from Martin Engineering Co., of Neponset, Ill.

It should be understood that the present disclosure is for the purpose of illustration only and that this invention includes all modifications and equivalents falling within the scope of the appended claims.

I claim:

1. The combination with a magazine for supporting a stack of thin sheets of resilient material, said magazine embodying means at one end for confining the stack at that end and means at the other end for urging the stack toward said one end, said one end containing an opening, one end of which coincides with one side of the magazine, a stationary guide intermediate the sides of the magazine defining the other end of the opening, a pneumatic picker comprising a rotor rotatable about an axis parallel to the plane of the opening, said rotor containing longitudinally spaced orifices which travel in a circular path tangent to the plane of the opening and which are connected at times of tangency with the sheet with a vacuum source so as to take hold of the sheet, said stationary guide having an arcuate guide surface extending away from the plane of the opening in confronting relation to and spaced from the circular path along which the orifices move, said picker operating as it moves from the place of tangency with

the sheet toward the fixed guide to lift said end and move it toward the guide so as to bend it outwardly between the guide and picker to substantially U-shape, said orifices being disconnected when they begin to move away from the guide along said path to release said end so that it straightens between the guide and picker, means adjacent the orifices rearwardly with respect to the direction of rotation of the picker to receive the released end of the sheet t continue to move it away from the magazine, a to arranged adjacent the place of release to eject a stream of air against the concave side of the unbending end as it straightens, and feed means situated in a position to take hold of the free end of the straightened sheet and move it in a direction to withdraw the remainder of the sheet from the magazine.

2. A combination according to claim **1**, wherein the means at the one end for confining the endmost sheet frictionally engages the surface of the sheet throughout its length except for the portion thereof exposed at said opening.

3. A combination according to claim **1**, wherein the picker has diametrically located vacuum orifices such that the picker will pick a sheet for each half revolution.

4. A combination according to claim **1**, wherein the orifices are disconnected from said source of vacuum substantially 90° from their place of tangency.

5. A combination according to claim **1**, wherein the orifices are disconnected from said source of vacuum substantially 90° from their place of tangency and concomitantly connected to a source of air pressure.

6. A combination according to claim **1**, wherein said means adjacent the orifices are notches embodied in the surface of the picker.

7. A combination according to claim **1**, wherein there is a counter-rotating guide roll, the surface of which extends beyond the stationary guide in confronting relation to the picker against which the straightened sheet is impelled by the air jet with a portion thereof extending beyond its point of tangency with the surface, and a counter-rotating member travelling in a circular path tangent to said counter-rotating guide roll at an arcuate distance from the point of tangency of the sheet therewith, said member having a radial surface adapted to intercept and bend the straightened sheet into engagement with the surface of the counter-rotating guide roll and a peripheral surface engageable with the surface of the counter-rotating guide roll for advancing the sheet.

8. A combination according to claim **7**, wherein the peripheral surface of said counter-rotating member contains vacuum orifices.

9. A combination according to claim **1**, wherein the means at the other end of the magazine is a follower slidably mounted therein and there is means for yieldably urging the follower in a direction to press the stack toward the one end.

10. A combination according to claim **9**, wherein the follower comprises a bracket member mounted to the bottom side of the magazine for sliding therealong and a flat plate mounted thereon substantially parallel to the end of the magazine.

11. A combination according to claim **10**, wherein the plate is mounted on said bracket for limited tilting and rotary movement thereon.

12. A combination according to claim **10**, wherein there is a latch member mounted on the bracket by means of which the follower may be latched in a retracted position.

13. A combination according to claim **9**, wherein there is a vibrator mounted to the bottom side of the magazine.

14. A combination according to claim **1**, wherein the feed means comprises counter-rotating members having arcuate surfaces travelling at the same rate and in confronting relation such as to advance a sheet introduced to the bite between said surfaces in a direction to withdraw the sheet from the magazine, and one of said rotating members containing an opening for receiving the released end of the sheet and moving it into the bite between said counter-rotating arcuate surfaces.

15. A combination according to claim **1**, wherein there are air jets supported at the one side of the magazine spaced longitudinally of the sheets adjacent the place of tangency of the picker with the endmost sheet, said jets comprising conductors terminating in discharge passages having right-angularly disposed openings parallel to the plane of the endmost sheet and perpendicular thereto through which streams of air are led to the exposed surface of the endmost sheet and the end edge thereof.

16. A combination according to claim **1**, wherein there is vacuum means at the end of the magazine containing the opening in communication with the endmost sheet for resisting lateral movement thereof in its own plane.

17. The combination with a magazine for supporting a stack of thin sheets of resilient material, said magazine having at one end an opening through which the sheets may be withdrawn one by one, said opening being shorter in length than the length of the sheet in the direction of withdrawal, such that a portion of the endmost sheet is confined and another portion is exposed, a stationary guide at one end of the opening, a rotor supported at the other end of the opening for rotation about an axis parallel to the plane of the opening, said rotor having a cylindrical surface which is tangent to the opening and contains at peripherally spaced intervals longitudinally spaced orifices, means for rotating the rotor in a direction to cause the orifices to travel along a path toward the guide and then away from the guide, means connecting the orifices to a vacuum at the place of tangency with the sheet exposed in the opening to take hold of the sheet and displace it toward the guide to bend the sheet outwardly from the plane of the opening between the guide and rotor, means for disconnecting the orifices from the vacuum as they begin to move along said path away from the guide to release the sheet from the orifices while still bent between the guide and rotor, and means on the surface of the rotor operable by engagement with the end edge of the bent sheet as the rotor continues to rotate to unfold the bent end.

18. The combination with a magazine for holding a stack of labels, a rotor supported at one end of the stack for rotation about an axis parallel to the plane of the endmost label, said rotor having a cylindrical surface which is tangent to the surface of the label at said one end, said surface containing orifices, means for rotating the rotor to move the orifices into tangential engagement with said endmost label, means for connect-

ing the orifices at times to a vacuum so that at the place of tangency they grip the endmost sheet and displace it toward the other end of the sheet, a guide member supported intermediate the ends of the stack in the plane of tangency in engagement with the endmost sheet, said guide member having a part extending away from the endmost sheet in confronting relation to the confronting surface of the rotor with a gap between the two such that as the rotor rotates the orifices move toward the guide member and then away from the guide member and such that rotation of the rotor folds the sheet outwardly from the end of the stack into the gap between the guide member during its movement toward the guide member and allows the sheet to unfold as it moves away from the guide member, said sheet being held both by vacuum and by frictional engagement with the surface of the rotor as it is rolled outwardly from the end of the stack, and means for disconnecting the orifices from the vacuum when they commence to move away from the guide member.

19. The method of picking sheets comprising supporting a stack of sheets with the stack at one end confined against displacement perpendicular to the surface of the endmost sheet, leaving a portion of the endmost sheet exposed, vacuum holding the confined portion of the sheet against lateral movement in its own plane, vacuum picking the exposed portion of the endmost sheet from the stack and folding it outwardly on itself away from the end of the stack to impart a bending stress to the sheet such that when it is released it will tend to straighten itself, releasing said folded end from the vacuum, applying a force to the end edge of said released end following release to initiate straightening of the folded end, directing a jet of air against the concave side of the straightened sheet as it straightens to move it to a predetermined position substantially perpendicular to the plane of the endmost sheet in the stack, and gripping the end of said sheet at said predetermined position and moving it in a direction to withdraw the remainder of the sheet laterally from the stack.

20. A method according to claim **19,** comprising vacuum holding the confined portion of the sheet against lateral movement in the plane of the stack while bending the sheet upon itself.

21. A method according to claim **19,** comprising delivering jets of air to an edge and end of the endmost sheet in the plane thereof to effect initial separation of the stack.

22. A method according to claim **19,** comprising delivering jets of air to the exposed surface of the endmost sheet and to the side of the stack adjacent thereto to initiate separation of the endmost sheet.

* * * * *