Jan. 16, 1940. L. H. KIRKPATRICK 2,187,037

WELL TOOL OR THE LIKE

Filed June 9, 1939 2 Sheets-Sheet 1

Fig. 1.

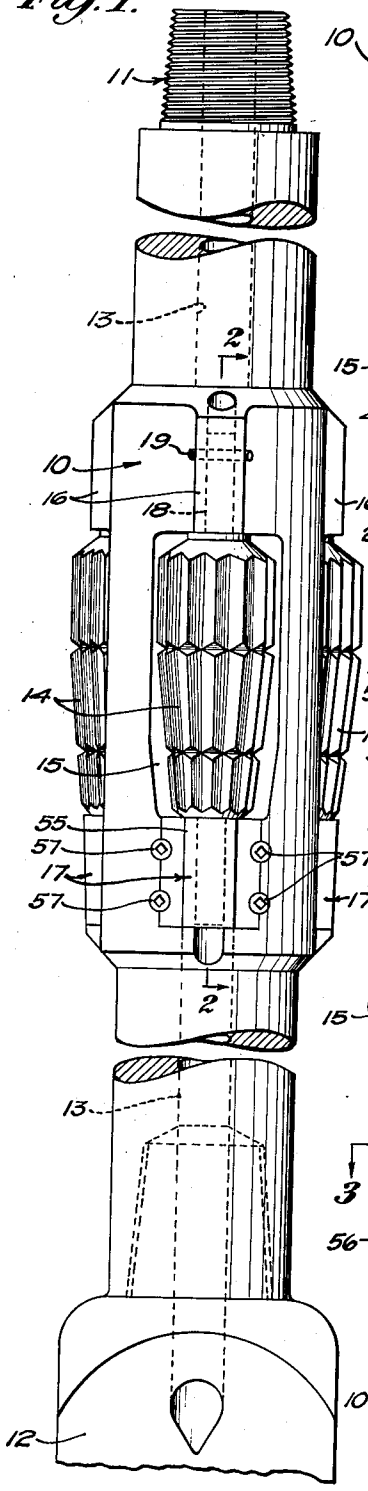

Fig. 2.

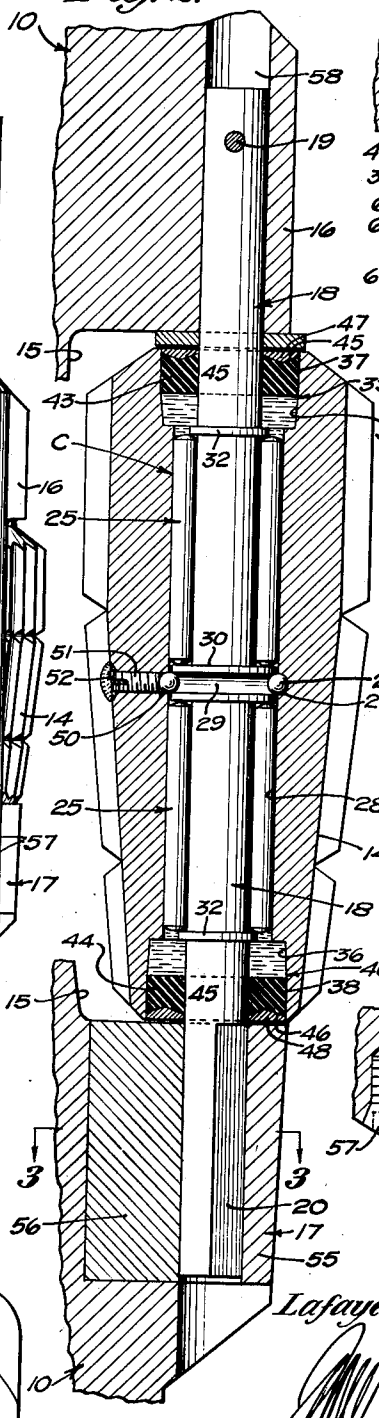

Fig. 4

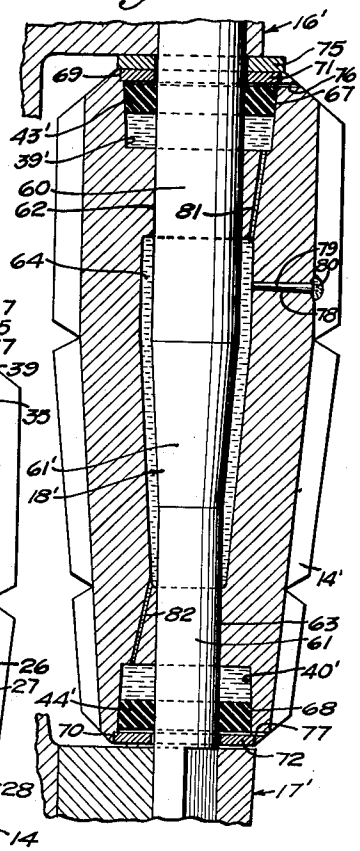

Fig. 3.

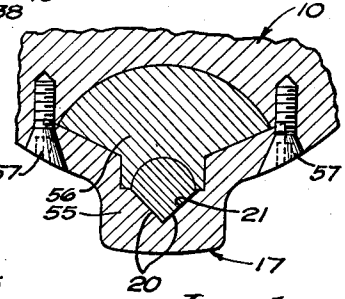

Inventor
Lafayette H. Kirkpatrick.

Attorney.

Jan. 16, 1940. L. H. KIRKPATRICK 2,187,037

WELL TOOL OR THE LIKE

Filed June 9, 1939 2 Sheets-Sheet 2

Fig. 5.

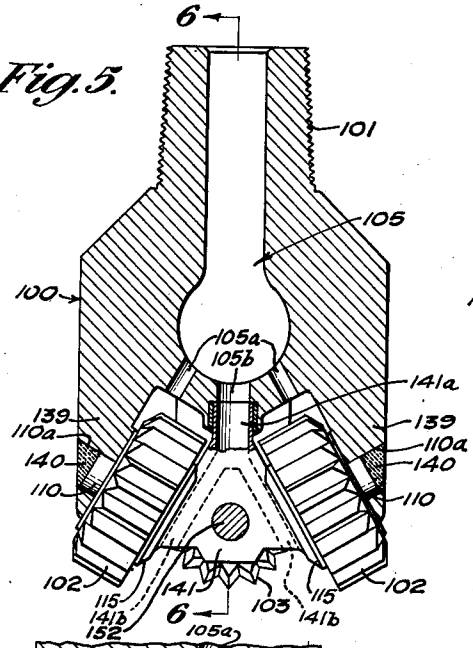

Fig. 6.

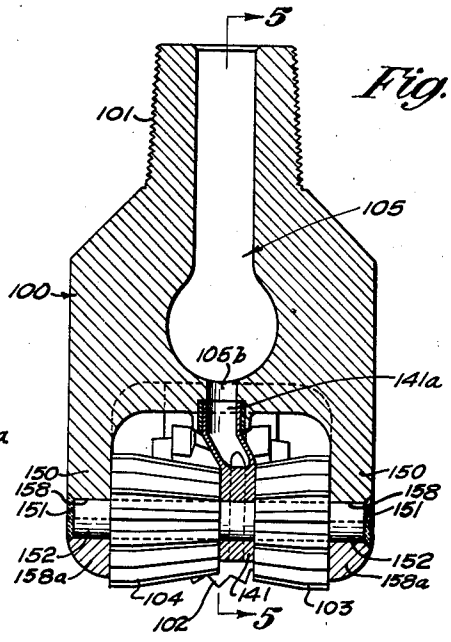

Fig. 7.

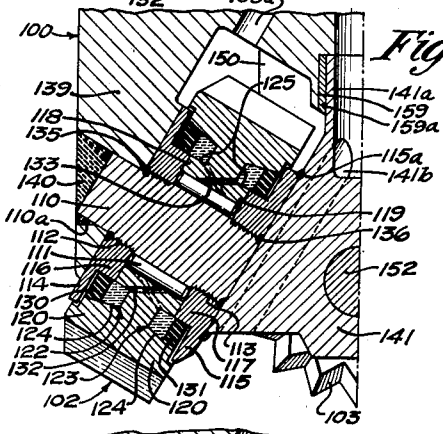

Fig. 8.

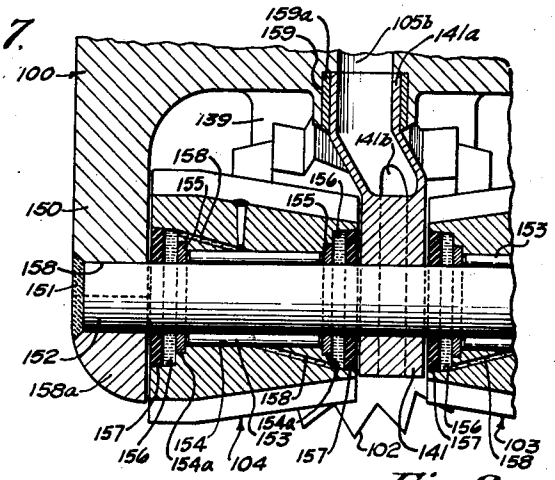

Fig. 9.

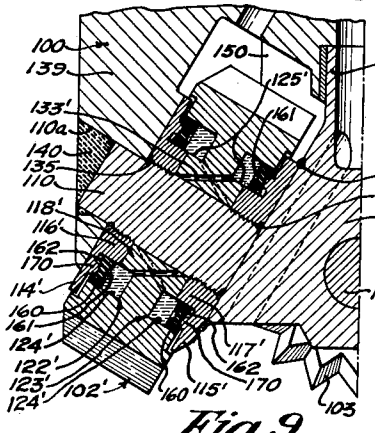

Fig. 10.

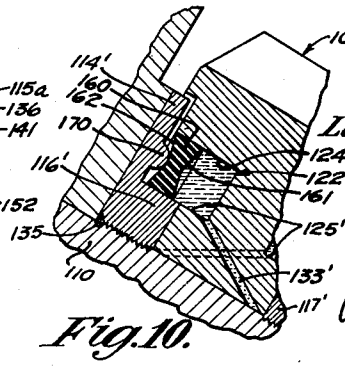

Inventor
Lafayette H. Kirkpatrick.

Attorney.

Patented Jan. 16, 1940

2,187,037

UNITED STATES PATENT OFFICE

2,187,037

WELL TOOL OR THE LIKE

Lafayette H. Kirkpatrick, Pasadena, Calif.

Application June 9, 1939, Serial No. 278,191

21 Claims. (Cl. 255—71)

This invention relates to oil well tools or the like such as rock bits, reamers, or any similar tools having rotatable cutters; and, in certain aspects, it more particularly relates to the bearing mountings of such cutters and improved means for lubricating the same. However, the bearing is of such nature that it may be utilized to advantage in any situation where it is to be submerged beneath fluid while in use, irrespective of the particular nature of the member which is supported for rotation, and therefore my claims are not to be considered as limited to particularities of supporting body or rotating members except when expressly specified. However, this broader aspect of the invention may be brought out advantageously in connection with a description of the embodiment in an oil well tool where all service and fluid-pressure conditions are particularly severe.

It has long been a serious problem properly to lubricate the cutters of oil well tools due to the extremely severe conditions to which such tools are subjected. For instance, the mud ladened circulating fluid (which is circulated downwardly through the tool and upwardly around the drill stem for the purpose of flushing the cutters and carrying the cuttings to the ground surface) is of an abrasive nature and, unless prevented, enters into the bearing mountings of the cutters and abrades them to such extent that the useful life of the tool is of relatively short span. Efforts have been made in the past to lubricate such cutter bearings by providing an internal lubricant supply and isolating this supply from the well fluid by placing barriers at the ends of the bearings, the bearings, proper, being between barriers and hence likewise protected from the well fluid. The barriers, however, have heretofore been rigidly mounted upon the tool-carrying body and, upon being subjected to extreme externally applied well pressure, they have distorted (due to the relatively low internal lubricant pressure opposing the inward buckling of the barriers), the distortion breaking the fluid seal and permitting free entrance of the abrasive circulating fluid to the lubricant and bearing surfaces.

An important object of the present invention is to provide a bearing structure which may be incorporated in, for instance, an earth boring tool for rotatably supporting cutters or the like, and which may be lubricated from an internal lubricant supply and yet not be subject to the infiltration of well fluid under conditions such as spoken of above. A further object of the invention is to provide, in combination with barrier means for sealing off and isolating the lubricated bearing from the well fluid, means for increasing the fluid sealing effect proportionately as the pressure of the well fluid increases, the arrangement thus acting automatically to vary the sealing effect in accordance with the instant demand.

In the present disclosure, I accomplish these and other objects by providing internal lubricant reservoirs communicating with the bearing surfaces, plus piston type or relatively movable barriers for sealing off the lubricant from the well fluid, the barriers being movable to adjust for variation in volume of the lubricant. The well fluid, of course, varies in pressure from one to hundreds of atmospheres, depending upon the depth of the well, and each time the tool is inserted into or withdrawn from a well of any appreciable depth, this great change in external pressure is imposed on the exposed sides of the pistons. Now all lubricants are compressible to some degree, and the change in volume resulting from such changes in external pressure which is imparted to the lubricant by the pistons, is considerable. My improved barriers readily transmit the pressure of the well fluid to the lubricant and adjust themselves to variations in lubricant volume without breaking the fluid seal.

The rigidly mounted barriers used heretofore, have failed largely because of their bodily immobility and hence their general inability to readily transmit to the lubricant the changes in pressure of the well fluid, it following that the barriers gave inwardly because of the radical pressure differential, allowing the fluid to pass the barriers in its attempt to equalize the pressure of the lubricant with that of the well fluid. Of course, when the barriers or packing means were set up tight enough to withstand this external pressure, this leakage did not take place. However, when this was done, the friction resisting rotation of the cutters was too great and thus rendered the tool useless.

Other objects and features of the invention will appear from the following detailed description, reference being had to the accompanying drawings, in which:

Fig. 1 is a side elevation of a typical reamer to which my invention has been applied;

Fig. 2 is an enlarged vertical section of one of the cutter assemblies taken as indicated on line 2—2 of Fig. 1;

Fig. 3 is a horizontal section taken on line 3—3 of Fig. 2;

Fig. 4 is a view similar to Fig. 2, but showing a modified form of cutter bearing assembly;

Fig. 5 is a vertical section of a typical rock bit to which my invention is applied, the section being taken as indicated by line 5—5 of Fig. 6;

Fig. 6 is a vertical section taken on line 6—6 of Fig. 5;

Fig. 7 is an enlarged fragmentary section of one of the side cutter assemblies viewed in the same aspect as Fig. 5;

Fig. 8 is an enlarged detail section of one of the bottom cutter assemblies viewed in the same aspect as Fig. 6;

Fig. 9 is a view similar to Fig. 7 but showing a modified bearing arrangement; and

Fig. 10 is an enlarged, fragmentary detail of the seal shown in Fig. 9.

The reamer shown in Figs. 1 to 3, comprises a body 10 threadably engageable at 11 with a drill string (not shown), and having coupled to its lower end a usual bit 12. The usual circulation passage 13 extends vertically through the tool.

Toothed cutters 14, typically three in number, are carried by the body and are partly received by body recesses 15. Above and below these recesses, the body is provided with bosses 16 and 17, respectively, which receive the end portions of fixed shafts 18. Shafts 18 are held against rotation by being pinned at 19 at their upper ends to bosses 16, while their lower ends are provided with flat surfaces 20 engageable with complementary bores 21 in bosses 17. Cutters 14 are rotatably mounted on shafts 18 by means of antifriction bearings comprising radial thrust roller bearings 25 and end thrust ball bearings 26, the latter being received by annular ball race 27, provided in bore 28 of each cutter, and annular ball race 29 provided in fixed collar 30 on each shaft 18. Shafts 18 are provided with flanges 32 for the purpose of preventing axial displacement of roller bearings 25; while the opposed ends of the rollers abut collar 30.

Bore 28 of each cutter is at each end counterbored to provide upper and lower conical bores 35 and 36 and adjoining cylindric counterbore portions 37 and 38. The upper and lower counterbores, each made up of a conical and cylindrical bore, are generally designated by the reference numerals 39 and 40, respectively. Cylindric portions 37 and 38, of counterbores 39 and 40, are adapted to receive with fluid-tight peripheral engagement barriers 43 and 44, respectively, the barriers or pistons being in the form of rings surrounding shaft portions 45 and having fluid tight peripheral engagement therewith. The barriers are preferably made of a resilient material such as rubber—preferably a synthetic, oil resistant rubber-like composition. For reasons described below, the outer ends of the barriers may be provided with annular V-shaped grooves 45 and 46 and, if desired, may have complementary shaped wedge rings 47 and 48 applied thereto, respectively, said rings preferably being relatively rigid.

The otherwise unoccupied space in chamber C within which lie shaft 18 and bearings 25 and 26 (which chamber is defined by the walls of bores 28, counterbores 39 and 40, and the opposed ends of barriers 43 and 44) is completely filled with lubricant, counterbores 35 and 36 serving as lubricant reservoirs. Accordingly, the bearing mountings of cutters 14 are completely lubricated and are isolated from the external well fluid by barriers 43 and 44.

In this connection it will be realized that between all "bearing" faces are usual bearing clearances which clearances (not indicated because of their relatively small dimension) receive a film of lubricant and may be considered broadly as a part of chamber C. In fact, in certain variations to be described, the roller bearings are omitted and the cutter and shaft have direct "bearing", in which case, the clearances spoken of above form communication passageways between the bearing faces and the reservoirs.

The outer ends of the barriers, or the wedge rings applied thereto, are exposed to the well fluid and subjected to the pressure thereof. If the pressure of the well fluid exceeds that of the lubricant, the differential in pressure will act upon the barriers tending to move them axially inwardly until these pressures are substantially equalized, the movement required being theoretically dependent upon the compressibility of the lubricant for any given change in pressure. The barriers, in the position illustrated in Fig. 2, substantially occupy the cylindric portions 37 and 38 of the counterbores and slightly enter the conical portions 35 and 36 of their respective counterbores. Accordingly, upon such inward axial movement of the barriers and the consequent increased wedging effect imposed by the conical walls on the peripheries of the barriers, the fluid sealing effect between the barriers and the counterbores and between the barriers and the shaft will be of steadily increasing effectiveness. The fluid seal of the barriers with the counterbores and shaft 18, is also increased in effectiveness by the wedging action of wedge rings 47 and 48 against the inclined walls of the barrier grooves.

The degree of capacity to bodily deformation of the barrier depends upon the "durometer" of the barrier material. The more yielding the material, the greater will be its deformation under given pressure and its consequent capacity for increasing the effectiveness of the fluid seal, and the less will be the effect of abrasive material in the well fluid. For instance, such material tends to imbed itself in such relatively yieldable material, rather than lodging between the bearing faces and causing scoring, as in the case of less yielding materials. There is, however, a factor limiting the degree of allowable softness for this material, this factor being the friction tending to resist rotation of the cutters, which friction increases in value directly as the degree of deformability or degree of softness of the material increases, for with an increase in the degree of softness of the material, there is increased capacity for movement into the diminishing conical bore and if this movement is excessive, excessive frictional drag will be placed on the cutters. I have found that various synthetic rubber compositions such as "Duprene" or "Anchorite" have a degree of yieldability permitting the described increased effectiveness of the seal without causing excessive friction.

The procedure for assembling each cutter may be as follows. Shaft 18, together with its loosely assembled roller bearings 25, is inserted within bore 28 of the cutter, and end thrust ball bearings 26 are dropped through cutter bore 15 onto race 27. During assembly, the spaces between bearings 25 and 26 in bore 28, and the counterbores 39 and 40 are completely filled with lubricant, care being taken to eliminate air as far as possible, for entrapped air has the effect of in-

creasing the compressibility of the lubricant. Barriers 43 and 44 are then forced into their respective counterbores, displacing a corresponding mass of lubricant as they are entered, excess lubricant being forced out through bore 50 around the initially comparatively loosely fitting threaded plug 51. When sufficient lubricant has been displaced to permit the full sealing of the barriers, the cutter chamber is finally sealed off as by completely closing bore 50 with weld material 52.

As shown in Fig. 3, boss 17 comprises complemental parts 55 and 56 secured to the body by screws 57. With these parts removed, the cutter assembly may be applied to the body by first inserting the upper end of shaft 18 into bore 58 of boss 16 (upwardly from below). Part 56 is then rotated behind shaft 18 and finally fixed in place by cap 55 which is secured to the body by screws 57.

A variational form of the bearing mounting of the cutters is shown in Fig. 4. Here the cutter 14' is journalled for rotation on shaft 18' which is secured at its ends to body bosses 16' and 17'. Shaft 18' comprises upper shaft portion 60 and lower, relatively reduced shaft portion 61 connected by a taper portion 61', the cutter being mounted for rotation on said shaft portions 60 and 61 at 62 and 63, respectively. Intermediate bearing portions 62 and 63, the cutter is centrally recessed at 64 to provide a lubricant reservoir communicating at opposite ends with bearings 62 and 63, and, by way of ports 81 and 82, with counterbores 39' and 40', respectively, which latter form a part of the reservoir system. Each cutter, as before, is counterbored at each end for the reception of barriers 43' and 44'. The counterbores 39' and 40', however, are in this instance fully conical throughout their length, and barriers 43' and 44' are complementally formed with outer conical surfaces 67 and 68. The ends of the cutters may be further counterbored at 69 and 70 for the reception of barrier-retaining washers 71 and 72 which are force-fitted within said counterbores. The upward thrust of cutter 14' is taken by thrust washer 75 placed between washer 71 at the upper end of the cutter and boss 16'.

The outer end of the barriers 43' and 44' are exposed to the well fluid pressure by ports 76 and 77 which open to the exterior of the tool and to the spaces between the barriers and washers 71, 72.

I may, for the purposes of facilitating assembly, provide cutter 14' with a small tapered bore 78 through which the lubricant may be bled during full seating of the barriers, the bore 78 thereafter being closed by tapered plug 79 and, if desired, positively sealed by welding as at 80.

In this case it will be seen that the usual bearing clearances (not indicated because of their relatively small dimension) between shaft portions 60 and 61 and cutter portions 62 and 63, respectively, provide passageways which not only receive a film of lubricant, for bearing purpose, but also put the counterbores 39' and 40' in communication with each other, with recess 64 and with the "bearing" faces of shaft and cutter.

Figs. 5 to 8, inclusive, illustrate my invention as applied to a rock bit indicated at 100. The bit is shown with the usual threaded connections 101 for engagement with the usual drill string, not shown.

The tool comprises side cutters 102 and bottom cutters 103 and 104. The passages for mud circulation through the tool are indicated at 105. The side cutters are identical in construction, and it is to be understood that the description of the one shown in detail in Fig. 7 will apply to the other. Cutter 102 is rotatably mounted on shaft 110 by means of roller bearings 111. Shaft 110 has threadably secured thereto at 112 and 113 flanged nuts 114 and 115, the hub portions 116 and 117 thereof engaging the hub portions 118 and 119 of the cutter to prevent axial displacement thereof. Provided in the opposite ends of cutter 102 are annular grooves 122 and 123, each having a conical side wall 124 and a cylindrical side wall 125. Cylindrical side walls 125 are substantially continuous with the peripheral surfaces of hubs 116 and 117.

Barriers 130 and 131 are adapted to have fluid-tight engagement with the peripheral surfaces of hubs 116 and 117 and with the conical walls 124 of annular recesses 122 and 123, respectively, the annuli 120 of the side cutter overlying said hub portions. The spaces defined by the walls of the annular recesses and the inner faces of barriers 130 and 131 constitute lubricant reservoirs which have communication with the bearing surfaces via passageways 132 and 133.

The procedure of assembly of the side cutter may be as follows, the assembly of shaft, cutters, bearings and barriers being accomplished to form a unit which is then bodily applied to the bit body, it being understood that web 141 is not applied to the body or to the unit until after the unit is in the position of Fig. 7. Flange 115 is first threaded on shaft 110 and welded thereto as indicated at 136. Then barrier 131 is placed on hub 117. Bearings 111 and side cutter 102 are then applied to the shaft, lubricant having been placed within the annular grooves 122 and 123, passageways 132 and 133, and within the space surrounding bearings 111. Flange 114, having barrier 130 mounted on its hub 116, is then threaded on the shaft until hub portions 118 and 119 of the cutter are confined between hub portions 116 and 117. During this operation, barriers 130 and 131 will have seated respectively against conical walls 124 of annular grooves 122 and 123, excess lubricant having escaped through the threaded connection at 112 which is finally sealed by welding material as at 135. The assembled unit, so far described, is then applied to the body of inserting shaft 110 in leg-bore 110a and welding the shaft to the leg 139 as at 140. Web 141, to be later described, is then positioned as in Fig. 7 and welded to flange 115 at 115a.

Bottom cutters 103 and 104 are substantially identical in construction except for the fact that bottom cutter 104 is the longer of the two and extends to the axial center of the tool. Otherwise, the description of one will apply to the other. Mounted in body legs 150 and secured thereto as by welding at 151 is a horizontal shaft 152 which extends through body web 141. Cutter 104 is rotatably mounted on shaft 152 by means of roller bearings 153. Press-fitted into counterbores 154a provided at the ends of the bore which presents annular bearing surface 154, are roller-bearing-retaining washers 155. The ends of the cutter are provided with conical counterbores 156 which receive annular piston barriers 157 and serve as lubricant reservoirs, there being passaged communication at 158 with the bearing surfaces.

Counterbores 156 and barriers 157 are substantially the same in arrangement and operation as described in connection with the similar elements

of the reamer cutter shown in Fig. 4, and therefore the description pertaining thereto will also apply in this instance.

Assembly of the bottom cutters with the tool body may be as follows. Web 101 and cutters 103 and 104 are first mounted on shaft 152, the cutters being mounted for instance, in the manner described in connection with the assembly of the structure shown in Figs. 1 to 4. The cutter, shaft and web assembly is then thrust upwardly into position of Fig. 8, the shaft ends being entered in grooves 158 of body legs 150 and welded thereto, and nipple position 141a of the web being entered in body bore 159 which may contain packing 159a. Thereupon, caps 158a are welded to the shaft and to the body legs as at 151, and web 141 is welded at 115a to flanges 115 of the side-cutter assembly.

Circulation fluid pumped into circulation passage 105 from the drill string is discharged therefrom through ports 105a and 105b. Ports 105a are directed toward the side cutters so that the discharged fluid will flush said cutters. Port 105b communicates with nipple 141a and web ports 141b, the latter extending downwardly through the web and around shaft 152 at opposite sides thereof. Fluid discharged from ports 141a circulates at the well bottom to clean it of cuttings and to then carry the cuttings upwardly around the tool and to the ground surface.

The modified form of side cutter shown in Fig. 9 varies from the showing of Fig. 7 mainly in the shape of the counterbore, the shape of the barriers, and the omission of roller bearings 111. Otherwise, the construction of this side cutter mounting is substantially the same as shown in Fig. 7 and unchanged parts will bear the same reference numerals as in Fig. 7.

In this form, the side cutter 102' is mounted for rotation directly upon shaft 110, and is held from axial movement by engagement with hub portions 116' and 117' of flanges 114' and 115'. The annular grooves 122' and 123' are bounded by cylindrical side walls 124' and 125', and side walls 125' are substantially continuous with the peripheral surfaces of hub portions 116' and 117'. Positioned between these last mentioned peripheral surfaces and side walls 124' of the annular grooves are piston barriers 160 which, in this instance, are provided with annular V-shaped grooves in their opposed ends at 161 and also in their outer ends at 162. The barriers are provided with these V-shaped surfaces in order that components of the pressural forces of the fluid acting thereagainst may be directed radially and thus increase the effectiveness of the fluid seal for a given pressure.

Under certain circumstances, there may be a tendency for the barriers to move apart under increased internal lubricant pressure. For instance, the fluid in certain wells is of exceedingly high temperature, the heat transmitted to the lubricant being sufficient to expand the lubricant to an extent driving the barriers outwardly against the effective well pressure. In such an event, a given barrier is checked in its outward bodily movement by the associated annular rib 170, there being such a rib formed on each of the flanges 114' and 115'. Thereafter, the internal pressure is effective to bend the peripheral edges 160a and 160b about rib 170 as a fulcrum in a manner tending to spread these edges apart and thus effecting a tighter seal.

While I have shown and described several embodiments of my invention, various changes in design, structure and arrangement may be made without departing from the spirit and scope of the appended claims.

I claim:

1. In a device adapted to be exposed to external fluid pressure, a supporting member, a shaft element and a rotatable element associated to have rotational bearing one on the other, one of the elements being connected to the supporting member, the bearing between elements being located inwardly from the ends thereof, there being provided a pair of annular chambers in one of the elements and coaxial with the shaft element, said chambers being located near opposite ends of said bearing, a pair of annular pistons located one in each chamber and having fluid-tight peripheral fit with both said elements, the inner end faces of said pistons defining one end of the associated chamber and the pistons being bodily movable axially of the shaft and chambers, the outer end faces of said pistons being exposed in a manner to receive the force of external fluid pressure, there being a passageway putting the piston-defined chambers into communication one with the other, and a body of lubricant substantially filling said piston-defined chambers and passageway and in lubricating communication with said bearing.

2. In a device adapted to be exposed to external fluid pressure, a supporting member, a shaft element and a rotatable element associated to have rotational bearing one on the other, one of the elements being connected to the supporting member, the bearing between elements being located inwardly from the ends thereof, there being provided a pair of annular chambers in one of the elements and coaxial with the shaft element, said chambers being located near opposite ends of said bearing, a pair of radially compressible annular pistons located one in each chamber and having fluid-tight peripheral fit with both said elements, the inner end faces of said pistons defining one end of the associated chamber and the pistons being bodily movable axially of the shaft and chambers, the piston-defined chambers having conical portions which taper towards the center of the associated element, said pistons being adapted to be radially compressed as they are moved bodily and axially through said portions towards one another, the outer end faces of said pistons being exposed in a manner to receive the force of external fluid pressure, there being a passageway putting the piston-defined chambers into communication one with the other, and a body of lubricant substantially filling said piston-defined chambers and passageway and in lubricating communication with said bearing.

3. In a device adapted to be exposed to external fluid pressure, a supporting member, a shaft element and a rotatable element associated to have rotational bearing one on the other, one of the elements being connected to the supporting member, the bearing between elements being located inwardly from the ends thereof, there being provided a pair of annular chambers in one of the elements and coaxial with the shaft element, said chambers being located near opposite ends of said bearing, a pair of radially resilient annular pistons located one in each chamber and having fluid-tight peripheral fit with both said elements, the inner end faces of said pistons defining one end of the associated chamber and the pistons being bodily movable axially of the shaft and chambers, the piston-defined chambers hav-

ing conical portions which taper towards the center of the associated element, said pistons being adapted to be radially compressed as they are moved bodily and axially through said portions towards one another and to resiliently, radially expand as they are moved in an opposite direction through said portions, the outer end faces of said pistons being exposed in a manner to receive the force of external fluid pressure, there being a passageway putting the piston-defined chambers into communication one with the other, and a body of lubricant substantially filling said piston-defined chambers and passageway and in lubricating communication with said bearing.

4. In a device adapted to be exposed to external fluid pressure, a supporting member, a shaft element and a rotatable element associated to have rotational bearing one on the other, one of the elements being connected to the supporting member, the bearing between elements being located inwardly from the ends thereof, there being provided a pair of annular chambers in one of the elements and coaxial with the shaft element, said chambers being located near opposite ends of said bearing, there being an annular passageway between the elements and between the chambers, communication between chambers and between the chambers and the bearing being provided via said passageway, a pair of annular pistons located one in each chamber and having fluid-tight peripheral fit with both said elements, the inner end faces of said pistons defining one end of the associated chamber and the pistons being bodily movable axially of the shaft and chambers, the outer end faces of said pistons being exposed in a manner to receive the force of external fluid pressure, and a body of lubricant filling said piston-defined chambers and the passageway.

5. In a device adapted to be exposed to external fluid pressure, a supporting member, a shaft element and a rotatable element associated to have rotational bearing one on the other, one of the elements being connected to the supporting member, the bearing between elements being located inwardly from the ends thereof, there being provided a pair of annular chambers in one of the elements and coaxial with the shaft element, said chambers being located near opposite ends of said bearing, there being an annular passageway between the elements and between the chambers, anti-friction bearing elements in said passageway, communication between chambers and between the chambers and the bearing being provided via said passageway, a pair of annular pistons located one in each chamber and having fluid-tight peripheral fit with both said elements, the inner end faces of said pistons defining one end of the associated chamber and the pistons being bodily movable axially of the shaft and chambers, the outer end faces of said pistons being exposed in a manner to receive the force of external fluid pressure, and a body of lubricant filling said piston-defined chambers and the otherwise unoccupied space within the passageway.

6. In a device adapted to be exposed to external fluid pressure, a supporting member, a shaft element and a rotatable element associated to have rotational bearing one on the other, one of the elements being connected to the supporting member, the bearing between elements being located inwardly from the ends thereof, there being provided a pair of annular chambers in one of the elements and coaxial with the shaft element, said chambers being located near opposite ends of said bearing, there being an annular passageway between the elements and between the chambers, radial and end-thrust anti-friction bearing elements in said passageway, communication between chambers and between the chambers and the bearing being provided via said passageway, a pair of annular pistons located one in each chamber and having fluid-tight peripheral fit with both said elements, the inner end faces of said pistons defining one end of the associated chamber and the pistons being bodily movable axially of the shaft and chambers, the outer end faces of said pistons being exposed in a manner to receive the force of external fluid pressure, and a body of lubricant filling said piston-defined chambers and the otherwise unoccupied space within the passageway.

7. In a device adapted to be exposed to external fluid pressure, a supporting member, a shaft element and a rotatable element associated to have rotational bearing one on the other, one of the elements being connected to the supporting member, the bearing between elements being located inwardly from the ends thereof, there being provided a pair of annular chambers in one of the elements and coaxial with the shaft element, said chambers being located near opposite ends of said bearing, there being an annular passageway between the elements and extending from chamber to chamber, antifriction bearing elements in said passageway, communication between the chambers and the bearing being via the passageway, a pair of annular pistons located one in each chamber and having fluid-tight peripheral fit with both said elements, the inner end faces of said pistons defining one end of the associated chamber and the pistons being bodily movable axially of the shaft and chambers, the outer end faces of said pistons being exposed in a manner to receive the force of external fluid pressure, and a body of lubricant filling said piston-defined chambers and the otherwise unoccupied space within the passageway.

8. In a device adapted to be exposed to external fluid pressure, a supporting member, a shaft element and a rotatable element associated to have rotational bearing one on the other, one of the elements being connected to the supporting member, the bearing between elements being located inwardly from the ends thereof, there being provided a pair of annular chambers in one of the elements and coaxial with the shaft element, said chambers being located near opposite ends of said bearing, a pair of radially deformable annular pistons located one in each chamber and having fluid-tight peripheral fit with both said elements, the inner end faces of said pistons defining one end of the associated chamber and the pistons being bodily movable axially of the shaft and chambers, the outer end face of each piston having formed therein a substantially V-shaped annular groove, a pair of relatively rigid rings substantially complementary to and entered, one each, in said grooves, the outer end faces of said rings being exposed in a manner to receive the force of external fluid pressure, there being a passageway putting the piston-defined chambers into communication one with the other, and a body of lubricant substantially filling said piston-defined chambers and passageway and in lubricating communication with said bearing.

9. In a device adapted to be exposed to external fluid pressure, a supporting member, a pair of elements having rotational bearing one

with the other, one of said elements being connected to said supporting member, and means for maintaining lubricating fluid between the coacting bearing surfaces of said elements, said means comprising a pair of barrier members each having fluid sealing engagement with both of said elements, there being formed a lubricant space closed at its ends by the inner faces of said barriers and including a clearance space between the bearing surfaces, and a body of lubricating fluid confined within said space, the outer faces of said barrier members being exposed in a manner to receive the force of external fluid pressure, one of said barrier members having capacity for bodily movement relative to the other whereby the lubricant pressure is variable in accordance with variations of the external pressure.

10. In a device adapted to be exposed to external fluid pressure, a supporting member, a pair of elements having rotational bearing one with the other, one of said elements being connected to said supporting member, and means for maintaining lubricating fluid between the coacting bearing surfaces of said elements, said means comprising a pair of barrier members each having fluid sealing engagement with both of said elements, there being formed a lubricant space closed at its ends by the inner faces of said barriers and including a clearance space between the bearing surfaces, a body of lubricating fluid confined within said space, the outer faces of said barrier members being exposed in a manner to receive the force of external fluid pressure, one of said barrier members having capacity for bodily movement relative to the other whereby the lubricant pressure is variable in accordance with variations of the external pressure, and means for increasing the effectiveness of the sealing engagement of the barriers with said elements by virtue of a variation in external fluid pressure.

11. In a device adapted to be exposed to external fluid pressure, a supporting member, a pair of elements having rotational bearing one with the other, one of said elements being connected to said supporting member, and means for maintaining lubricating fluid between the coacting bearing surfaces of said elements, said means comprising a pair of barrier members each having fluid sealing engagement with both of said elements, there being formed a lubricant space closed at its ends by the inner faces of said barriers and including a clearance space between the bearing surfaces, a body of lubricating fluid confined within said space, the outer faces of said barrier members being exposed in a manner to receive the force of external fluid pressure, one of said barrier members having capacity for bodily movement relative to the other whereby the lubricant pressure is variable in accordance with variations of the external pressure, and means for increasing the effectiveness of the sealing engagement of the barriers with said elements by virtue of an increase in external fluid pressure.

12. In a device adapted to be exposed to external fluid pressure, a supporting member, a pair of elements having rotational bearing one with the other, one of said elements being connected to said supporting member, and means for maintaining lubricating fluid between the coacting bearing surfaces of said elements, said means comprising a pair of barrier members each having fluid sealing engagement with both of said elements, there being formed a lubricant space closed at its ends by the inner faces of said barriers and including a clearance space between the bearing surfaces, a body of lubricating fluid confined within said space, the outer faces of said barrier members being exposed in a manner to receive the force of external fluid pressure, one of said barrier members having capacity for bodily movement relative to the other whereby the lubricant pressure is variable in accordance with variations of the external pressure, and means for increasing the effectiveness of the sealing engagement of the barriers with said elements by virtue of a variation in external fluid pressure, said means comprising a wedge surface on one of said elements engageable by said last mentioned barrier member in its bodily movement.

13. In a well tool adapted to be exposed to external fluid pressure, a body member, a shaft carried by said member and held against rotation with respect thereto, a cutter having rotational bearing on said shaft, and means for maintaining lubricating fluid between the bearing surfaces of said shaft and cutter, said means comprising a pair of annular piston barriers each encircling and having fluid sealing engagement with the shaft and being slidable with fluid sealing engagement through bores provided in the cutter at opposite ends of the bearing surfaces, said bores being in constant communication one with the other and with a clearance space between the bearing surfaces, and a body of lubricating fluid confined within the clearance space by the inner ends of the piston barriers, said piston barriers being exposed at their outer ends in a manner to receive the force of external fluid pressure.

14. In a well tool adapted to be exposed to external fluid pressure, a body member, a shaft carried by said member and held against rotation with respect thereto, a cutter having rotational bearing on said shaft, and means for maintaining lubricating fluid between the bearing surfaces of said shaft and cutter, said means comprising a pair of annular piston barriers each encircling and having fluid sealing engagement with the shaft and being slidable with fluid sealing engagement through bores provided in the cutter at opposite ends of the bearing surfaces, said bores being inwardly tapered whereby to increase the effectiveness of the sealing engagement with said piston barriers upon movement of said piston barriers inwardly of said bores, said bores being in constant communication one with the other and with a clearance space between the bearing surfaces, and a body of lubricating fluid confined within the clearance space by the inner ends of the piston barriers, said piston barriers being exposed at their outer ends in a manner to receive the force of external fluid pressure.

15. In a well tool adapted to be exposed to external fluid pressure, a body member, a shaft carried by said member and held against rotation with respect thereto, a cutter having rotational bearing on said shaft, and means for maintaining lubricating fluid between the bearing surfaces of said shaft and cutter, said means comprising a pair of radially yieldable annular piston barriers each encircling and having fluid sealing engagement with the shaft and being slidable with fluid sealing engagement through bores provided in the cutter at opposite ends of the bearing surfaces, said bores being in constant communication one with the other and with a clearance space between the bearing surfaces, and a body of lubricating

fluid confined within the clearance space by the inner ends of the piston barriers, said piston barriers being exposed at their outer ends in a manner to receive the force of external fluid pressure.

16. In a well tool adapted to be exposed to external fluid pressure, a body member, a shaft carried by said member and held against rotation with respect thereto, a cutter having rotational bearing on said shaft, and means for maintaining lubricating fluid between the bearing surfaces of said shaft and cutter, said means comprising a pair of radially yieldable annular piston barriers each encircling and having fluid sealing engagement with the shaft and being axially movable with the fluid sealing engagement in tapered bores provided in the cutter at opposite ends of the bearing surfaces, said bores being in constant communication one with the other and with a clearance space between the bearing surfaces, and a body of lubricating fluid confined within the clearance space by the inner ends of the piston barriers, said piston barriers being exposed at their outer ends in a manner to receive the force of external fluid pressure.

17. In a well tool adapted to be exposed to external fluid pressure, a body member, a shaft carried by said member and held against rotation with respect thereto, a cutter having rotational bearing on said shaft, and means for maintaining lubricating fluid between the bearing surfaces of said shaft and cutter, said means comprising a pair of relatively axially movable annular piston barriers, each encircling the shaft and having fluid sealing engagement with the shaft and said cutter, there being formed by said shaft and cutter and between the inner ends of the piston barriers a closed lubricant space communicating with a clearance space between the bearing surfaces, and a body of lubricating fluid within said spaces, said piston barriers being exposed at their outer ends in a manner to receive the force of external fluid pressure.

18. In a well tool, a body member, a shaft carried by said member, a cutter having an axially extending bore adapted to take said shaft but of a diameter to provide an annular space between the shaft and the bore-wall, bearing elements in said annular space, means limiting the end play of the cutter along the shaft, a pair of chambers sunk, one each, in opposite ends of the cutter and in communication with said space, and a pair of piston barriers provided one for each of said chambers and movable bodily axially therein.

19. In a well tool, a body member, a shaft carried by said member, a cutter having an axially extending bore adapted to take said shaft but of a diameter to provide an annular space between the shaft and the bore-wall, bearing elements in said annular space, means limiting the end play of the cutter along the shaft, a pair of annular chambers sunk, one each, in opposite ends of the cutter and in communication with said space, said chambers being coaxial with but radially spaced from said bore, and a pair of annular piston barriers provided one for each of said chambers and movable bodily axially therein.

20. In a well tool, a body member, a shaft carried by said member, a cutter having an axially extending bore adapted to take said shaft but of a diameter to provide an annular space between the shaft and the borewall, bearing elements in said annular space, means limiting the end play of the cutter along the shaft, a pair of annular chambers sunk, one each, in opposite ends of the cutter and in communication with said space, said chambers being coaxial with but radially spaced from said bore, one of the peripheral walls of each of the chambers having a portion, at least, tapering with respect to the cutter axis to progressively decrease the radial extent of the chambers as their inner ends are approached, and a pair of annular piston barriers provided for each of said chambers and movable bodily axially therein.

21. In a well tool, a body member, a shaft carried by said member, a cutter having an axially extending bore adapted to take said shaft with bearing clearance, means limiting the end play of the cutter along the shaft, a pair of annular chambers sunk, one each, in opposite ends of the cutter and in communication with the space developed by the bearing clearance, said chambers being coaxial with but radially spaced from said bore, and a pair of annular piston barriers provided one for each of said chambers and movable bodily axially therein.

LAFAYETTE H. KIRKPATRICK.