Jan. 26, 1943. G. J. TRAPP ET AL 2,309,551

PUMP

Filed Aug. 22, 1940 3 Sheets-Sheet 1

Fig. 1.

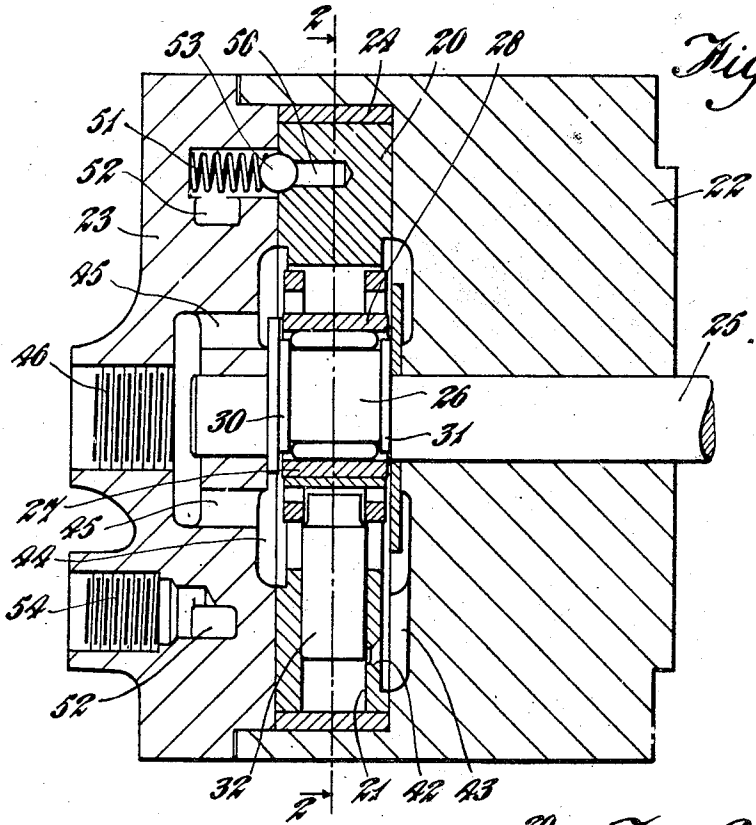

Fig. 2.

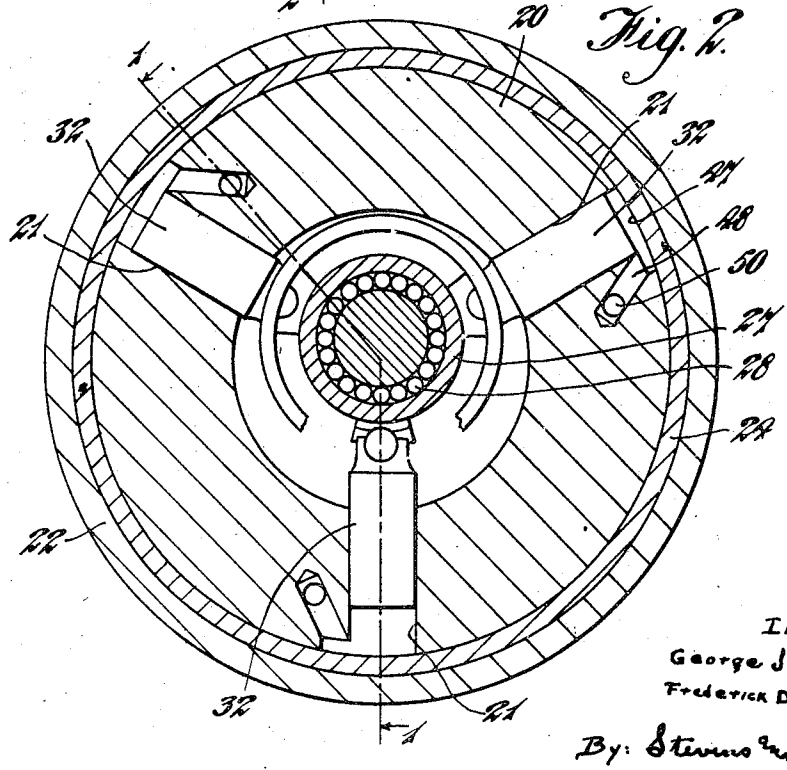

INVENTORS
George J. Trapp
Frederick D. Foottit

By: Stevens and Davis
ATTY'S

Jan. 26, 1943. G. J. TRAPP ET AL 2,309,551

PUMP

Filed Aug. 22, 1940 3 Sheets-Sheet 2

Fig. 3.

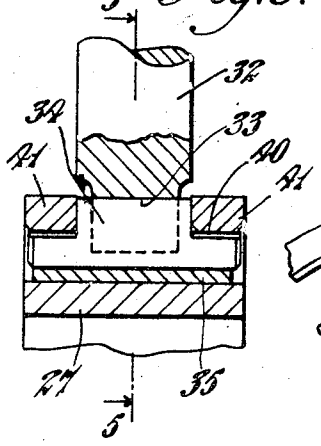

Fig. 4.

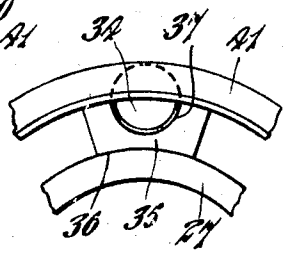

Fig. 5.

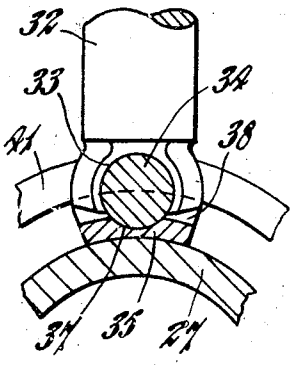

Fig. 6.

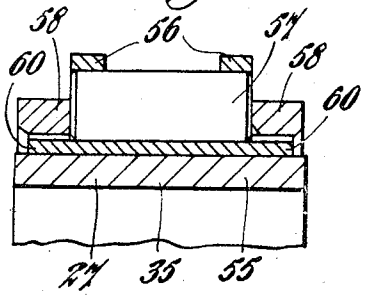

Fig. 7.

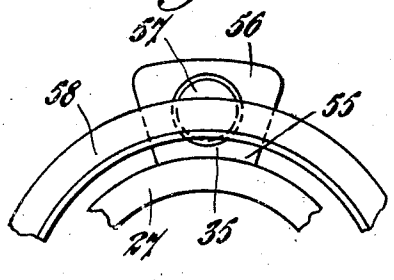

Fig. 8.

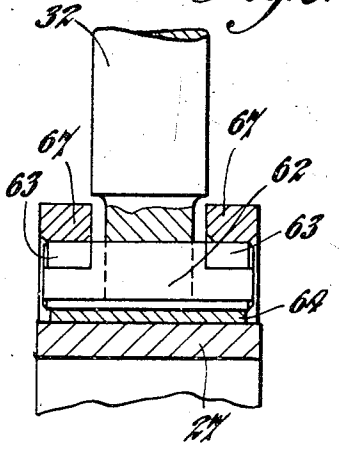

Fig. 9.

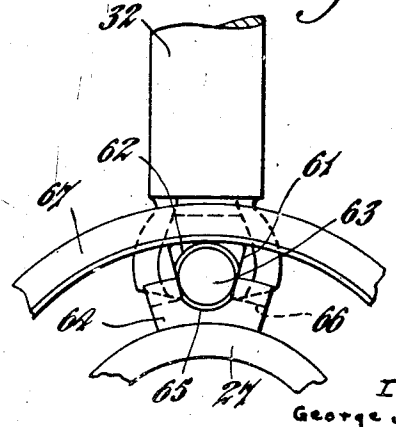

INVENTORS
George J. Trapp and
Frederick D. Foottit

By: Stevens and Davis
ATTY'S.

Jan. 26, 1943. G. J. TRAPP ET AL 2,309,551

PUMP

Filed Aug. 22, 1940 3 Sheets-Sheet 3

Fig. 10.

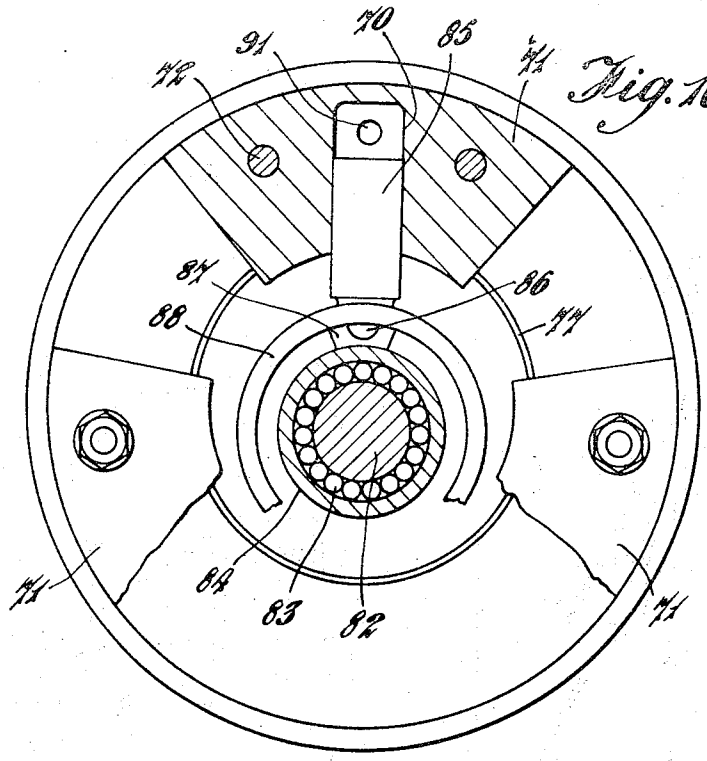

Fig. 11.

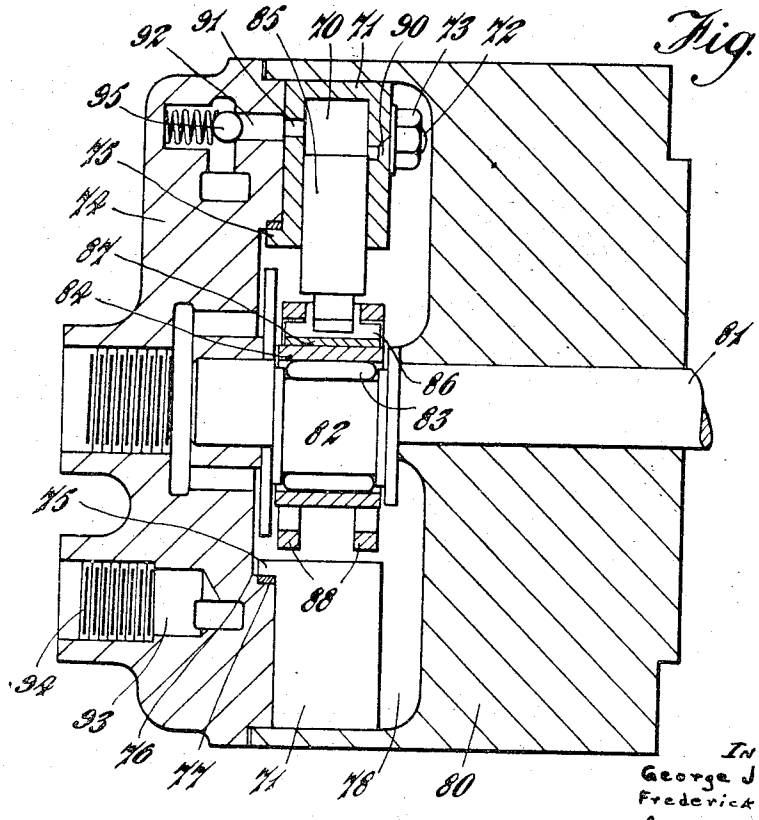

INVENTORS
George J. Trapp and
Frederick D. Foottit
By: Stevens and Davis
ATTY'S.

Patented Jan. 26, 1943

2,309,551

UNITED STATES PATENT OFFICE

2,309,551

PUMP

George Joseph Trapp and Frederick Donald Foottit, London, England, assignors to Automotive Products Company Limited, London, England

Application August 22, 1940, Serial No. 353,748
In Great Britain November 3, 1939

10 Claims. (Cl. 103—174)

This invention relates to pumps of the kind comprising a multiplicity of plungers reciprocated by the rotation of a crank or eccentric, in radial cylinders formed in a pump body, the plungers being so engaged with a driving sleeve turning freely on the crank or eccentric, that they are positively moved on both pressure and suction strokes.

In previous pumps of this kind, it has been found necessary to provide a substantial amount of space at the centre of the pump for the connections between the plungers and the sleeve, thus producing a pump of comparatively large overall diameter, and it is the object of the present invention to provide a plunger assembly which enables the overall diameter of the pump to be kept to relatively small dimensions.

According to the present invention, the pump plungers are formed at their inner ends with transverse grooves, the walls of which converge towards the end faces of the plungers, and correspondingly shaped pins fitting in the grooves are located by shoes bearing on the driving sleeve, the said shoes and/or pins being restrained against radial movement relative to said sleeve by retaining rings.

The grooves in the plungers may be of cylindrical form, the cross-section of the groove defining an arc substantially greater than a semi-circle, and the pins being of cylindrical form. The pins may be cut away at their ends to substantially semi-cylindrical form, the retaining rings being fitted directly over the cut-away ends, and the pins may be engaged in grooves in the shoes and retained therein by the retaining rings. Alternatively, the pins may pass through apertured lugs on the shoes, the retaining rings engaging the shoes beyond the ends of said pins.

In one form of pump, according to the invention, the pump cylinders comprise a series of radial bores in a steel ring of substantially rectangular cross-section, said bores passing completely through the ring and being closed at their outer ends by a second ring shrunk on to the main ring. In another form of pump, according to the invention, each pump cylinder is formed in a separate sector-shaped block secured in a pump housing.

The invention is hereinafter described with reference to the accompanying drawings, in which—

Figure 1 is a section through one form of pump according to the invention, taken on the line 1—1 of Figure 2;

Figure 2 is a further section on the line 2—2 of Figure 1;

Figures 3, 4 and 5 are detail views showing the arrangement of the shoes and retaining rings employed in Figures 1 and 2 for connecting the plungers to the driving eccentric, Figure 3 being a fragmentary radial section of the pump on the axis of one plunger, Figure 4 an end elevation of the parts, and Figure 5 a section on the line 5—5 of Figure 3;

Figures 6 and 7 are detail views corresponding to Figures 3 and 4 of another arrangement of the shoes and retaining rings;

Figures 8 and 9 are similar views of a further arrangement of these parts; and

Figures 10 and 11 are views corresponding to Figures 1 and 2 of a modified form of pump.

The pump shown in Figures 1 to 5 comprises a cylinder block 20 in the form of a ring of rectangular cross-section bored radially to form the cylinders 21, and mounted within a housing 22 closed by an end cap 23, the housing 22 and cap 23 being secured together as by bolts. The cylinders 21 extend right through the block 20, and are closed at their outer ends by a ring 24 shrunk on to the peripheral surface of the block 20. A shaft 25 journalled in the housing and end cap is formed with an eccentric 26 surrounded by a driving sleeve 27, needle rollers 28 being disposed between the eccentric and the sleeve, and being retained against axial movement by collars 30, 31 formed on the eccentric 26. Each of the pump plungers 32, of which three are shown, is formed at its inner end with a transverse groove 33 (Figure 5), of cylindrical form, the arc represented by a cross-section of the groove being substantially greater than a semi-circle. In this groove is mounted a cylindrical pin 34 projecting beyond the ends of the groove. A shoe 35 of arcuate form having its concave surface 36 shaped to the curvature of the driving sleeve 27 has across its outer surface a part-cylindrical groove 37 to receive the pin 34, and perpendicular to the groove 37 is a second groove 38 to receive the end of the plunger embracing the pin. The ends of the pin 34 are cut away as at 40 to substantially semi-cylindrical form, the diametral surface so formed being curved to correspond to the curvature of the outer surface of the shoe 35, and retaining rings 41 are fitted over the shoes 35 and pins 34, one on each side of the plungers, the rings maintaining the shoes in contact with the driving sleeve 27, and the pins 34 in the grooves 37 of the shoes 35. Owing to the form of the grooves 33, the plungers 32 are constrained to follow the movement of the

pins 34 as the latter are moved in and out by the rotation of the eccentric, the plungers being capable of rocking on the pins. Ports 42 in the cylinder walls which lead into radial passages 43 themselves leading to a central space 44 in the pump body connected by passages 45 to an inlet opening 46 in the end cap 23 of the pump, serve for the admission of fluid to the pump cylinders, these ports being opened by the pump plungers when the latter reach the inner ends of their strokes. At the outer end of each cylinder there is formed a recess or pocket 47 in the cylinder block 20, from which a passage 48 is drilled into the block, to communicate with a further passage 50 parallel to the axis of the block. A registering passage 51 in the end cap 23 leads to a cored annular passage 52 in the end cap, a non-return valve 53 being mounted in each passage 51. An outlet connection 54 communicating with the cored passage 50 is connected by suitable piping to the point at which the liquid delivered by the pump is to be stored or utilised.

Figures 6 and 7 are fragmentary views showing an alternative arrangement of the shoes, pins and retaining rings. In this arrangement, the shoe 35 has an arcuate base 55 from which project a pair of spaced lugs 56 apertured to receive the ends of the pin 57 which is of plain cylindrical form. The retaining rings 58 engage with the base of the shoe which projects beyond the lugs 56 in the form of arcuate flanges 60 to receive the rings.

Figures 8 and 9 show another arrangement of the shoes, pins and retaining rings. In this arrangement, the groove 61 in the plunger end is of non-cylindrical form, and has flat sides converging towards the end face of the plunger. The pin 62 is similarly wedge shaped for an intermediate part of its length, but the ends 63 are cylindrical, the flat sides of the intermediate portion being joined at the narrower side of the wedge by a curved surface continuous with the cylindrical ends. The shoe 64 has a transverse arcuate groove 65 to receive the pin and a second groove 66 perpendicular thereto to accommodate the end of the plunger. The retaining rings 67 engage the cylindrical ends of the pins 62, thus retaining the said pins and the shoes 64 in engagement with the driving sleeve, whilst allowing the pins 62 to rock relatively to the shoes.

In the alternative form of pump shown in Figures 10 and 11, each pump cylinder 70 is formed in a separate sector-shaped block 71, the cylinder being formed by a stopped hole drilled from the inner side of the sector. The sectors, of which three are shown, are clamped by studs 72 and nuts 73 to the end cap 74 of the housing, being located on the inner face of the end cap by lips 75 engaging a step 76 on the face of the end cap. The end cap being made of light metal, a steel ring 77 is inserted in the step 76 to provide better support for the sectors. The sectors 71 are accommodated in a recess 78 in the main pump housing 80 when the pump is assembled, and the drive shaft 81, journalled in the main housing and end cap, is formed with an eccentric 82 in the cross-sectional plane containing the plungers. On this eccentric 82 is mounted, with interposed needle rollers 83, a driving sleeve 84, the pump plungers 85 being slotted at their ends and connected to the driving sleeve by pins 86, shoes 87 and retaining rings 88 similar to those described in connection with Figures 1 and 2. The pump cylinders are provided with inlet ports 90 leading into the recess 78 in the pump housing, these ports 90 being exposed by the pump pistons when the latter reach the inner ends of their strokes. The outlet ports 91 also pass laterally through the walls of the sectors 71, and register with passages 92 in the end cap 74, leading to a cored passage 93 from which the delivery connection 94 is taken. Non-return valves 95 are provided in the passages 92.

Rotation of the driving shaft of the pump causes the plungers to reciprocate in the cylinders, the driving sleeve floating on the needle rollers and tending to rotate about its own centre at a slow rate. As the shoes are free to move circumferentially with respect to the driving sleeve, and the plungers to turn on the pins, the plungers can tilt slightly with respect to the surface of the driving sleeve, and can vary their spacing thereon, which is essential to enable them to perform a simple radial reciprocation with respect to the pump body. Each piston as it reaches the inner end of its stroke opens the inlet port of its cylinder to permit fluid to enter the cylinder, and on its outward stroke forces the fluid past the non-return valve into the cored outlet passage. During the inward stroke the non-return valve is closed, and so a vacuum tends to form in the cylinder, with the result that there is a powerful suction of fluid into the cylinder when the inlet port opens.

It will be understood that any number of pump plungers may be used according to the rate of delivery required from the pump, and that two or more of the cylinder bores may be formed in a single sector of the cylinder block, when the latter is formed in sections as shown in Figures 10 and 11.

The use of open grooves in the plungers to engage the pins by which they are coupled to the driving sleeve, and the arrangement of the shoes and retaining rings enables the space in the centre of the pump to be kept very small, and thus, for a given piston stroke, the external diameter of the pump can also be kept small, which is an important advantage, as the weight of the pump is necessarily greater as its size increases, as well as greater space being required to accommodate it. From both of these aspects the smaller pump is especially advantageous for use in aircraft, where both weight and space must be conserved.

What is claimed is:

1. A pump comprising a driving shaft, a multiplicity of cylinders disposed radially around the driving shaft, plungers in said cylinders, an eccentric on said driving shaft, a driving sleeve turning freely on the eccentric, shoes bearing on the driving sleeve, each shoe having intersecting transverse and circumferential grooves on the outer surface thereof, said transverse grooves being of segmental cross-section and having substantially continuous base surfaces extending entirely across said shoes, a pin lying in the transverse groove of each shoe and resting along its entire length on the base surface of said groove, and retaining rings restraining said pins against radial movement relative to said driving sleeve, the end of a plunger projecting into the circumferential groove of each shoe and being formed with a transverse groove to receive the pin, said groove having its defining walls converging towards the end face of the plunger to retain the plunger on the pin.

2. A pump comprising a driving shaft, a steel ring of substantially rectangular cross-section encircling the driving shaft, a multiplicity of radi-

ally disposed cylinders comprising bores passing through said steel ring, a second ring shrunk on to said steel ring to close the outer ends of the bores, plungers in said cylinders, each plunger having at one end thereof a transverse groove, an eccentric on said driving shaft, a driving sleeve turning freely on the eccentric, shoes bearing on the driving sleeve, said shoes having supporting surfaces extending thereacross, a pin disposed between each shoe and a plunger, each of said pins resting along its whole length on the supporting surface of a shoe, and lying in the transverse groove in the respective plunger end, the walls of each of said grooves converging towards the end face of the plunger, and retaining rings restraining said pins against radial movement relative to said driving sleeve.

3. A pump comprising a driving shaft, a steel ring surrounding said driving shaft and bored through to form a multiplicity of cylinders disposed radially around the driving shaft, a second ring shrunk on to said steel ring to close the outer ends of said bores, a housing enclosing said ring, bearings for the shaft supported in the housing, plungers in said cylinders, each plunger having at one end thereof a transverse groove, an eccentric on said driving shaft, a driving sleeve turning freely on the eccentric, shoes bearing on the driving sleeve, said shoes having supporting surfaces extending thereacross, a pin disposed between each shoe and a plunger, each of said pins resting along its whole length on the supporting surface of a shoe and lying in the transverse groove in the respective plunger end, the walls of each of said grooves converging towards the end face of the plunger, and retaining rings restraining said pins against radial movement relative to said driving sleeve.

4. A pump comprising a housing, a driving shaft journalled in said housing, a plurality of sector-shaped blocks secured in said housing, a pump cylinder formed in each of said blocks and disposed radially with respect to said driving shaft, plungers in said cylinders, each plunger having at one end thereof a transverse groove, an eccentric on said driving shaft, a driving sleeve turning freely on the eccentric, shoes bearing on the driving sleeve, said shoes having supporting surfaces extending thereacross, a pin disposed between each shoe and a plunger, each of said pins resting along its whole length on the supporting surface of a shoe, and lying in the transverse groove in the respective plunger end, the walls of each of said grooves converging towards the end face of the plunger, and retaining rings restraining said pins against radial movement relative to said driving sleeve.

5. A pump comprising a driving shaft, a multiplicity of cylinders disposed radially around said driving shaft, plungers in said cylinders, an eccentric on said driving shaft, a driving sleeve turning freely on the eccentric, shoes bearing on the driving sleeve, said shoes having supporting surfaces extending thereacross, pins extending across said shoes and resting along their whole length on said supporting surfaces, transverse grooves in the ends of said plungers to engage the pins, the defining walls of each groove converging towards the end of the plunger, and retaining rings restraining said pins against outward radial movement relative to said driving sleeve.

6. A pump comprising a driving shaft, a multiplicity of cylinders disposed radially around said driving shaft, plungers in said cylinders, an eccentric on said driving shaft, a driving sleeve turning freely on the eccentric, shoes bearing on the driving sleeve, said shoes having concave arcuate supporting surfaces extending thereacross, cylindrical pins extending across said shoes and resting along their whole length on said supporting surfaces, transverse grooves in the ends of the said plungers to engage the pins, each of said grooves being of cylindrical shape and having a cross-section defining an arc substantially greater than a semi-circle, and retaining rings restraining said pins against radial movement relative to said driving sleeve.

7. A pump comprising a driving shaft, a multiplicity of cylinders disposed radially around said driving shaft, plungers in said cylinders, an eccentric on said driving shaft, a driving sleeve turning freely on the eccentric, shoes bearing on the driving sleeve, said shoes having supporting surfaces extending thereacross, pins extending across said shoes and resting along their whole length on said supporting surfaces, transverse grooves in the ends of said plungers to engage the pins, the defining walls of each groove converging towards the end of the plunger, and retaining rings engaging the end portions of said pins to retain them in position.

8. A pump comprising a driving shaft, a multiplicity of cylinders disposed radially around said driving shaft, plungers in said cylinders, an eccentric on said driving shaft, a driving sleeve turning freely on the eccentric, shoes bearing on the driving sleeve, said shoes having supporting surfaces extending thereacross, pins extending across said shoes and resting along their whole length on said supporting surfaces, transverse grooves in the ends of said plungers to engage the pins, the defining walls of each groove converging towards the end of the plunger, said pins being cut away at their ends to substantially semi-circular form, and retaining rings fitting directly over the cut-away ends of the pins.

9. A pump comprising a driving shaft, a multiplicity of cylinders disposed radially around said driving shaft, plungers in said cylinders, an eccentric on said driving shaft, a driving sleeve turning freely on the eccentric, shoes bearing on the driving sleeve, said shoes having supporting surfaces extending thereacross, pins extending across said shoes and resting along their whole length on said supporting surfaces, transverse grooves in the ends of said plungers to engage the pins, the defining walls of each groove converging towards the end of the plunger, apertured lugs on said shoes to receive the ends of the pins, and retaining rings engaging with said shoes beyond the ends of the pins.

10. A pump comprising a driving shaft, a multiplicity of cylinders disposed radially around said driving shaft, plungers in said cylinders, an eccentric on said driving shaft, a driving sleeve turning freely on the eccentric, a roller bearing between said eccentric and said driving sleeve, shoes bearing on the driving sleeve, said shoes having supporting surfaces extending thereacross, pins extending across said shoes and resting along their whole length on said supporting surfaces, transverse grooves in the ends of said plungers to engage the pins, the defining walls of each groove converging towards the end of the plunger, and retaining rings restraining said pins against outward radial movement relative to said driving sleeve.

GEORGE JOSEPH TRAPP.
FREDERICK DONALD FOOTTIT.