Sept. 16, 1958 N. A. WILSON 2,852,075

ROD SWITCH

Filed Aug. 9, 1957

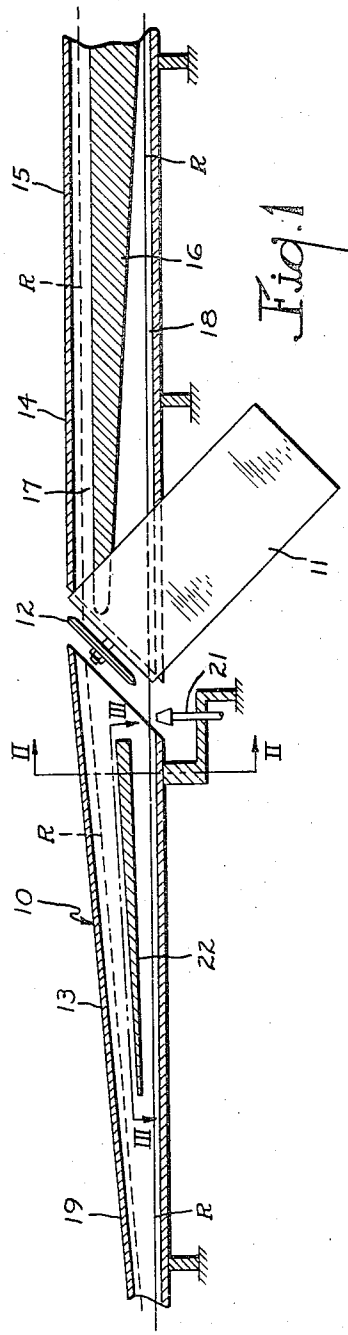

Fig. 1

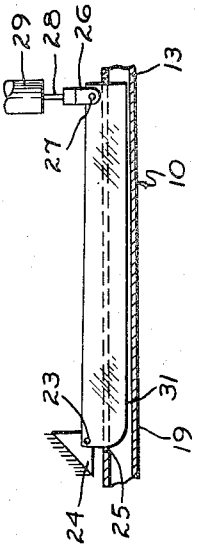

Fig. 3

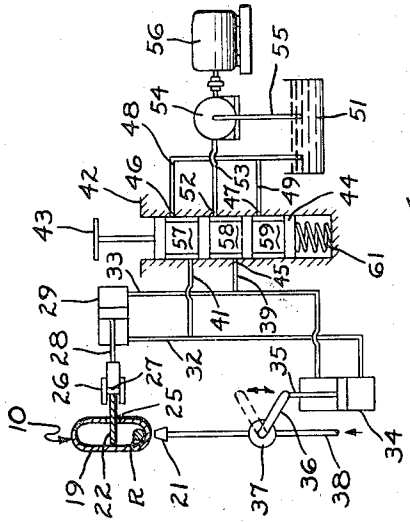

Fig. 2

INVENTOR.
Norman A. Wilson

BY Howard L. Blodgett
Attorney

United States Patent Office

2,852,075

Patented Sept. 16, 1958



2,852,075

# ROD SWITCH

Norman A. Wilson, Westborough, Mass., assignor to Morgan Construction Company, Worcester, Mass., a corporation of Massachusetts

Application August 9, 1957, Serial No. 677,278

7 Claims. (Cl. 164—61)

This invention relates to a rod switch and more particularly to apparatus for use in a rolling mill to deflect a rod from one path to another.

In a rolling mill for producing rod or bar it is usual practice to sever the rod into a number of shorter lengths so that each length may be handled by a cooling bed of a reasonable length. One apparatus commonly employed for this purpose comprises a pair of rotatable vertical cutting discs arranged one above the other at one side of the normal path of travel of the bars and at an oblique angle with the said bar. As each bar approaches the discs it is guided along its normal path of travel by a switch device, which in the usual case provides two upright guide surfaces at opposite sides of the bar. When the bar is to be severed, the switch device is moved laterally to swing the bar into the "bite" of the cutting discs and the bar is cut as it is passed between the discs. As this takes place the bar is given a very sudden lateral movement by the action of the rapidly rotating discs. Since the switch device is moved at a relatively low speed, the tendency is for the laterally moving bar to strike against the rear edge of one of the upright guide surfaces and produce a sharp end or hook in the bar somewhat rearward of the point of severance. This is highly undesirable since a cobble may result from failure of the bent front end to pass through subsequent guides in the rolling mill in the proper manner. This and other difficulties experienced with previously known apparatus has been obviated in a novel manner by the present invention.

It is accordingly one object of the invention to provide a comparatively simple, inexpensive and dependable apparatus for severing metal bars of the like while they are traveling longitudinally at high speed.

It is a further object of the invention to provide a simple and thoroughly reliable shearing apparatus for severing rapidly traveling metal bars by moving them laterally between two rotating discs, the construction being such as to avoid any appreciable bending of the bars.

It is a still further object of the present invention to provide a rod switch which operates to move the rod from one path of motion to another in which the forces acting on the rod are cushioned and no high localized force of sufficient magnitude to damage the rod is present in the apparatus.

Still another object of this invention is the provision of a rod switch having means to restrain the path of the rod to a first direction, the said means being automatically removed when the switching action takes place, thereby preventing damage to the rod.

With these and other objects in view as will be apparent to those skilled in the art, the invention resides in the combination of parts set forth in the specification and covered by the claims appended hereto.

The character of the invention, however, may be best understood by reference to certain of its structural forms as illustrated by the accompanying drawings in which:

Figure 1 is a longitudinal vertical sectional view of apparatus embodying the principles of the present invention,

Figure 2 is a sectional view of the apparatus taken on the line II—II of Figure 1 and in addition showing the hydraulic circuits associated with the apparatus, and

Figure 3 is a sectional view of the invention taken on the line III—III of Figure 1.

Referring first to Figure 1, wherein are best shown the general features of the invention, the switch, indicated generally by the reference **10**, is shown in use in connection with a disc shear **11** of the general type shown and described in the U. S. patent to Morgan No. 2,664,950. In the present case, however, the discs **12** are supported in side-by-side relationship so that a rod is severed by passage vertically therebetween. The switch **10** consists generally of an approach section **13** and a back shear section **14**. The back shear section **14** consists of a housing **15** of generally tubular conformation and a dividing member **16** which serves to separate the housing into an upper path **17** and a lower path **18**. The end of the dividing member **16** which was adjacent the shear **11** is tapered to a rounded point which serves to provide a smooth floor for the upper path **17** and a smoothly curved roof for the lower path **18**.

The approach section **13** is provided with a housing **19** of a generally tubular construction and tapering from a large cross-sectional area adjacent the shear **11** to a cross-section of reduced area at the point of first introduction of the rod thereto. As is evident in Figure 2, the housing **15** and the housing **19** are of ovoid cross-sectional shape, with the long axis extending vertically. The shear **11**, the approach portion **13**, and the back shear portion **15** are all suitably supported on the floor of the mill. It should be noted that the shear blades **12** are inclined at a substantial angle to the horizontal and that the ends of the portions **13** and **14** which reside adjacent the blades are inclined at the same angle in order to permit the blades to be placed closely adjacent thereto without interference. In the case of the approach portion **13** the angular conformation of the end thereof which is adjacent the blades **12** results in a hooded effect and under this hood resides a nozzle **21**. Midway between the upper and lower part of the approach portion **13** is a divider **22**, the edge of which is provided with a sharp edge in the portion thereof which is away from the shear **11**.

Referring now to Figure 3, it can be seen that the divider **22** is pivotally attached at its approach end by means of a pin **23** to an abutment **24** which is suitably attached to the mill foundation. The housing **19** of the approach portion **13** of the switch is provided with a horizontal longitudinal slot **25** which is adapted to closely embrace the divider **22** which is of a plate-like construction. The end of the divider **22** which is the closest to the shear **11** is attached to a clevis **26** by means of a pivot pin **27** and the outer end of the clevis **26** is connected to the piston rod **28** of a hydraulic linear actuator **29**. The portion of the divider which lies within the housing **19** and which is remote from the shear **11** is formed with a curved edge **31**, thus permitting the entire divider to lie outside the housing when pivoted about the pivot pin **23** by means of the linear actuator **29**. This same edge **31** is provided with a knife edge, as has been stated above.

Referring now to Figure 2, wherein is shown the control circuits associated with the switch, it can be seen that the hydraulic linear actuator **29** which acts to move the divider **22** in and out of the housing **19** has a hydraulic conduit **32** attached to one end and a conduit **33** attached to the other end. The conduit **33** is also attached to one end of a hydraulic linear actuator **34** whose piston rod **35** is pivotally attached to the actuating handle **36** of a shut off valve **37**. The valve **37** lies in a water conduit **38** lead-

ing to the nozzle 21 and is so constructed that, when the handle is in the lower position shown in solid lines in the figure, no water is permitted to flow to the nozzle 21. The conduit 32 is connected at its other end to other end of the linear actuator 34. The central portion of the conduit 33 is connected by a conduit 39 to a port 41 of a control valve 42 having a handle 43. The handle 43 extends from the valve and is directly connected to the valve spool 44. The intermediate portion of the conduit 33 is connected to another port 45 of the valve 42. The valve 42 is provided with ports 46 and 47 which are connected by conduits 48 and 49 respectively to a sump tank 51. The valve 42 is also provided with a port 52 which is connected by a conduit 53 to the output of a pump 54 whose input is connected through a conduit 55 to the sump 51. The pump 54 is driven by an electric motor 56.

Returning to the valve 42, it will be observed that the valve spool is provided with reduced portions 57, 58, and 59 and is normally biased to an upper position by means of a coil spring 61. In its upper position the reduced portions 57, 58 and 59 and the ports 41, 45, 46, 47 and 52 are located in such a manner that the port 52 which contains the high pressure oil from the pump 54 is in communication through the reduced portion 58 with the port 45 leading through the conduit 32 to one end of the linear actuators 29 and 34. When the handle 43 is depressed against the resistance of the spring 61 the valve spool 44 moves to a position in which the reduced portion 57 serves to communicate to connect in communication the port 52 with the port 41 which acts through the conduits 39 and 33 to apply hydraulic pressure to the other end of the linear actuators 29 and 34. In the upper position of the valve spool 44 the port 41 is in communication through the reduced portion 57 with the port 46 leading to the sump while in the lower position of the valve spool 44 the port 45 is in communication through the reduced portion 58 with the sump 51.

The operation of the apparatus of the invention will now be readily understood in view of the above description. A rod R enters the switch after leaving the last stand of a rolling mill or the like. It will be understood that the output of the switch is to either a cooling bed or a plurality of reels. In any case, the rod must be severed in at least two pieces in order that the length may be accommodated by a reel. In any case, the discs 12 of the shear 11 are rotating in the usual manner and the motor 56 is actuating the pump 54 to provide high pressure fluid. In this condition the high pressure fluid acts through the conduit 53 and the port 52 to pass through the reduced portion 58 into the port 45, the conduit 33, to actuate the linear actuator 29 to maintain the divider 22 across the housing 19 of the switch. At the same time the high pressure fluid in the conduit 33 acts on the linear actuator 34 to maintain the valve 37 in such condition that no water flows to nozzle 21, the rod R enters the approach portion 13 of the switch and, as is shown in solid lines in Figure 1, lies against the bottom thereof. After passing under the blades 12 of the shear 11, the rod enters the back shear portion 14 lying in the bottom of the housing 15 in the space between it and the dividing member 16, this being the lower path 18. When half of the rod has passed the shear 11 the operator presses down on the handle 43. This action, of course, may take place automatically through the well known signal flag and automatic control apparatus if so desired. As the valve spool 44 moves downwardly the high pressure fluid in the port 52 makes itself felt through the reduced portion 57, the port 41 and the conduit 32 in the other end of the linear actuators 29 and 34. When this high pressure fluid pressure appears in the left side of the linear actuator 29 it acts through the piston rod 28 and the clevis 26 to move the divider 22 through the slot 25 and housing 19 entirely out of the switch. At the same time this is happening the high pressure fluid makes itself felt on the lower end of the linear actuator 34, thus acting through the piston rod 35 and the actuating arm 36 of the valve 37 to place the



valve 37 in condition that water flows to the nozzle 21. The size of the conduit 38 leading to the nozzle 21, the nature of the nozzle 21 and the water pressure contained therein are selected in such a manner as to give a stream of very great force directed upwardly against the rod R. When the stream of water strikes the rod R it moves upwardly between the discs 12 of the shear 11. The nature of the discs is such that rotating toward one another they instantly snatch the rod R and move it upwardly between the discs. Since the divider 22 no longer lies within the housing 19 the rod is permitted to move between the discs and upwardly in the housing 19. The forward motion of the rod is such that the forward end of the rear half of the rod enters the upper path 17 above the dividing member 16 in the back shear portion 15, while the front half of the rod continues onwardly on the lower path 18. The path taken by the rear half of the rod after severance by the shear 11 is shown in dotted lines.

It can be seen then that at the instant when the water from the nozzle 21 strikes the rod R the divider 22 has been removed from the housing, thus permitting the rod to be thrown upwardly through the blades of the disc shear without striking any surface which will cause a bend in the rod; thus the rearward half of the rod is provided with a perfectly straight end and should cause no cobbles or difficulties in following parts of the mill.

It is obvious that minor changes may be made in the form and construction of the invention without departing from the material spirit thereof. It is not, however, desired to confine the invention to the exact form herein shown and described, but it is desired to include all such as properly come within the scope claimed.

The invention having been best described what is claimed as new and desired to secure by Letters Patent is:

1. A rod switch for use with a shear, comprising a housing located to enclose a length of rod as it approaches the shear, a divider movable from a first position within the housing to a second position outside the housing, a nozzle directed toward the rod as it passes through the housing, means for supplying the nozzle on occasion with fluid for forming a stream of considerable force, the said stream serving to move the rod into operative relationship to the shear, and means for simultaneously moving the divider from its first position to its second position and for supplying the nozzle with fluid.

2. A rod switch for use with a disc shear, comprising a housing located to enclose a length of rod as it approaches the shear, a divider movable from a first position within the housing to a second position outside the housing, a nozzle directed toward the rod as it passes through the housing, a conduit for supplying the nozzle with water forming a stream of considerable force, a valve for preventing or permitting the flow of water through the conduit to the nozzle, the said stream serving to move the rod between the disc of the shear, and means for simultaneously moving the divider from its first position to its second position and for opening the valve to cause flow of water through the conduit to the nozzle.

3. A rod switch for use with a disc shear, comprising an approach portion including an elongated tubular housing located to enclose a length of rod as it approaches the shear, a longitudinal slot formed in the housing, a divider movable through the slot from a first position within the housing to a second position outside the housing, a nozzle directed toward the rod as it passes through the housing, a conduit for supplying the nozzle with water for forming a stream of considerable force, a valve for controlling the flow of water through the conduit to the nozzle, the said stream serving to move the rod between the discs of the shear, and means for simultaneously moving the divider from its first position to its second position and for opening the valve to cause flow of water through the conduit to the nozzle.

4. A rod switch for use with a disc shear, comprising a housing located to enclose a length of rod as it approaches

the shear, an elongated flat divider pivoted at one end to swing about an axis at a right angle to the general plane of the divider, the said divider being pivotally movable from a first position within the housing to a second position outside the housing, a nozzle directed toward the rod as it passes through the housing, a conduit for supplying the nozzle with water for forming a stream of considerable force, a valve for controlling the flow of water through the conduit to the nozzle, the said stream serving to move the rod between the discs of the shear, and means for simultaneously moving the divider from its first position to its second position and for opening the valve to cause flow of water through the conduit to the nozzle.

5. A rod switch for use with a disc shear, comprising a housing located to enclose a length of rod as it approaches the shear, a divider movable from a first position within the housing to a second position outside the housing, a nozzle directed toward the rod as it passes through the housing, a conduit for supplying the nozzle with water for forming a stream of considerable force, a valve having a handle for controlling the flow of water through the conduit to the nozzle, a hydraulic linear actuator for moving the handle from a valve-open position to a valve-closed position, said stream serving to move the rod between the discs of the shear, and means for simultaneously actuating the linear actuator for moving the divider from its first position to its second position and for opening the valve to cause flow of water through the conduit to the nozzle.

6. A rod switch for use with a disc shear, comprising a housing located to enclose a length of rod as it approaches the shear, a divider mounted for movement from a first position within the housing to a second position outside the housing, a hydraulic linear actuator connected to the divider to bring about the said movement, a nozzle directed toward the rod as it passes through the housing, a conduit for supplying the nozzle with water for forming a stream of considerable force, a valve for controlling the flow of water through the conduit to the nozzle, the said stream serving to move the rod between the discs of the shear, and means for simultaneously actuating the linear actuator and for opening the valve to cause a flow of water through the conduit to the nozzle.



7. A rod switch for use with a disc shear, comprising an approach portion including an elongated tubular housing located to enclose a length of rod as it approaches the shear, a longitudinal slot formed in the housing, an elongated flat divider pivoted at one end to swing about an axis at a right angle to the general plane of the divider, the said divider being thus pivotally removable through the slot from a first position within the housing to a second position outside the housing, a first hydraulic linear actuator connected to the divider to bring about the said movement, a nozzle directed toward the rod as it passes through the housing, a conduit for supplying the nozzle with water for forming a stream of considerable force, a valve having a handle for controlling the flow of water from the conduit to the nozzle, a second hydraulic linear actuator for moving the handle from a valve-open position to a valve-closed position, the said stream serving to move the rod between the discs of the shear, and means for simultaneously actuating the first linear actuator for moving the divider from its first position to its second position and for actuating the second linear actuator for opening the valve to cause flow of water through the conduit to the nozzle.

**References Cited** in the file of this patent

UNITED STATES PATENTS

| | | |
|---|---|---|
| 1,513,070 | Rendleman | Oct. 28, 1924 |
| 2,170,255 | Sheperdson | Aug. 22, 1939 |
| 2,621,734 | Morgan | Dec. 16, 1952 |
| 2,701,016 | Bedson | Feb. 1, 1955 |