PCT WORLD INTELLECTUAL PROPERTY ORGANIZATION
International Bureau

INTERNATIONAL APPLICATION PUBLISHED UNDER THE PATENT COOPERATION TREATY (PCT)

(51) International Patent Classification [3]: A61N 1/36, 1/04; A61M 29/00; A61B 17/22	A1	(11) International Publication Number: WO 82/00768 (43) International Publication Date: 18 March 1982 (18.03.82)

(21) International Application Number: PCT/GB81/00176

(22) International Filing Date: 3 September 1981 (03.09.81)

(31) Priority Application Number: 8028356

(32) Priority Date: 3 September 1980 (03.09.80)

(33) Priority Country: GB

(71) Applicant *(for all designated States except US)*: THE UNIVERSITY COURT OF THE UNIVERSITY OF EDINBURGH [GB/GB]; Old College, South Bridge, Edinburgh EH8 9YL (GB).

(72) Inventors; and
(75) Inventors/Applicants *(for US only)*: TAYLOR, Thomas, Vincent [GB/GB]; Beech Bank, 27 Bloomsbury Lane, Timperley, Altrincham, County of Cheshire (GB). NEILSON, James, M. [GB/GB]; 4 Whitehouse Terrace, Edinburgh, EH9 2EU (GB).

(74) Agents: MARSH, Roy, David et al.; Brewer & Son, 5-9 Quality Court, Chancery Lane, London, WC2A 1HT (GB).

(81) Designated States: DE, DE (Auxiliary utility model), DE (European patent), FR (European patent), GB (European patent), US.

Published
With international search report

(54) Title: THERAPEUTIC DEVICE

(57) Abstract

Apparatus for inducing thrombosis in a blood vessel subjacent a surface (14) of a living human or animal body comprises a therapeutic electrode (15), (21), (22), (2), (24), which is flexible enough to conform to said surface, and means (17) for maintaining the electrode in contact with the surface and for restricting the flow of blood through the blood vessel during induction of thrombosis therein. Direct current is flowed through the electrode as anode and a counter cathode to coagulate the blood in the blood vessel adjacent the anode. The apparatus is useful to treat active oesophageal variceal bleeding, in which application the electrode (15) may have the general form of a Sengstaken-Blakemore oesophageal tamponade tube.

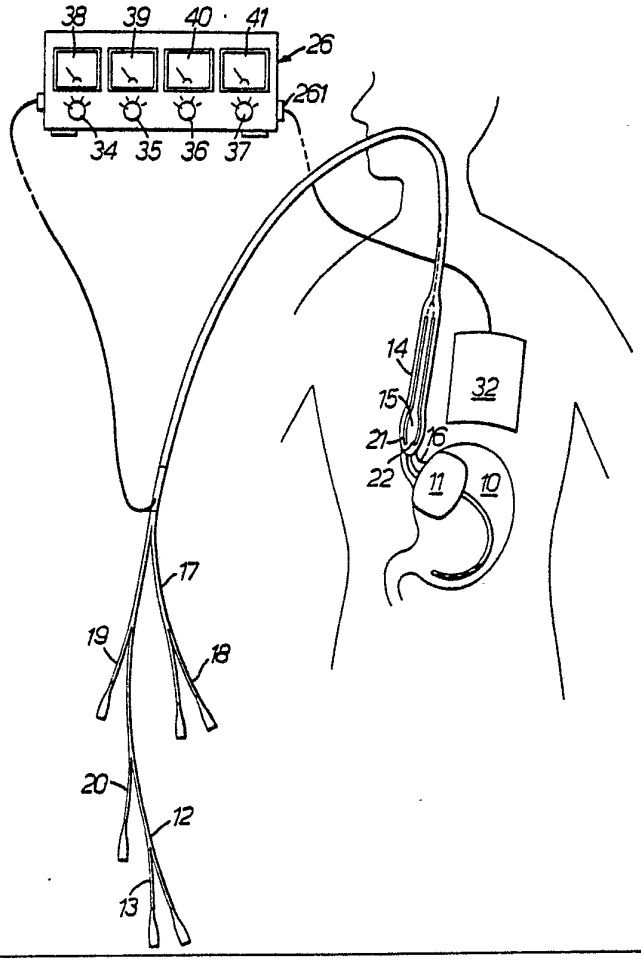

FOR THE PURPOSES OF INFORMATION ONLY

Codes used to identify States party to the PCT on the front pages of pamphlets publishing international applications under the PCT.

AT	Austria	**KP**	Democratic People's Republic of Korea
AU	Australia	**LI**	Liechtenstein
BR	Brazil	**LU**	Luxembourg
CF	Central African Republic	**MC**	Monaco
CG	Congo	**MG**	Madagascar
CH	Switzerland	**MW**	Malawi
CM	Cameroon	**NL**	Netherlands
DE	Germany, Federal Republic of	**NO**	Norway
DK	Denmark	**RO**	Romania
FI	Finland	**SE**	Sweden
FR	France	**SN**	Senegal
GA	Gabon	**SU**	Soviet Union
GB	United Kingdom	**TD**	Chad
HU	Hungary	**TG**	Togo
JP	Japan	**US**	United States of America

THERAPEUTIC DEVICE.

TECHNICAL FIELD.

This invention relates to a therapeutic device and, more particularly, to apparatus for inducing thrombosis in a blood vessel to control haemorrhage or potential bleeding. Haemorrhage or potential bleeding is a problem in many surgical situations, for example, gastro-intestinal tract bleeding, urinary tract bleeding and per- and post-operative bleeding. Specific examples are haemorrhage from varicose veins (varices)of the oesophagus, from the prostatic bed after prostatectomy, from haemorrhoids, from the liver after cholectystectomy (removal of the gall bladder) or liver resection, from operative manipulation and trauma, from aneurysms and from varicose veins other than of the oesophagus. In some cases, the occurrence of acute ailments, for example, varices of the oesophagus, is rapidly increasing, accounting for tens of thousands of fatalities annually.

BACKGROUND ART.

Acute bleeding of oesophageal varices is commonly treated by use of a tamponade tube, such as the Sengstaken-Blakemore tube which was first introduced in 1950, which tube restricts the flow of blood through the vessel, thereby assisting blood coagulation by natural mechanisms. One study has indicated that it will provide initial control of bleeding in over 80% of patients. However, in over 60% of these patients rebleeding will occur when the tube is withdrawn. In the patients who rebleed, there is a 60% rate of mortality.

A number of methods of further treatment are available once bleeding has been arrested. Injection of the

BUREAU OMPI WIPO INTERNATIONAL

varices with a sclerosing agent is feasible only with variceal observation e.g. by an endoscope unobscured by bleeding. Mortalities of around 50% have been found with emergency portasystemic shunting or with gastric or oesophageal surgery. There is a high incidence of rebleeding associated with the use of vasopressin. Thus, none of the methods so far proposed is associated with a high rate of success.

The application of electrical current to induce thrombosis was employed by Lutz in 1951; see Circulation 1951; 3:339-351. Sawyer has demonstrated that passage of current across a normal blood vessel precipitates a thrombus only at the anode; See Amer.J.Physiol. 1960; 198:1006-1010.

DISCLOSURE OF INVENTION.

The present invention has as one object to provide an apparatus which makes possible long-term control of haemorrhage in blood vessels by a non-surgical method, and which is less hazardous to the patient than the methods previously proposed.

According to the present invention there is provided apparatus for inducing thrombosis in a blood vessel subjacent a surface of a living human or animal body, characterised in that it comprises a therapeutic electrode which is flexible enough to conform to said surface, means for maintaining the electrode in contact with the surface and for restricting the flow of blood through the blood vessel during induction of thrombosis therein, the apparatus being provided with leads for electrical connection of the electrode to a source of direct electrical

BUREAU OMPI WIPO INTERNATIONAL

current and so constructed as to support passage of said electrical current through the blood vessel between the therapeutic electrode as anode and a counter cathode for a period of time and at a current density at the surface of the anode sufficient to induce thrombosis in the blood vessel, the anode being non-toxic and resistant to anodic electrochemical dissolution during said period of time.

The means for maintaining the electrode in contact and the means for restricting flow will normally be the same but need not be. The apparatus is totally unlike a diathermy device and does not rely on electrically-generated heat for its effectiveness.

It is an important feature of the invention that it permits treatment of blood vessels during acute bleeding thereof, in distinction from those prior art treatments which can be carried out only after bleeding has been arrested temporarily. With the apparatus of the invention a potential for long-term control is present in the same treatment that provides initial arrest of bleeding. Furthermore, the apparatus may be very useful in preventative methods of treatment where there is a potential for acute bleeding.

Tests have indicated that the likelihood of thrombus formed by use of the apparatus of the invention subsequently moving along the blood circulation system of the patient is acceptably small.

The thrombus may result in complete blockage of an oesophageal varix or other blood vessel and its consequent removal from the blood circulation system.

BUREAU OMPI WIPO INTERNATIONAL

Such an effect has been observed with the use of sclerosing agents and, for treatment of oesophageal varices, is not undesirable. In other situations where use of the apparatus is indicated it is also unlikely to be found undesirable.

Test results of the apparatus to date are limited but give every indication that the apparatus can provide treatment of oesophageal varices which is highly effective. Eight poor risk patients with active oesophageal variceal bleeding were treated. The apparatus used comprised an inflatable oesophageal balloon on the external surface of which were four, longitudinally-extending electrodes which functioned as anodes in use of the apparatus. Post mortem examination of four of these patients confirmed earlier animal experiments and revealed no evidence of dilated submucosal varices. Histological sectioning of the oesophagus showed haemosiderin-laden microphages with evidence of new vessel formation consistent with a previous thrombosis. No cardiac arrythmias were recorded during use of the apparatus.

Gastric varices could be treated by an apparatus according to the invention incorporating a dilatable gastric balloon and these may be treated simultaneously with oesophageal varices. Apparatus in the form of a urethral catheter could enable treatment of bleeding blood vessels in the urethra, and bleeding of a prostatectomy wound site could be arrested by use of an apparatus according to the invention in the form of a bladder catheter. Other treatments of blood vessels beneath the surface of bodily cavities

BUREAU OMPI WIPO INTERNATIONAL

will occur to those skilled in the art, while the apparatus may also find use in the treatment of bodily extremities and organs where the therapeutic electrode has a cavity or aperture to receive the extremity or organ.

BRIEF DESCRIPTION OF DRAWINGS.

For a better understanding of the invention, and to show more clearly how the same may be carried into effect, reference will now be made, by way of example, to the accompanying drawings, in which:-

Fig. 1 shows diagrammatically an apparatus according to the invention, which comprises an oesophageal tamponade tube, inserted within the oesophagus and stomach of a human patient; and

Fig. 2 is a schematic diagram of an electrical circuit which is completed during use of the apparatus.

BEST MODE OF CARRYING OUT THE INVENTION.

The construction of the tamponade tube shown in Fig. 1 has as its basis the construction of a 4-lumen Sengstaken-Blakemore tamponade tube, and as such will be familiar to those skilled in the art.

At the end of the tube which enters the stomach 10 is a distensible latex gastric balloon 11 which is inflated in use by admission of gas to a first lumen 12. This first lumen has a gas pressure monitoring outlet 13.

That part of the tube which is located within the oesophagus 14 has the form of an inflatable, latex oesophageal balloon 15 through which the first lumen 12 passes. The balloon 15 extends to the sphincter

BUREAU OMPI WIPO INTERNATIONAL

16 between the stomach 10 and the oesophagus 14. It is inflated by admission of gas to a second lumen 17 which has a gas monitoring outlet 18. Third 19 and fourth 20 lumens provide means for aspirating the stomach 10 and oesophagus 14.

On the external surface of the oesophageal balloon 15 are four electrodes 21, 22, 23 and 24 (shown more clearly in Fig. 2). Each electrode is a thin strip of silver metal, plated with a layer of gold of thickness 3 microns, and bonded onto the balloon surface by the use of an elastic adhesive composition. The four strip electrodes are equally spaced from one another around the circumference of the balloon 15 and extend longitudinally of the balloon such that a distal end of each electrode is as close as possible to the sphincter 16.

In alternative embodiments the electrodes 21 to 24 may comprise electroconductive areas of the balloon 15 itself, and bleeding of gastric varices might be treatable by the provision of electrodes in analogous fashion on the gastric balloon 11, either in addition to oesophageal electrodes or instead of such electrodes.

An insulated lead 25 (Fig. 2) extends from the electrode 21 along the fourth lumen 20 to a jack plug and socket 261 of electrical equipment 26 associated with the apparatus. Like leads 27,28 and 29 extend from electrodes 22, 23 and 24 respectively through the lumen 20 to the same jack plug 261.

BUREAU OMPI WIPO INTERNATIONAL

In an earlier embodiment, gold plated metal strip electrodes of the same general shape and form as illustrated herein, were secured to the external surface of the balloon 15 by bands of NYLON (trade mark) tape and the ends of the electrode strips buried in an elastic adhesive. The leads 25, 27, 28 and 29 were taped to the external surface of the four lumen assembly of the tamponade tube. Considerable attention is paid, in all embodiments, to the need to minimise additional difficulties of intubation and extubation caused by the presence of the electrodes on the oesophageal balloon.

Turning now to Fig. 2, the electrical equipment 26 comprises a source 30 of electro-motive force and direct electrical current, to the negative pole 31 of which is connected, in use of the apparatus, a flat plate counter cathode 32 which is fitted to the patient in the scapular region. To the positive pole 33 is connected an array of four adjustable resistances 34, 35, 36 and 37 in parallel with one another. Resistance 34 is connected to the electrode 21 via a milliammeter 38, the jack plug 261 and the lead 25. In like manner, resistance 35 is connected to the electrode 22 through a milliammeter 39, resistance 36 to electrode 23 through a milliammeter 40 and resistance 37 to electrode 24 through a milliammeter 41. Although not shown, voltmeters may be provided to monitor the instantaneous voltage across each of the electrodes 21 to 24.

The electrical equipment 26 is shown only schematically. In practice it is likely to be a semiconductor

BUREAU OMPI WIPO INTERNATIONAL

device which constitutes a generator of a constant selected current through each of the electrodes 21 to 24.

In the oesophagus, the electrodes 21 to 24 are likely to be all at different distances from the cathode 32, so that a different voltage is required across each in order to establish the same durrent density at their respective surfaces. With the cathode 32 in the scapular region an even density of current can be achieved around the oesophagus and electrical interference with the heart of the patient is minimised.

Where apparatus according to the invention is to be used to treat bleeding after prostatectomy the cathode could be in the form of a belt around the waist of the patient, in order to provide uniform or near uniform current density at the therapeutic electrode.

In use, the gastric and oesophageal balloons are deflated and the tamponade tube inserted in the usual way. As the electrodes are thin, flexible and narrow, and extend longitudinally of the tube, they do not unduly interfere with this operation. Once the tube is inserted the positions of the electrodes correspond to those of the varices, which themselves run longitudinally of the oesophagus.

The gastric balloon 11 is inflated, by passage into it of a predetermined volume of gas, to secure the oesophageal balloon in position. Then the oesophageal balloon 15 is inflated to a pressure of typically,

BUREAU OMPI WIPO INTERNATIONAL

30 mmHg, which inflation applies physical pressure to the varices as is practised conventionally. Now, however, the electrical equipment 26 is actuated. With a total current of around 80 mA and a voltage of around 7 volts, a current density at the surface of the therapeutic anodes in a range of from 1 to 10 mA/cm² is established and maintained for a long period, typically within a range of from 1 hr to 12 hrs. All the while, the products removed by the aspirating lumens 19 and 20 are examined for evidence of arrest of bleeding. Following treatment of the bleeding varix or varices by physical pressure from the oesophageal balloon to restrict flow of blood therethrough and passage of direct electrical current from the adjacent anode to thrombose the or each varix, the current is switched off, the oesophageal balloon deflated and the patient observed for a further period of some hours for evidence that bleeding has not re-commenced. If all indications are satisfactory, the gastric balloon is deflated and the tamponade tube is gently withdrawn.

BUREAU OMPI WIPO INTERNATIONAL

CLAIMS:

1. Apparatus for inducing thrombosis in a blood vessel subjacent a surface (14) of a living human or animal body, characterised in that it comprises a therapeutic electrode (15,21,22,23 and 24) which is flexible enough to conform to said surface, means (17) for maintaining the electrode in contact with the surface and for restricting the flow of blood through the blood vessel during induction of thrombosis therein, the apparatus being provided with leads (25,27,28 and 29) for electrical connection of the electrode to a source (30) of direct electrical current and so constructed as to support passage of said electrical current through the blood vessel between the therapeutic electrode as anode and a counter cathode (32) for a period of time and at a current density at the surface of the anode sufficient to induce thrombosis in the blood vessel, the anode being non-toxic and resistant to anodic electrochemical dissolution during said period of time.

2. Apparatus as claimed in claim 1 characterised in that the means)17) for maintaining the electrode in contact with the surface is distinct from the means for restricting blood flow.

3. Apparatus as claimed in claim 1 characterised in that the means (17) for maintaining the electrode in contact with the surface is also the means for restricting blood flow.

BUREAU OMPI WIPO INTERNATIONAL

4. Apparatus as claimed in any one of the preceding claims characterised in that the therapeutic electrode has the form of a dilatable fluid enclosure (15) for insertion into a bodily cavity (14), and in that the means (17) for maintaining the electrode in contact with the surface comprises means for flowing a fluid into the enclosure.

5. Apparatus as claimed in claim 4 characterised in that said enclosure is for insertion in an oesophagus of a human patient.

6. Apparatus as claimed in claim 5 characterised in that said enclosure comprises an oesophageal tamponade tube (17) having from one to six therapeutic electrode strips (21,22,23 and 24) running lengthwise of the tube and extending to the region of the oesophago-gastric junction (16) in use of the tube.

7. Apparatus as claimed in claim 4 characterised in that said apparatus comprises a bladder catheter and said enclosure is for location in a prostatectomy cavity.

8. Apparatus as claimed in any one of the preceding claims characterised in that said therapeutic electrode (15,21,22,23 and 24) is composed wholly, or in part, of an electro-conductive plastics material.

9. Apparatus as claimed in claim 8 characterised in that said plastics material comprises an electrically insulating matrix filled with a multitude of mutually-contacting metallic particles.

BUREAU OMPI WIPO INTERNATIONAL

10. Apparatus as claimed in any one of the preceding claims characterised in that said therapeutic electrode (15,21,22,23 and 24) comprises an electrically insulating, flexible substrate (15) which carries at least two electrode elements (21,22,23 and 24).

11. Apparatus as claimed in any one of the preceding claims characterised by a current generator to permit selection of an electrical current from within at least part of a range of from 1 to 10 mA and a voltage from within at least part of a range of from 1 to 10 v, and to flow said selected current through the therapeutic electrode or each electrode element thereof.

12. Apparatus as claimed in claim 11 characterised by means tc monitor the current which is flowing in use of the therapeutic electrode and automatically to maintain constant the flow of current through the electrode or through each element thereof.

BUREAU OMPI WIPO INTERNATIONAL

1/2

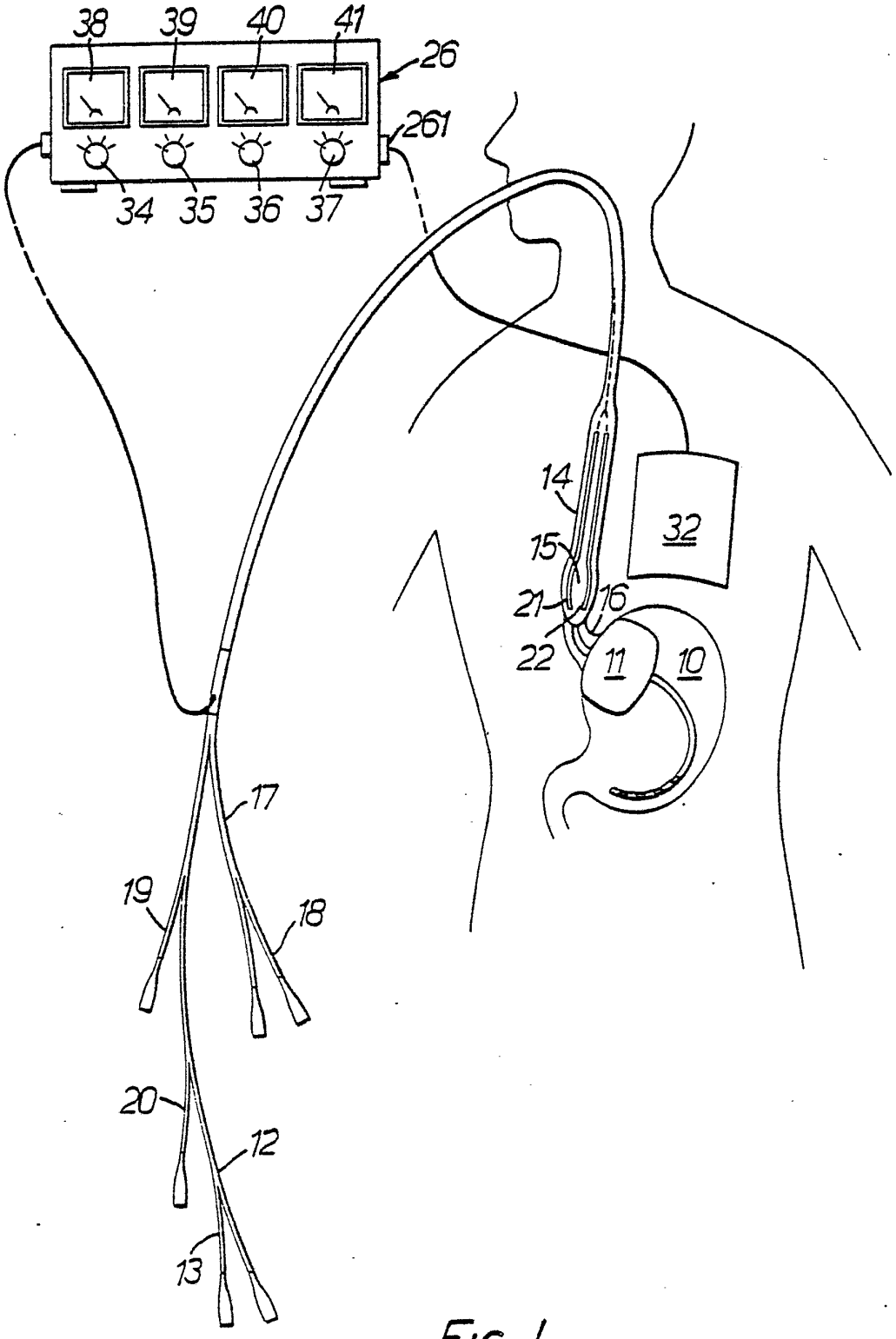

FIG. 1.

BUREAU OMPI WIPO INTERNATIONAL

2/2

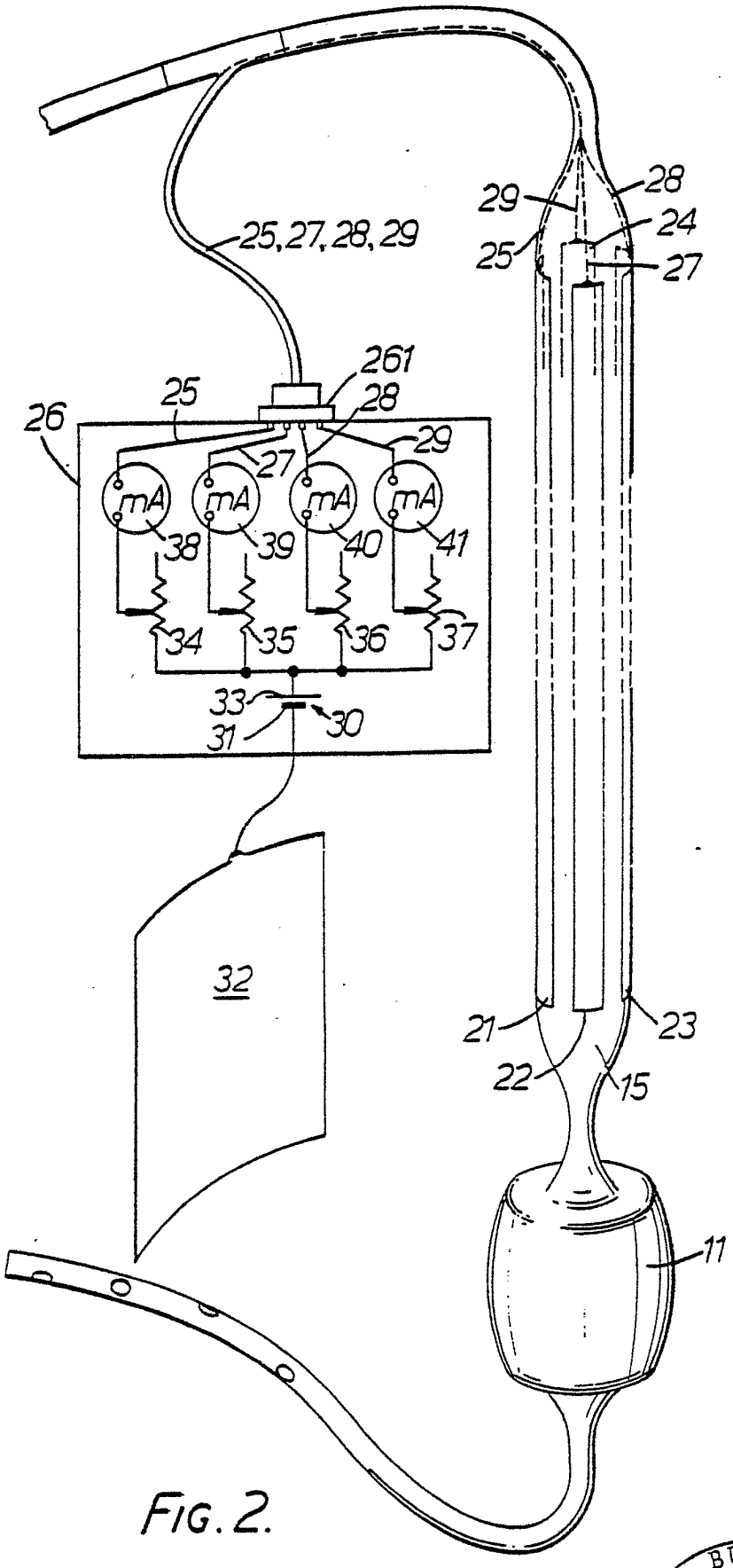

FIG. 2.

BUREAU OMPI WIPO INTERNATIONAL

INTERNATIONAL SEARCH REPORT

International Application No PCT/GB 81/00176

I. CLASSIFICATION OF SUBJECT MATTER (if several classification symbols apply, indicate all) [3]

According to International Patent Classification (IPC) or to both National Classification and IPC

Int.Cl.[3]: A 61 N 1/36; A 61 N 1/04; A 61 M 29/00; A 61 B 17/22

II. FIELDS SEARCHED

Minimum Documentation Searched [4]

Classification System	Classification Symbols
Int.Cl.[3]:	A 61 N 1/36; A 61 N 1/04; A 61 M 29/00; A 61 M 27/00; A 61 B 17/22; A 61 N 1/20; A 61 F 7/12

Documentation Searched other than Minimum Documentation to the Extent that such Documents are Included in the Fields Searched [5]

III. DOCUMENTS CONSIDERED TO BE RELEVANT [14]

Category *	Citation of Document, [16] with indication, where appropriate, of the relevant passages [17]	Relevant to Claim No. [13]
	FR, A, 1466248, published January 20, 1967 see page 1, left-hand column, paragraphs 2 and 6; page 2, left-hand column, lines 1-7 and 34-40 and right-hand column, lines 1-9; figure 1, Bersac	1,3,4,8,9, 12
	EP, A, 0012122, published June 11, 1980 see page 5, lines 23-35; Gambro	1,3,4,10
	US, A, 3411506, published November 19, 1968 see column 2, lines 33-47 and 59-63; Velasco	1,4,5
	Medical and Biological Engineering, vol. 7, no. 3, published in May 1969, Pergamon Press (Stevenage, GB), L. Schaudinischky "Technical Note, the shape conforming electrode", pages 341 to 343, see page 341, figure 1; page 342, left-hand column, paragraph 2 and right-hand column paragraph 1	1,3,4,10
	US, A, 4124028, published November 7, 1978 see column 3, lines 56,57; column 4,	6 ./.

* Special categories of cited documents: [15]

"A" document defining the general state of the art

"E" earlier document but published on or after the international filing date

"L" document cited for special reason other than those referred to in the other categories

"O" document referring to an oral disclosure, use, exhibition or other means

"P" document published prior to the international filing date but on or after the priority date claimed

"T" later document published on or after the international filing date or priority date and not in conflict with the application, but cited to understand the principle or theory underlying the invention

"X" document of particular relevance

IV. CERTIFICATION

Date of the Actual Completion of the International Search [2]	Date of Mailing of this International Search Report [2]
30th November 1981	16th December 1981

International Searching Authority [1]	Signature of Authorized Officer [20]
EUROPEAN PATENT OFFICE Branch at The Hague P.O.Box 5818 Patentlaan ,2 2280 HV RIJSWIJK (ZH) The Netherlands	G.L.M. Kruydenberg

Form PCT/ISA/210 (second sheet) (October 1977)

III. DOCUMENTS CONSIDERED TO BE RELEVANT (CONTINUED FROM THE SECOND SHEET)

Category *	Citation of Document, [16] with indication, where appropriate, of the relevant passages [17]	Relevant to Claim No [18]
	lines 28-36; figure 1, Gallo --	
	DE, A, 1514356, published December 4, 1969 see page 4, paragraph 1; page 6, paragraph 2; page 8, paragraph 2, Rienmuller --	8-11
	DE, A, 1589021, published September 25, 1969 see page 1, paragraph 1; page 2, paragraph 4; Vettermann ------	11,12