(12) INTERNATIONAL APPLICATION PUBLISHED UNDER THE PATENT COOPERATION TREATY (PCT)

(19) World Intellectual Property Organization
International Bureau

(43) International Publication Date
15 December 2016 (15.12.2016)

WIPO | PCT

(10) International Publication Number
WO 2016/198980 Al

(51) International Patent Classification:
F24J2/52 (2006.01)

(21) International Application Number:
PCT/IB2016/053001

(22) International Filing Date:
23 May 2016 (23.05.2016)

(25) Filing Language: English

(26) Publication Language: English

(30) Priority Data:
2015/04083 8 June 2015 (08.06.2015) ZA

(71) Applicant: **STELLENBOSCH UNIVERSITY** [ZA/ZA]; Admin B, Victoria Street, 7600 Stellenbosch, Western Cape Province (ZA).

(72) Inventors: **LANDMAN, Willem Adolph;** 8 Sonsig Flats, Weidenhof Street, 7600 Stellenbosch (ZA). **LARMUTH, James Nicholas;** 69 Runkel Drive, Steynsrust, 7130 Somerset West (ZA). **KOTZE, Johannes Paulus;** 32 Simonsrust, 7600 Stellenbosch (ZA).

(74) Agents: **VON SEIDELS INTELLECTUAL PROPERTY ATTORNEYS** et al; P O Box 440, Century City, 7446 Cape Town (ZA).

(81) Designated States *(unless otherwise indicated, for every kind of national protection available):* AE, AG, AL, AM, AO, AT, AU, AZ, BA, BB, BG, BH, BN, BR, BW, BY, BZ, CA, CH, CL, CN, CO, CR, CU, CZ, DE, DK, DM, DO, DZ, EC, EE, EG, ES, FI, GB, GD, GE, GH, GM, GT, HN, HR, HU, ID, IL, IN, IR, IS, JP, KE, KG, KN, KP, KR, KZ, LA, LC, LK, LR, LS, LU, LY, MA, MD, ME, MG, MK, MN, MW, MX, MY, MZ, NA, NG, NI, NO, NZ, OM, PA, PE, PG, PH, PL, PT, QA, RO, RS, RU, RW, SA, SC, SD, SE, SG, SK, SL, SM, ST, SV, SY, TH, TJ, TM, TN, TR, TT, TZ, UA, UG, US, UZ, VC, VN, ZA, ZM, ZW.

(84) Designated States *(unless otherwise indicated, for every kind of regional protection available):* ARIPO (BW, GH, GM, KE, LR, LS, MW, MZ, NA, RW, SD, SL, ST, SZ, TZ, UG, ZM, ZW), Eurasian (AM, AZ, BY, KG, KZ, RU, TJ, TM), European (AL, AT, BE, BG, CH, CY, CZ, DE, DK, EE, ES, FI, FR, GB, GR, HR, HU, IE, IS, IT, LT, LU, LV, MC, MK, MT, NL, NO, PL, PT, RO, RS, SE, SI, SK, SM, TR), OAPI (BF, BJ, CF, CG, CI, CM, GA, GN, GQ, GW, KM, ML, MR, NE, SN, TD, TG).

[Continued on nextpage]

(54) Title: TUBULAR PYLON AND HINGE ARRANGEMENT

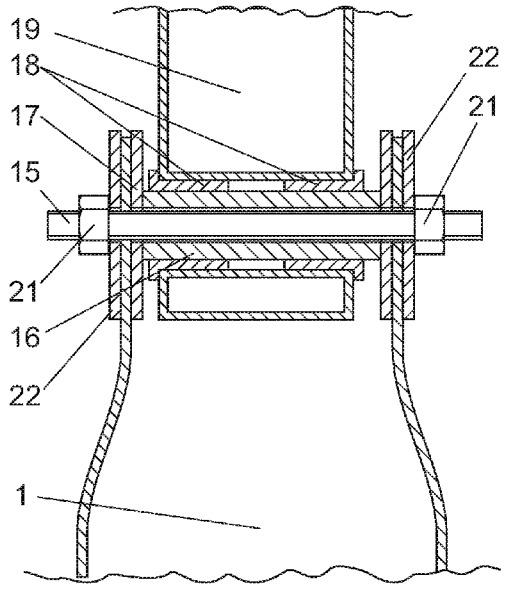

Figure 4

(57) Abstract: A tubular pylon (1) is made of a deformable material with a support end (11) of the pylon (1) being deformed from a generally circular or elliptical cross-sectional shape to a shape in which two diametrically opposite zones of a wall of the end region of the tubular pylon (1) are flattened to form two generally parallel support zones (12) spaced apart from each other. The tubular pylon (1) is preferably a metal pylon of circular shape in cross-section, generally steel. The deformed end region of the tubular pylon may be either generally rectangular shape or oval in shape. The support zones (12) are provided with aligned holes (14) to accommodate a screw threaded or other fastener (15) passing through them and a spacer sleeve (16) encloses a section thereof and maintains a fixed spacing between the generally parallel support zones (12). Preferably, bushings (18) are press fitted to a component (19) to be hinged to the pylon (1) are co-axial with the fastener (15).

WO 2016/198980 A1

Declarations under Rule 4.17:

— *as to applicant's entitlement to apply for and be granted a patent (Rule 4.17(H))*

— *of inventorship (Rule 4.17(iv))*

Published:

— *with international search report (Art. 21(3))*

TUBULAR PYLON AND HINGE ARRANGEMENT

CROSS-REFERENCE(S) TO RELATED APPLICATIONS

This application claims priority from South African provisional patent application number 2015/04083 filed on June 8, 2015, which is incorporated by reference herein.

FIELD OF THE INVENTION

This invention relates to a tubular pylon that may, for example, be used to support items such as a heliostat facet module, a photovoltaic panel, a wind turbine (aerofoil powered generator) or other sun or wind activated machine, or any other item that requires stable support in a particular place especially, although not exclusively, so that the item can track, for example, an energy source such as the sun or wind.

BACKGROUND TO THE INVENTION

Many items of the general nature identified above, and especially a heliostat facet, have the characteristic that it is important for the item to be adjusted in position according to prevailing circumstances. In particular, adjustment of the position of the item may be necessary according to the position of the sun in the instance of solar activated items or according to the direction in which the wind is blowing in the case of a wind turbine or other wind activated machine, so that the energy source is tracked effectively.

In the instance of a heliostat facet for example, the focusing of reflected solar radiation accurately towards a central tower receiver is imperative and consequently the stability of the supporting structure must ensure the necessary accuracy as must the nature of any hinge mechanism and its attachment to the support structure. However, the support structures for heliostat facets in such an application are responsible for an appreciable proportion of the capital expenditure on an entire installation.

In consequence of this, the development of a less costly support structure has been an ongoing challenge and one support structure that has been evolved forms the subject matter of our published international patent application WO2014072905. As shown in Figure 2 that accompanies the present specification, the support structure in that instance provides a single stable pylon for each heliostat facet module and the pylons are arranged, in that instance, in a triangular pattern by means of girders that may be secured to projecting plates welded to the

pylons. Further developments have taken place in this regard and those developments form the subject matter of separate patent applications.

One of the difficulties that applicant has experienced in regard to the single stable pylon support structure is that fairly costly fittings need to be purchased or manufactured for attachment to the upper end of a pylon in order to provide a hinged attachment for a mounting assembly of a solar tracking arrangement.

It is considered that there is appreciable scope for refining tubular pylons of this nature with the objective of decreasing the costs of providing such fittings for attachment to the upper end of a tubular pylon.

The preceding discussion of the background to the invention is intended only to facilitate an understanding of the present invention. It should be appreciated that the discussion is not an acknowledgment or admission that any of the material referred to was part of the common general knowledge in the art as at the priority date of the application.

SUMMARY OF THE INVENTION

In accordance with this invention there is provided a tubular pylon made of a deformable material wherein a support end of the pylon is deformed from a generally circular or elliptical cross-sectional shape to a shape in which two diametrically opposite zones of a wall of the end region of the tubular pylon are flattened to form two generally parallel support zones spaced apart from each other.

Further features of the invention provide for the tubular pylon to be a metal pylon of circular shape in cross-section; for the tubular metal pylon to be made of steel; and for the deformed end region of the tubular pylon to be formed to either a generally rectangular shape in which instance either the longer or the shorter sides of the rectangle may be used as the generally parallel support zones, or a generally oval shape with the two flattened diametrically opposite support zones interconnected by two outwardly bowed end zones of the deformed periphery of the end region of the pylon.

Still further features of the invention provide for each of the generally parallel support zones to be provided with aligned holes to accommodate a screw threaded or other fastener passing through them; for the screw threaded or other fastener to have a spacer sleeve enclosing a section thereof between the generally parallel support zones with the ends of the spacer sleeve engaging, in use, either directly or by way of one or more washers, an inner surface of each of

the support zones so that the spacer sleeve maintains a fixed spacing between the generally parallel support zones; in a first variation of the invention for the spacer to have an accurately machined outer surface cooperating with the inner surface of co-axial accurately machined bushings that may be press fitted into a component to be hinged relative to the spacer sleeve and pylon or, in a second variation of the invention, for separate accurately machined sleeves to be associated with each of the ends of the screw threaded fastener projecting outwards so that they are urged against the outside of each of the generally parallel support zones either directly or by way of one or more washers and wherein each of the separate accurately machined sleeves receives the inner surface of an accurately machined bushing that may be press fitted into a component to be hinged relative to the machined sleeves and pylon.

The invention also provides a tubular pylon as defined above in which at least two axially spaced bushings are mounted on one or more accurately machined sleeves fixed relative to the pylon by way of the screw threaded fastener wherein the axially spaced bushings are associated with a component of a control mechanism that may be a heliostat facet tracking mechanism.

In order that the above and other features of the invention may be more fully understood, one embodiment of the invention will now be described with reference to the accompanying drawings.

BRIEF DESCRIPTION OF THE DRAWINGS

In the drawings:

Figure 1 is a schematic illustration of a heliostat field having a central tower receiver;

Figure 2 is a three-dimensional rear view of heliostat facet modules mounted atop tubular pylons as provided by the present invention for operative tracking of the sun and reflecting solar radiation to the central tower receiver with the pylons being arranged in a triangular arrangement as described in published international patent application WO201 4072905;

Figure 3 is an isometric view of the upper end region of one form of tubular pylon according to the invention in which the deformed end is of basically oval shape;

Figure 4 is a section taken longitudinally along the axis of a fastener and passing in a direction of the centreline "A" of the deformed end of the tubular pylon shown in Figure 3 such that a component hinged to the pylon is located between the two diametrically opposite flattened zones of the wall at the end region of the tubular pylon;

Figure 5 is an isometric view of the upper end region of a second form of tubular pylon according to the invention in which the deformed end is of basically rectangular shape; and,

Figure 6 is a section taken longitudinally along the axis of a fastener passing in a direction of the centreline "B" of the deformed end of the tubular pylon shown in Figure 5 with the component hinged to it straddling the deformed end of the pylon.

DETAILED DESCRIPTION WITH REFERENCE TO THE DRAWINGS

As shown most clearly in Figures 1 and 2, the invention may be applied to supporting tubular pylons (1) of heliostat facet modules (2) that form part of a concentrating solar power plant that receives reflected solar radiation in a central tower (3). As shown in Figure 2, the rear of each heliostat facet module is mounted on a supporting pylon so that, in use, it may be moved about a universal type of pivot assembly (4) by two cooperating linearly extendable and contractible arms (5) in a manner well known in the art in order to track the sun. The linearly extendable arms may be based on linear motors or the like.

The reflective surface of each heliostat facet module is generally spherically concave in the usual way with a long radius of curvature that is, at least in this instance, of the order of twice the slant range being the distance between the facet module and the receiver with the slant range being indicated by the lines (6) in Figure 1. This being so, the positioning of the heliostat facet module is of great importance so that reflected radiation strikes the central tower with sufficient accuracy to avoid any appreciable irradiance spillage. In consequence of this, in the past, rather costly fittings have been applied to the upper ends of the tubular pylons in order to attach the heliostat facet modules to the pylons. The present invention aims to decrease the cost of this situation.

Turning now to the embodiment of the invention that is illustrated in Figures 3 and 4 of the drawings, the tubular pylon (1) is made of a deformable material that in this instance is a suitable steel. In order to conserve costs, a commercially available steel tube of suitable characteristics and cost is preferably selected. The upper support end (11) of the pylon is deformed from its initial circular cross-sectional shape to an elongate oval shape as shown in Figure 3 in which two diametrically opposite zones of the wall of the end region of the tubular pylon are flattened to form two generally parallel support zones (12) spaced apart from each other by the width of the oval. The ends of the oval are, in this instance, simply bowed outwards as indicated by numeral (13).

The generally parallel support zones (12) are provided with aligned holes (14) to accommodate a screw threaded fastener (15) passing through them with a spacer sleeve (16) enclosing a section of the fastener between the generally parallel support zones. The ends of the spacer sleeve engages a washer (17) that in turn engages the inner surface of each of the support zones so that the spacer sleeve maintains a fixed spacing between the generally parallel support zones.

In this variation of the invention the spacer has an accurately machined outer surface cooperating with the inner surface of two accurately machined bushings (18) press fitted into a component (19) thereby hinged relative to the spacer sleeve and thus the pylon. The entire assembly is secured together by nuts (21) on the ends of the screw threaded fastener. Washers (22) substantially the same as the washers (17) are located on the outsides of the generally parallel support zones (12). The entire assembly is thus compressed sufficiently along the axis of the screw threaded fastener, to create sufficient frictional forces to counteract the forces on an associated heliostat facet or other item supported by the pylon and not to allow slippage or movement of those items relative to the pylon.

In either event, the formation of the end region of the tubular pylon can be simply effected by using a mandrel inserted into the tubular and against which the generally parallel support zones can be formed using a press of any suitable description.

It will be understood that consequent on the fact that the component extends into the interior of the deformed end of the tubular pylon freedom to rotate about the accurate machined spacer and cooperating bushings is restricted by the ends of the oval shape of the pylon end. This may or may not be suitable for any particular application and it should also be noted that this variation may be considered to be less stable than the second embodiment of the invention in

which the component actually straddles the outer extremities of the tubular pylon as described below.

Turning now to the embodiment of the invention illustrated in Figures 5 and 6, the deformed end region of the tubular pylon is formed to a generally rectangular shape, as shown clearly in Figure 5. Whilst in this instance an arrangement as described above with respect to the oval shape of the formed end of the tubular pylon is possible, in this particular instance the shorter sides (31) of the rectangular shape are provided with holes (32) for accommodating a screw threaded fastener (33) passing through them. The shorter sides of the rectangle of us are used as the generally parallel support zones in this second variation of the invention.

In this instance the ends of the screw thread of a fastener project through separate accurately machined sleeves (34) located on the outside of the deformed pylon end with each of the machined sleeves receiving an accurately machined bushing (35) press fitted to a component (36) to be hinged to the pylon, typically of a solar tracking mechanism. The bushings are urged against the outside of each of the generally parallel support zones by way of washers (37). It should be noted that an internal spacer sleeve (38) is still necessary in order to prevent collapse of the deformed tubular pylon and to provide the necessary rigidity to the assembly. The entire assembly of components on the screw threaded fastener are urged firmly into engagement with each other by nuts (39) on the ends of the screw threaded fastener.

In each of the embodiments of the invention described above the accurately machined sleeves are held extremely firmly in position relative to the pylon with little possibility of any undesired movement. It should also be noted that alignment of the bushings has built in tolerance because slight misalignments do not create any undue wear on the bushings or accurately machined sleeves mainly because of the rather low duty expected of the components, at least in the application to hinged mountings for heliostat facet modules. With regards to the accuracy of alignment of the bushings, the heliostat facet module application is unique in that the movement of the component relative to the pylon is due to perform only about 10,000 cycles in a 30 year life span. As a result of the fact that such a short required life span insofar as the required number of movements is concerned slight misalignment of the bushings may contribute towards stability and tolerance in the overall hinged joint. The accurate and rigid fitting of the bushings to the component, on the other hand, is very important and to achieve accurate press fitting the receiving holes are generally reamed in order to the achieve the required accuracy.

Numerous variations may be made to the embodiments of the invention described above without departing from the scope hereof.

Throughout the specification and claims unless the contents requires otherwise the word 'comprise' or variations such as 'comprises' or 'comprising' will be understood to imply the inclusion of a stated integer or group of integers but not the exclusion of any other integer or group of integers.

CLAIMS:

1. A tubular pylon made of a deformable material wherein a support end of the pylon is deformed from a generally circular or elliptical cross-sectional shape to a shape in which two diametrically opposite zones of a wall of the end region of the tubular pylon are flattened to form two generally parallel support zones spaced apart from each other.

2. A tubular pylon as claimed in claim 1 in which the tubular pylon is a metal pylon of circular shape in cross-section.

3. A tubular pylon as claimed in either one of claims 1 or 2 in which the tubular metal pylon is made of steel

4. A tubular pylon as claimed in any one of the preceding claims in which the deformed end region of the tubular pylon is formed to either a generally rectangular shape in which instance either the longer or the shorter sides of the rectangle may be used as the generally parallel support zones.

5. A tubular pylon as claimed in any one of claims 1 to 3 in which the deformed end region of the tubular pylon is of a generally oval shape with the two flattened diametrically opposite support zones interconnected by two outwardly bowed end zones of the deformed periphery of the end region of the pylon.

6. A tubular pylon as claimed in any one of the preceding claims in which each of the generally parallel support zones is provided with aligned holes to accommodate a screw threaded or other fastener passing through them.

7. A tubular pylon as claimed in any one of the preceding claims in which the screw threaded or other fastener has a spacer sleeve enclosing a section thereof between the generally parallel support zones with the ends of the spacer sleeve engaging, in use, either directly or by way of one or more washers, an inner surface of each of the support zones so that the spacer sleeve maintains a fixed spacing between the generally parallel support zones.

8. A tubular pylon as claimed in claim 7 in which the spacer has an accurately machined outer surface cooperating with the inner surface of co-axial accurately machined bushings that are press fitted into a component to be hinged relative to the spacer sleeve and pylon.

9. A tubular pylon as claimed in claim 7 in which separate accurately machined sleeves are associated with each of the ends of the screw threaded fastener projecting outwards so that they are urged against the outside of each of the generally parallel support zones either directly or by way of one or more washers and wherein each of the separate accurately machined sleeves receives the inner surface of an accurately machined bushing that is press fitted into a component to be hinged relative to the machined sleeves and pylon.

10. A tubular pylon as claimed in any one of the preceding claims in which at least two axially spaced bushings are mounted on one or more accurately machined sleeves fixed relative to the pylon by way of the screw threaded fastener and wherein the axially spaced bushings are associated with a component of a control mechanism for a heliostat facet tracking mechanism.

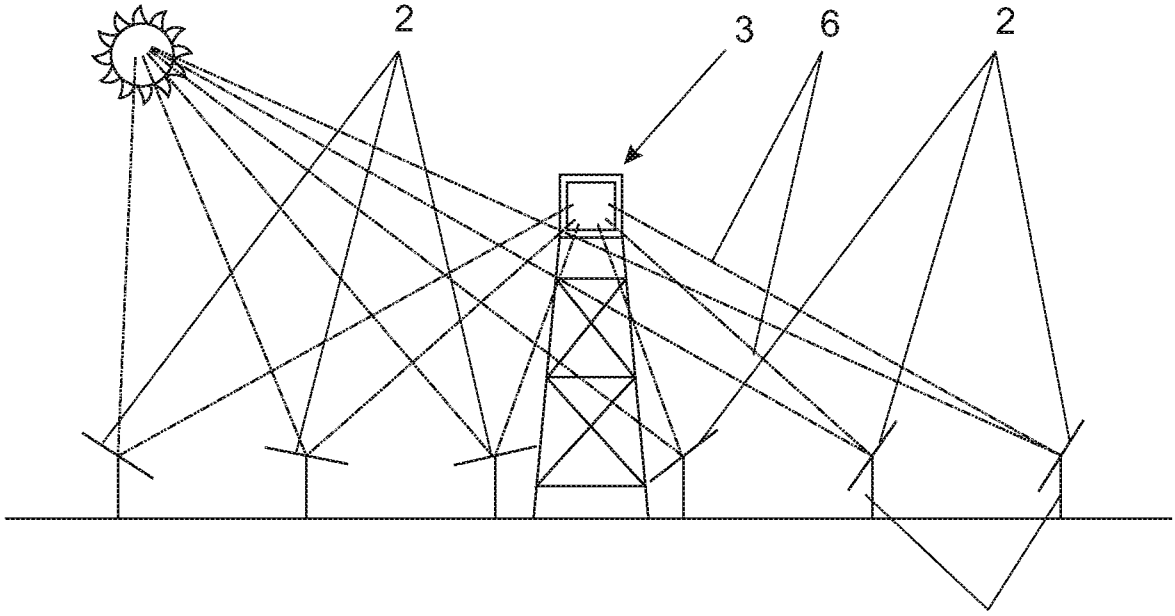

Figure 1

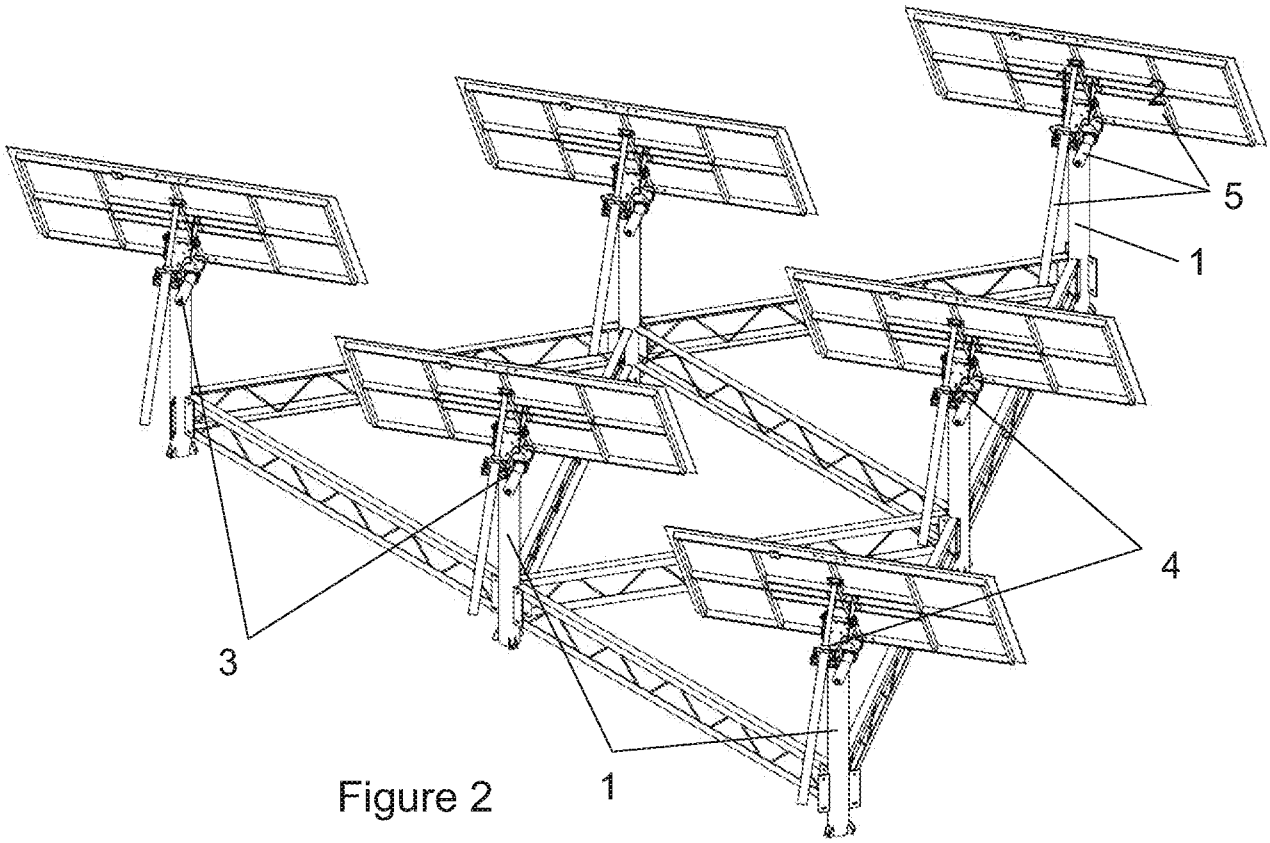

Figure 2

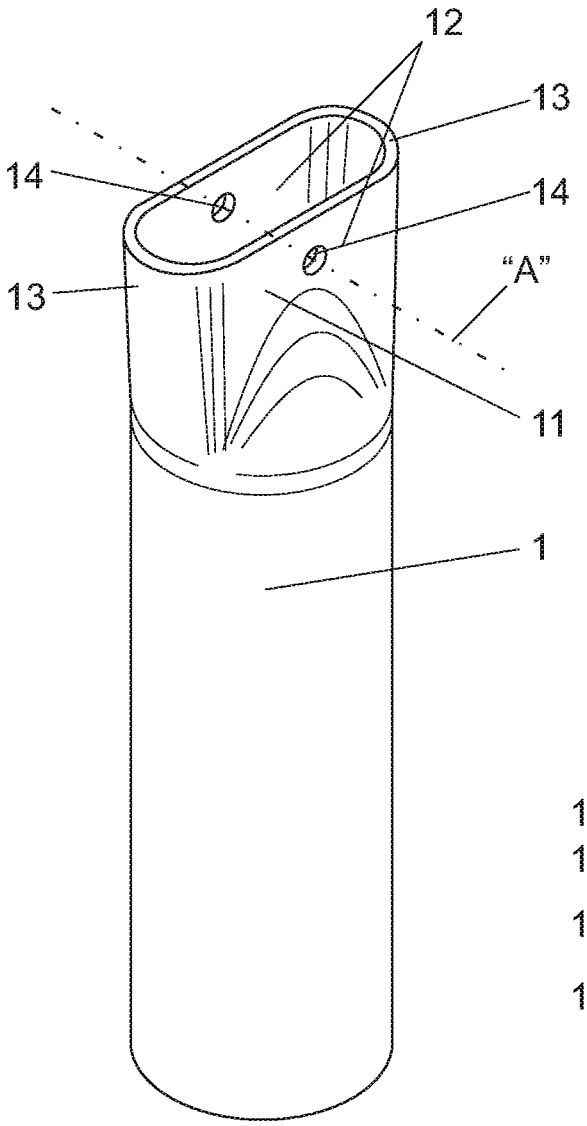

Figure 3

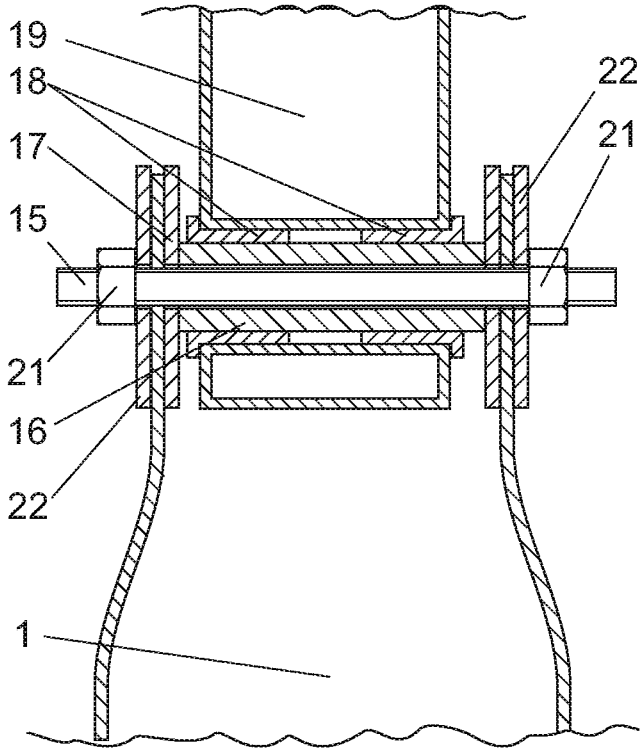

Figure 4

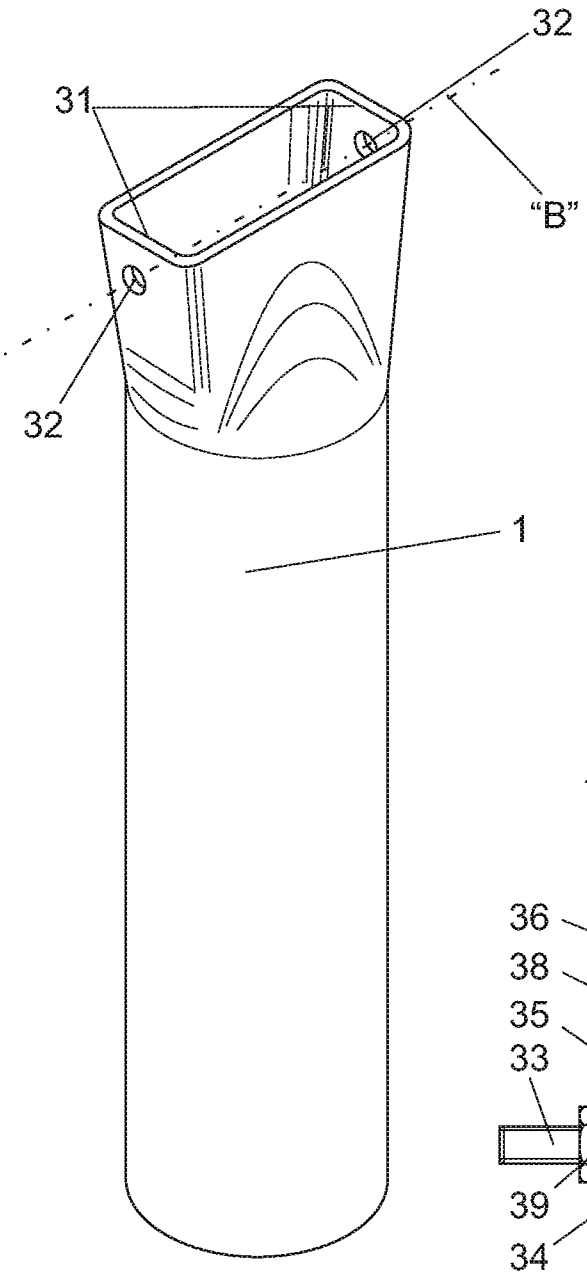

Figure 5

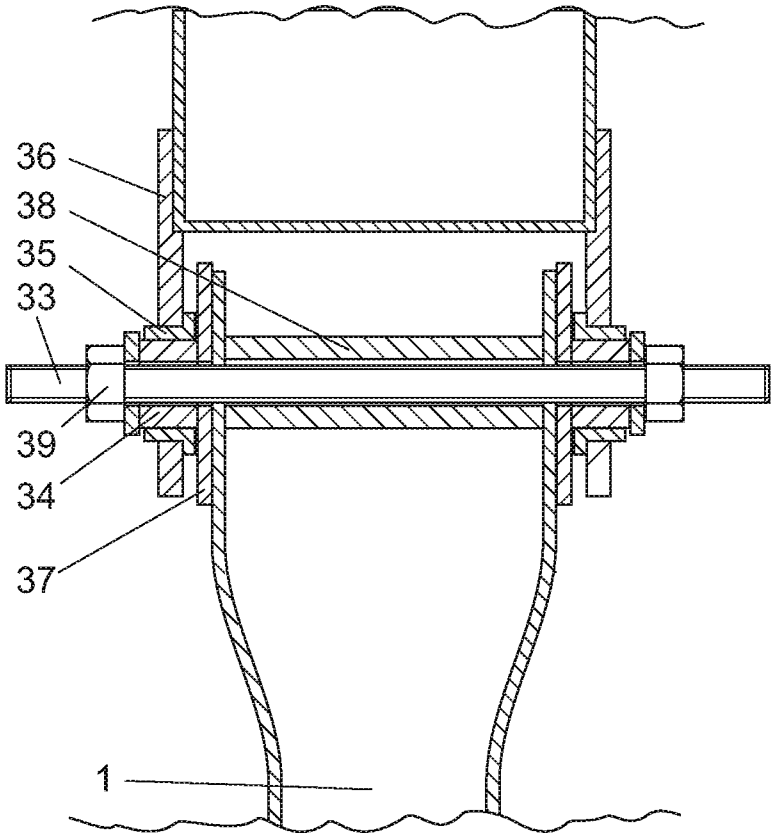

Figure 6

INTERNATIONAL SEARCH REPORT

International application No
PCT/IB2016/053001

A. CLASSIFICATION OF SUBJECT MATTER
INV. F24J2/52
ADD.

According to International Patent Classification (IPC) or to both national classification and IPC

B. FIELDS SEARCHED

Minimum documentation searched (classification system followed by classification symbols)
F24J

Documentation searched other than minimum documentation to the extent that such documents are included in the fields searched

Electronic data base consulted during the international search (name of data base and, where practicable, search terms used)

EPO-Internal , WPI Data

C. DOCUMENTS CONSIDERED TO BE RELEVANT

Category*	Citation of document, with indication, where appropriate, of the relevant passages	Relevant to claim No.
X	US 4 569 685 A (COTTRELL TERENCE B F [GB]) 11 February 1986 (1986-02-11)	1-4
Y	column 3, line 3 - line 10 column 3, line 54 - line 60 column 4, line 20 - line 22; figures 1,2,5 -----	6
X	FR 2 499 174 Al (CORNI LLEAU ETS [FR]) 6 August 1982 (1982-08-06) page 3, line 32 - page 5, line 15; figures 1,2 -----	1,4
X	US 4 187 034 A (DZI EW0LSKI RICHARD [FR]) 5 February 1980 (1980-02-05) column 3, line 33 - column 5, line 57; figures 1,3,5 -----	1,4
	-/- ·	

[X] Further documents are listed in the continuation of Box C.

[X] See patent family annex.

* Special categories of cited documents :

"A" document defining the general state of the art which is not considered to be of particular relevance

"E" earlier application or patent but published on or after the international filing date

"L" documentwhich may throw doubts on priority claim(s) orwhich is cited to establish the publication date of another citation or other special reason (as specified)

"O" document referring to an oral disclosure, use, exhibition or other means

"P" document published prior to the international filing date but later than the priority date claimed

"T" later document published after the international filing date or priority date and not in conflict with the application but cited to understand the principle or theory underlying the invention

"X" document of particular relevance; the claimed invention cannot be considered novel or cannot be considered to involve an inventive step when the document is taken alone

"Y" document of particular relevance; the claimed invention cannot be considered to involve an inventive step when the document is combined with one or more other such documents, such combination being obvious to a person skilled in the art

"&" document member of the same patent family

Date of the actual completion of the international search	Date of mailing of the international search report
5 September 2016	13/09/2016

Name and mailing address of the ISA/	Authorized officer
European Patent Office, P.B. 5818 Patentlaan 2 NL - 2280 HV Rijswijk Tel. (+31-70) 340-2040, Fax: (+31-70) 340-3016	Bel tzung, Franci s

INTERNATIONAL SEARCH REPORT

International application No
PCT/IB2016/053001

C(Continuation). DOCUMENTS CONSIDERED TO BE RELEVANT

Category*	Citation of document, with indication, where appropriate, of the relevant passages	Relevant to claim No.
Y	US 6 201 181 Bl (AZZAM MONEER H [US] ET AL) 13 March 2001 (2001-03-13) column 2, line 38 - column 3, line 9; figures 1-4 -----	6
A	EP 0 853 218 Al (STORK NOLTE INFRATECHNIEK B V [NL]) 15 July 1998 (1998-07-15) column 2, line 22 - column 3, line 30; figures 1,2 -----	1-10
A	WO 2010/105919 A2 (SCHUECO INT KG [DE] ; WEEKE ANDREAS [DE]) 23 September 2010 (2010-09-23) page 3, line 12 - page 7, line 5; figures 1-3B -----	1-10
A	US 2013/334152 Al (THURNER GUENTHER [DE] ET AL) 19 December 2013 (2013-12-19) paragraph [0056] - paragraph [0073] ; figures 1-3 -----	1-10
A	EP 2 388 535 Al (VALK SYSTEMEN BVVD [NL]) 23 November 2011 (2011-11-23) paragraph [0012] - paragraph [0018] ; figures 1-7 -----	1-10
A	US 2008/121273 Al (PLAISTED JOSHUA REED [US] ET AL) 29 May 2008 (2008-05-29) paragraph [0028] - paragraph [0073] ; figures 1-8D -----	1-10
A	FR 2 736 990 Al (S0C D SERVICES DE DISTRIBUTION [FR]) 24 January 1997 (1997-01-24) page 4, line 32 - page 11, line 20; figures 1-6 -----	1-10

INTERNATIONAL SEARCH REPORT

Information on patent family members

International application No
PCT/IB2016/053001

Patent document cited in search report	Publication date	Patent family member(s)	Publication date
US 4569685 A	11-02-1986	AU 545662 B2	25-07-1985
		AU 3049484 A	06-06-1985
		CA 1225042 A	04-08-1987
		DE 3425942 Al	31-01-1985
		FR 2548924 Al	18-01-1985
		GB 2143156 A	06-02-1985
		IN 160529 B	18-07-1987
		IT 1175564 B	01-07-1987
		JP S6333636 Y2	07-09-1988
		JP S60100048 U	08-07-1985
		US 4569685 A	11-02-1986
		ZA 8405033 B	27-03-1985
FR 2499174 Al	06-08-1982	NONE	
US 4187034 A	05-02-1980	BR 7702940 A	10-01-1978
		CA 1092776 A	06-01-1981
		DE 2720029 Al	24-11-1977
		ES 458522 Al	16-08-1978
		GB 1555618 A	14-11-1979
		IT 1081598 B	21-05-1985
		JP S52148914 A	10-12-1977
		NL 7704886 A	08-11-1977
		US 4187034 A	05-02-1980
US 6201181 Bl	13-03-2001	NONE	
EP 0853218 Al	15-07-1998	AT 228230 T	15-12-2002
		DE 69809472 Dl	02-01-2003
		DE 69809472 T2	10-07-2003
		EP 0853218 Al	15-07-1998
		ES 2185110 T3	16-04-2003
		HK 1015022 Al	25-04-2003
		NL 1004973 Al	15-07-1998
		NL 1004973 C2	03-08-1998
Wo 2010105919 A2	23-09-2010	DE 202009001983 Ul	28-05-2009
		EP 2430376 A2	21-03-2012
		W0 2010105919 A2	23-09-2010
US 2013334152 Al	19-12-2013	CA 2817550 Al	01-12-2013
		DE 102013210186 Al	05-12-2013
		US 2013334152 Al	19-12-2013
EP 2388535 Al	23-11-2011	NONE	
US 2008121273 Al	29-05-2008	US 2008121273 Al	29-05-2008
		US 2011173900 Al	21-07-2011
FR 2736990 Al	24-01-1997	NONE	