(12) INTERNATIONAL APPLICATION PUBLISHED UNDER THE PATENT COOPERATION TREATY (PCT)

(19) World Intellectual Property Organization
International Bureau

(43) International Publication Date
16 November 2017 (16.11.2017)

WIPO | PCT

(10) International Publication Number
WO 2017/194926 A1

(51) International Patent Classification:
G01N 1/40 (2006.01)

(21) International Application Number:
PCT/GB2017/051284

(22) International Filing Date:
09 May 2017 (09.05.2017)

(25) Filing Language: English

(26) Publication Language: English

(30) Priority Data:
1608089.7 09 May 2016 (09.05.2016) GB

(71) Applicant: **MARKES INTERNATIONAL LIMITED** [GB/GB]; Gwaun Elai Medi Science Campus, Llantrisant Rhondda Cynon Taff CF72 8XL (GB).

(72) Inventor: **COLE, Martyn Rhys**; C/o Markes International Limited, Gwaun Elai Medi Science Campus, Llantrisant Rhondda Cynon Taff CF72 8XL (GB).

(74) Agent: **URQUHART-DYKES & LORD LLP**; 7th Floor Churchill House, Churchill Way, Cardiff South Glamorgan CF10 2HH (GB).

(81) Designated States *(unless otherwise indicated, for every kind of national protection available)*: AE, AG, AL, AM, AO, AT, AU, AZ, BA, BB, BG, BH, BN, BR, BW, BY, BZ, CA, CH, CL, CN, CO, CR, CU, CZ, DE, DJ, DK, DM, DO, DZ, EC, EE, EG, ES, FI, GB, GD, GE, GH, GM, GT, HN, HR, HU, ID, IL, IN, IR, IS, JP, KE, KG, KH, KN, KP, KR, KW, KZ, LA, LC, LK, LR, LS, LU, LY, MA, MD, ME, MG, MK, MN, MW, MX, MY, MZ, NA, NG, NI, NO, NZ, OM, PA, PE, PG, PH, PL, PT, QA, RO, RS, RU, RW, SA, SC, SD, SE, SG, SK, SL, SM, ST, SV, SY, TH, TJ, TM, TN, TR, TT, TZ, UA, UG, US, UZ, VC, VN, ZA, ZM, ZW.

(84) Designated States *(unless otherwise indicated, for every kind of regional protection available)*: ARIPO (BW, GH, GM, KE, LR, LS, MW, MZ, NA, RW, SD, SL, ST, SZ, TZ, UG, ZM, ZW), Eurasian (AM, AZ, BY, KG, KZ, RU, TJ, TM), European (AL, AT, BE, BG, CH, CY, CZ, DE, DK, EE, ES, FI, FR, GB, GR, HR, HU, IE, IS, IT, LT, LU, LV, MC, MK, MT, NL, NO, PL, PT, RO, RS, SE, SI, SK, SM, TR), OAPI (BF, BJ, CF, CG, CI, CM, GA, GN, GQ, GW, KM, ML, MR, NE, SN, TD, TG).

Published:
— *with international search report (Art. 21(3))*

(54) Title: A SAMPLING APPARATUS

(57) Abstract: A sample probe (10) for sorptive sampling comprises an elongate body (22) having a longitudinal axis defined along its length and a radial axis extending transverse to the longitudinal axis. A sorbent element (24) formed of a sorbent material is secured to the body. The elongate body has an outer surface and a recess (52) located along the length of the body that extends radially into the outer surface. The sorbent element is at least partially received within the recess of the body which mechanically locks the sorbent element to the body to prevent relative longitudinal movement of the sorbent element relative to the body.

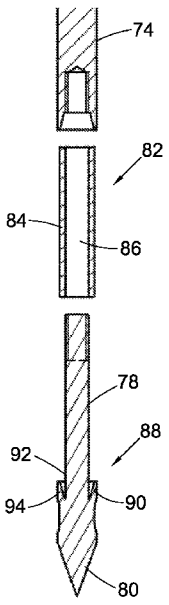

Fig. 4

WO 2017/194926 A1

A SAMPLING APPARATUS

The present invention relates to a sampling probe, and in particular a sampling probe comprising a sorbent substrate for sorbent sampling of liquids and gases.

Sampling techniques are frequently utilised to identify components within a liquid, such as pollutants in drinking water, fragrance allergens in cosmetics or flavour profiling of beverages. The analysis of such samples may involve liquid-liquid extraction (LLE) or solid phase extraction (SPE).

Solid phase extraction may be achieved using Polydimethylsiloxane (PDMS). PDMS extraction is based on adsorption, an equilibrium technique based on the partitioning of analytes between the silicone and the aqueous phases. A sorptive material is placed into a liquid sample, and the sorptive material absorbs the compound of interest contained therein. The quantity of analyte extracted is proportional to its concentration in the sample, providing equilibrium is reached. The amount of analyte extracted is also dependant on the size and hence maximum absorption volume of the analyte material. The extraction into the PDMS can be estimated based on the octanol-water partition coefficient of the analyte (K O/W). The ratio of the PDMS to the sample, known as the phase ratio, becomes an important factor in analyte recovery. The extraction efficiency depends on the mass of solid phase.

PDMS may be used in Solid Phase MicroExtraction (SPME), a known solid phase extraction sampling technique for extracting organic compounds from sample. SPME involves the use of a fibre coated with thin layer of sorptive material, such as PDMS, that forms the extracting phase. The sorptive material may be a solid sorbent selected to extract varying types of analytes from a range of sample media, including both liquid and gas phase. SPME has found widespread use as it is easily automated.

The size of the fibre, coated with the sorbent enables it to be housed within the body of a needle used to pierce the sample vial. Once the needle has been inserted into the vial the fibre is extended out of the needle and introduced into the sample matrix. The needle is then removed and the sample held on the fibre is subsequently desorbed for analysis in a Gas Chromatograph.

However the necessity to fit within a needle, limits SPME to a very thin layer of PDMS (~7-100 Cm). Accordingly the total volume of the recovered compounds is limited, typically in the order of 0.5 CL with K O/W values below 1000 (log K O/W 3). The disadvantage with SPME is therefore a limitation in the amount of adsorbent that can be loaded onto a fibre.

To address the low capacity limitations of SPME sampling, higher capacity sorptive extraction samplers have been developed. Such high capacity samplers include metal probes having a sleeve of PDMS material provide around the probe which is significantly larger than is used in SPME. The larger dimension of the sleeve, and its exposed location on the outer surface of the probe has made such probes susceptible to wear and damage. In use the probes are commonly inserted into a sample vessel having a septa seal, and the probe is required to puncture the septa and/or insert through the septa in a tight fitting manner. The frictional engagement between the sample probe and the septa seal can lead to damage of the sorbent material and removal of the material from the surface. A well as requiring constant replacement or maintenance of the probes, this may also lead to the sample process being compromised.

It is therefore desirable to provide an improved sampling probe for sorbent sampling which addresses the above described problems and/or which offers improvements generally.

According to the present invention there is provided a sampling apparatus and method of sampling as described in the accompanying claims.

In an embodiment of the invention there is provided a sample probe for sorptive sampling comprising an elongate body having a longitudinal axis defined along its length and a radial axis extending transverse to the longitudinal axis. A sorbent element formed of a sorbent material is secured to the body. The elongate body has an outer surface and a recess located along the length of the body that extends radially into the outer surface. The sorbent element is at least partially received within the recess of the body. Locating at least part of the sorbent element within the radial recess mechanically locks the sorbent element to the body to prevent relative longitudinal movement of the sorbent element relative to the body. This advantageously obviates the requirement to rely exclusively on chemical bonding to secure the sorbent element to the body, which has been found to be difficult to achieve, and ensures that the sorbent element is not able to be dragged off the body by a septa or otherwise in use. The term 'sorbent' refers to any substance which has the property of collecting molecules of another substance by sorption. The term sorption covers both absorption and adsorption.

Preferably the sorbent element is received within the recess such that the sorbent material does not extend radially outwards of the recess. This ensures that the sorbent element is flush with or recessed beneath the outer surface, which prevents a sealing element from contacting the sorbent material during insertion and/or retraction of the probe from a sample vessel.

The body of the sampling probe may include a shaft and first and second parts of greater diameter than the shaft located at either end thereof. The sorbent element is a sleeve that is received around the shaft. The term 'sleeve' refers generally to a layer of sorbent material that surrounds the shaft. The sleeve may be an independent component that is able to be inserted onto the shaft. Alternatively the sleeve may be a layer of material that is deposited onto or otherwise formed onto and/or bonded to the shaft.

The enlarged diameter sections have opposing inner ends which face towards the shaft in the longitudinal direction. Each inner face includes a longitudinally extending recess

arranged to receive an end of the sorbent sleeve such that the sleeve is both radially and longitudinally constrained by the enlarged diameter sections. The stepped diameter between the shaft and the enlarged diameter sections defines the recess in which the sorbent element is received.

The recess of each enlarged diameter section includes an inner wall and an outer wall in the radial direction and the ends of the sleeve is located between the inner and outer walls of each recess, thereby radially constraining the sleeve at both ends.

Preferably the sleeve is longitudinally clamped between the first and second enlarged diameter sections.

The sleeve preferably has an outer diameter equal to or less than the diameter of the enlarged diameter sections. In this way the outer surface of the sleeve is located flush with or is recessed radially inwards of the outer surface of the enlarged diameter sections which thereby shield the sleeve.

The recesses of the enlarged diameter sections are preferably annular such that they receive the ends off the sleeve around their entire circumference.

Each longitudinally extending recess of the enlarged diameter sections tapers radially inwards in the longitudinal direction away from the inner face of the enlarged diameter sections. The tapering of the recess provides radial constriction of the end parts of the sleeve between the radial inner and outer walls of the recess to clamp the end parts and create a seal between the enlarged diameter sections and the sleeve. The sealing of the sleeve at either end advantageously prevents liquid ingress into the sleeve between the sleeve and the shaft, which can cause carry over of sample to the next sample and thereby impacts results.

Preferably the inner wall of the recess has a diameter that is continuous with the diameter of the shaft such that the shaft is able to be received within the bore of the sleeve. The outer wall tapers radially inwards towards the inner wall in the longitudinal direction to the base of the recess.

Preferably at least one of the enlarged diameter end sections is releasably connected to the shaft.

Preferably one of the enlarged diameter end sections is secured to the shaft by a threaded connection. The end section includes a threaded bore and the end of the shaft includes a threaded connector section having a cooperating thread at its radially outer surface. The threaded connection allows the shaft to be disconnected from one of the enlarged diameter end sections. This enables the sleeve to be inserted onto the shaft before the shaft is reconnected to the enlarged diameter end section.

The length of the sleeve is selected such that it corresponds to the length of the shaft and both recesses of the end sections, the shaft length not including the length of the threaded connector section. As the shaft is threaded back into the end section the sleeve is longitudinally received within the recesses. The end sections move towards each other as threaded connection continues and the ends of the sleeves are clamped between the two end sections in the longitudinal direction, and between the inner and outer walls of the recesses in the radial direction.

The first enlarged diameter end section preferably includes a tapered tip at its outer, distal end to assist insertion of the probe into a sample vessel. The first enlarged diameter end section and the shaft are preferably integrally formed as a unitary component.

The second enlarged diameter end section includes a connection portion at its distal end, being the opposite end to the inner face, the connection portion being configured to

allow the probe to be connected to by an actuator such as a robotic arm or for manual use.

In another embodiment of the invention the elongate body preferably comprises at least one channel formed in the surface thereof, the channel defining said recess. The sorbent material is provided within the channel such that an outer surface of the sorbent material is exposed. The sorbent material may be moulded, adhered or secured into the channel by any suitable means.

The body of the sample probe has an outer surface and the sorbent material is preferably recessed within the body such that the exposed outer surface of the sorbent material does not extend radially outwards of the outer surface of the body. Keeping the sorbent material flush with or recessed beneath the outer surface of the probe prevents significant contact with the sorbent material.

The body may include at least two longitudinally extending channels arranged on diametrically opposed sides of the body, each channel containing sorbent material.

The channels are preferably longitudinally extending and longitudinally aligned.

The body of the probe may include a tip section and a stem section which are detachably connected and the sorbent material is provided on the tip section. This enables the sorbent material to be periodically replaced through replacement of the tip section without the requirement to replace the entire probe.

The distal end of the tip section may have a first diameter and the proximal end has a second diameter that is preferably greater than the first diameter. A tapered section interconnects the first and second diameter sections, the sorbent material being located on the first diameter section. The majority of the force in piercing and sealing against the septum is therefore borne by the wider diameter section, limiting the shear forces on the tip section.

The shaft may include a further recess arranged to receive a marker element carrying a barcode or other indicia. The recess comprises a region of reduced diameter that ensures the indicia, which is preferably an adhesive strip secured around the circumference of the shaft, does not extend past the outer surface of the shaft preventing the strip from being damages or removed in use.

The present invention will now be described by way of example only with reference to the following illustrative figures in which:

Figure 1 shows a sampling probe according to an embodiment of the invention;

Figure 2 shows a section view of the sampling probe of Figure 1;

Figure 3 shows a section view of a sampling probe according to another embodiment of the invention; and

Figure 4 is an enlarged view of the lower section of the probe of Figure 3.

Referring to Figure 1, the sampling probe 10 includes a stem 18 having an upper stem section 20 and a lower stem section 22. The upper stem section 20 is cylindrical and includes at its upper end 24 a connector portion 26 having a greater diameter than the main shaft of the upper stem section 20. The connector portion 26 includes a circumferentially extending bevelled engagement channel 28 of reduced diameter that is configured to receive a corresponding latching element of a z axis actuator of a robotic arm. The latching element may be a spring loaded ball catch or any other suitable

element that is configured to extend into and engage with the channel 28 to vertically retain the probe 10.

The upper stem section 20 includes a locking section 31. The locking section 31 includes a radially extending shoulder section 36 having a diameter greater than the main body of the upper stem section 20. The shoulder 36 is arranged to receive a latch plate or similar locking element. In use a latch plate is arranged such that when the probe 10 is received at a location where it is required to vertically lock the probe 10 in position, the latch plate is vertically aligned such that the lower surface of the latch plate is vertically aligned with the upper surface of the shoulder 36.

The probe 10 may be received through an aperture in the latch plate. The latch plate is horizontally slidable to a locked position in which at least part of the plate is located above the shoulder 36. When the latch plate is in a locked position the removal of the probe 10 in the vertical direction is prevented by engagement of the shoulder 36 with the latch plate.

As shown in Figure 2, the upper stem section 20 includes an internal channel 39 that includes an internal thread 40 at the base end. The lower stem section 22 includes a corresponding threaded portion 42 that engages with the threaded section 40 of the upper stem section 20 to connect the lower stem section 22 to the upper stem section 20. The upper end 44 of the lower stem section 22 has a diameter consistent with the diameter of the upper stem section 20. The diameter of the lower stem section 22 reduces along its length at tapered section 46 to a reduced diameter lower end 48. At its distal end the lower stem section 22 includes a pointed tip 50 for providing a tapered leading edge to assist insertion through the aperture of the septum of a sample vessel.

The reduced diameter of the lower section 48 allows easy initial insertion of the probe 10 through a septum. The diameter of the lower section 48 is selected such that in use it slides through the opening of a septum relatively easily, with some sealing purchase

between the edge of the aperture and the lower section 48. As the probe 10 is further inserted the tapered section 46 arrives at the septum. The expanding diameter of the tapered section 46 allows transition to a larger diameter section 44 which creates a positive seal with the septum as the probe 10 is further inserted. This enables the probe 10 to seal the sample vessel 2 in a very simple manner without requirement for a more complex arrangement of additional seals on the sample vessel and/or the probe 10. The larger diameter section 44 can also be used to seal the probe 10 within a probe storage and within the oven through engagement of the larger diameter section 44 with an O-ring seal tor similar sealing arrangement.

The lower stem section 22 includes a pair of longitudinally aligned and diametrically opposed grooved sorbent channels 52. The sorbent channels 52 are longitudinally extending and are recessed radially inwardly into the body of the lower stem section 22. The sorbent channels 52 have equal lengths and have a first lower end that is spaced longitudinally inboard from the tapered, pointed tip 50. The upper end of each channel 2 is spaced longitudinally downwards from the tapered section 46. The sorbent channels 52 contain a sorbent material 54 suitable for conducting sorptive sampling. Preferably the sorbent material 54 is Polydimethylsiloxane (PDMS) however other materials as detailed in the claims could foreseeable be used. The dimensions of each channel 52, including length, depth and width, are selected to define the volume of sorbent material 54 contained.

The sorbent material 54 is preferably poured into the channels 52 in a liquid state, with the channels 52 being filled by a set volume with the sorbent material 54 that moulds to the form of the channels 52. The sorbent material 54 sets within the channels 52 with the outer surface of the sorbent material 54 being flush with the outer rim 56 of each channel 52. As such, the surface of the sorbent material 54 is flush with or slightly recessed within the surface of the stem 22. In this way the surface of the sorbent material 54 is protected from abrasion as the lower stem section 22 is inserted through the septum of a sample vessel 2 and retracted there through. Alternatively the sorbent material could be applied

cylindrically to the outer surface similar to prior art however with greater surface thickness and hence volume of material which greatly improves sampling performance.

As the lower stem section 22 is detachable from the stem 20, in the event that there is any degradation in the integrity of the sorbent material 54 over time, the lower stem section 22 may be replaced without the requirement for replacing the whole probe 10

The upper stem section 20 contains a recess 30 for barcoding either by printing, engraving or other. Recessing the barcode minimises abrasion to the barcode during use.

In an alternative embodiment shown in Figure 3 the sample probe 60 comprises an upper stem section 20 and lower stem section 64. The configuration of the upper stem section 20 is the same as the upper stem section 20 described above. The lower stem section 64 includes a threaded portion 66 that engages with a corresponding threaded section 40of the upper stem section 20 to connect the lower stem section 64 to the upper stem section 20. The upper end 70 of the lower stem section 64 has a diameter consistent with the diameter of the upper stem section 20. The diameter of the lower stem section 64 reduces along its length at tapered section 72 to a reduced diameter lower end 74.

The lower end 74 includes a detachable tip section 76. The tip section 76 includes a shaft 78 and a tapered tip 80 at its distal end. A sleeve 82 is provided that is formed of a sorbent material. As shown in Figure 4, the sleeve 82 is substantially cylindrical having a wall section 84 with a bore 86 extending therethrough. The bore 84 has a diameter substantially equal to the diameter of the shaft section 76. The sleeve 82 is therefore configured to fit over and receive the shaft 78 in a closely toleranced fit such there is substantially no gap between the inner surface of the bore 84 and the outer surface of the shaft 78.

The tip 80 is tapered to a point at its distal end for providing a tapered leading edge to assist insertion through the aperture of the septum of a sample vessel. At the inner end

88 the tip 80 includes an annular recess 90 extending longitudinally towards the distal end. The recess 90 has an inner wall 92 that is contiguous with the outer wall of the shaft 78, and an outer wall 94. At the opening of the recess 90 the outer wall 94 is spaced radially outwards from the inner wall 92. The outer wall 94 is angled radially inwards towards the base of the recess 90 such that the recess 90 tapers to its base where the outer wall 94 and inner wall 92 meet.

CLAIMS

1. A sample probe for sorptive sampling comprising:
an elongate body having a longitudinal axis defined along its length and a radial axis extending transverse to the longitudinal axis, the elongate body having an outer surface and a recess located along the length of the body that extends radially into the outer surface; and
a sorbent element formed of a sorbent material;
wherein the sorbent element is least partially received within the recess of the body.

2. A sample probe according to claim 1 wherein the sorbent element is received within the recess such that the sorbent material does not extend radially outwards of the recess.

3. A sample probe according to claim 1 or 2 wherein the body of the sampling probe includes a shaft and first and second enlarged diameter sections at either end of the shaft.

4. A sample probe according to claim 3 wherein the sorbent element is a sleeve that is received around the shaft between the first and second enlarged diameter sections.

5. A sample probe according to claim 4 wherein the enlarged diameter sections have opposing inner ends which face towards the shaft in the longitudinal direction, each inner face including a recess that extends longitudinally into the enlarged diameter sections, the recesses each being arranged to receive an end of the sorbent sleeve such that when the ends of the sleeve are received in the recesses they are radially and longitudinally constrained.

6. A sample probe according to claim 5 wherein the recess of each enlarged diameter section includes radially inner and outer walls and the ends of the sleeve are located between the inner and outer walls of each recess.

7. A sample probe according to claim 7 wherein the sleeve is longitudinally clamped between the first and second enlarged diameter sections.

8. A sample probe according to claim any one of claims 3 to 7 wherein the sleeve has an outer diameter equal to or less than the diameter of the enlarged diameter sections.

9. A sample probe according to claim 8 wherein the recesses of the enlarged diameter sections annular and the diameter of the sleeve is substantially equal to the outer diameter of the recesses, the ends of the sleeve being received within the recesses around their entire circumference.

10. A sample probe according to claim 8 wherein each recess tapers radially inwards in the longitudinal direction away from its opening to its base to clamp and seal with the sleeve.

11. A sample probe according to any one of claims 4 to 10 wherein at least one of the enlarged diameter end sections is releasably connected to the shaft.

12. A sample probe according to claim 11 wherein one of the enlarged diameter end sections is secured to the shaft by a threaded connection, said enlarged diameter end section including a threaded bore and the end of the shaft including a corresponding threaded connector section.

13. A sample probe according to claim 12 wherein the length of the sleeve is selected such that when the enlarged diameter end section is threaded to the shaft the

sleeve is longitudinally clamped by the enlarged diameter end sections at either end of the shaft.

14. A sample probe according to claim 1 wherein the elongate body comprises at least one channel formed in the surface thereof and the sorbent material is provided within the channel such that an outer surface of the sorbent material is exposed.

15. A sample probe according to claim 14 wherein the body of the sample probe has an outer surface and the sorbent material is recessed within the body such that the exposed outer surface of the sorbent material does not extend radially outwards of the outer surface of the body.

16. A sample probe according to claim 15 wherein the body includes at least two longitudinally extending channels arranged on diametrically opposed sides of the body, each channel containing sorbent material.

17. A sample probe according to claim 16 wherein the channels are longitudinally extending and longitudinally aligned.

18. A sample probe according to any one of claims 14 to 17 wherein the body of the probe includes a tip section and a stem section which are detachably connected and the sorbent material is provided on the tip section.

19. A sample probe according to claim 18 wherein the distal end of the tip section has a first diameter and the proximal end has a second diameter greater than the first diameter and a tapered section interconnects the first and second diameter sections, the sorbent material being located on the first diameter section.

20. Device according to any preceding claim, wherein the sorbent material is a material from the group comprising polyethylene glycol, silicone, octadecyltrichlorosilane, polymethylvinyl chlorosilane, liquid-crystalline

polyacrylates, grafted self-organized monomolecular layers, graphene, carbon nanotubes, ionic liquids and inorganic coating materials.

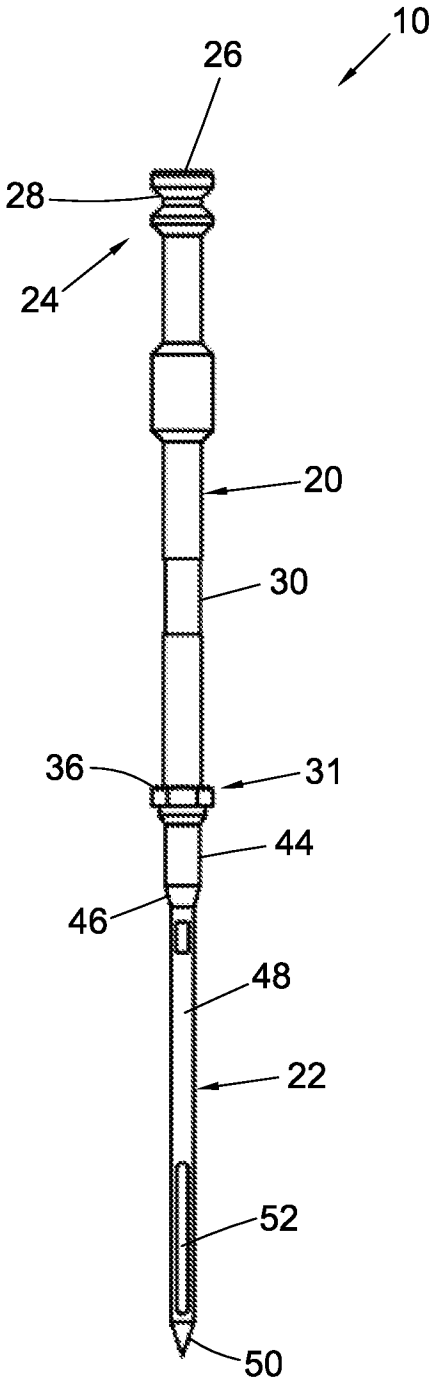
10
26
28
24
20
30
36
31
44
46
48
22
52
50

Fig. 1

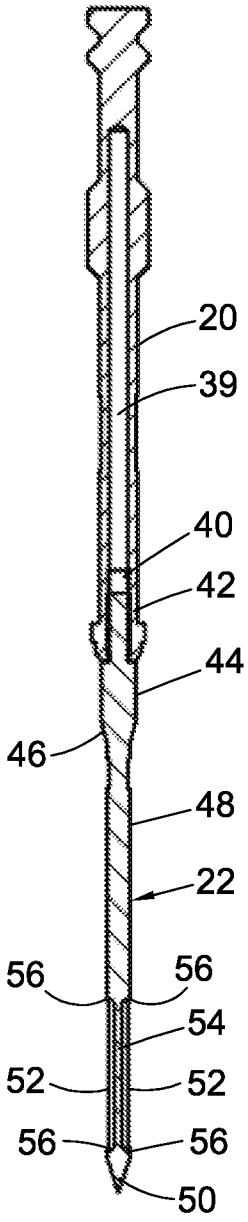
20
39
40
42
44
46
48
22
56
56
54
52
52
56
56
50

Fig. 2

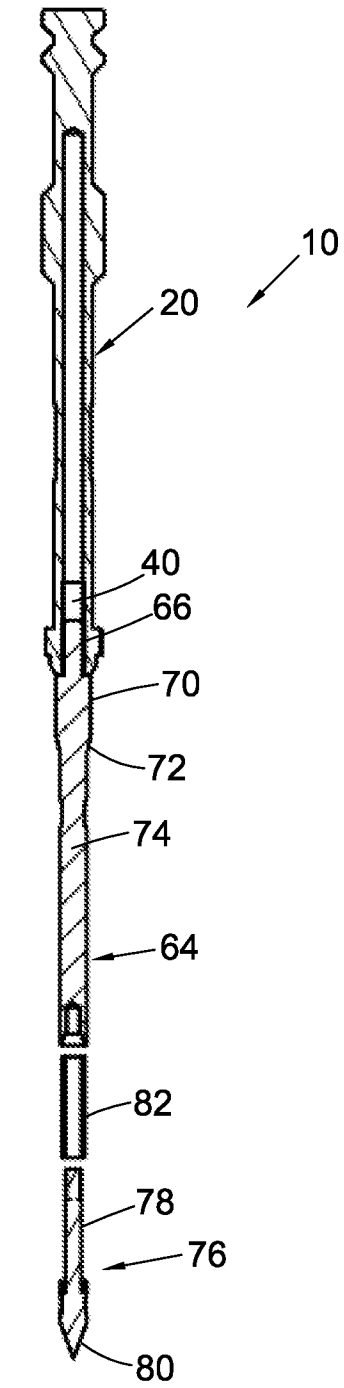

Fig. 3

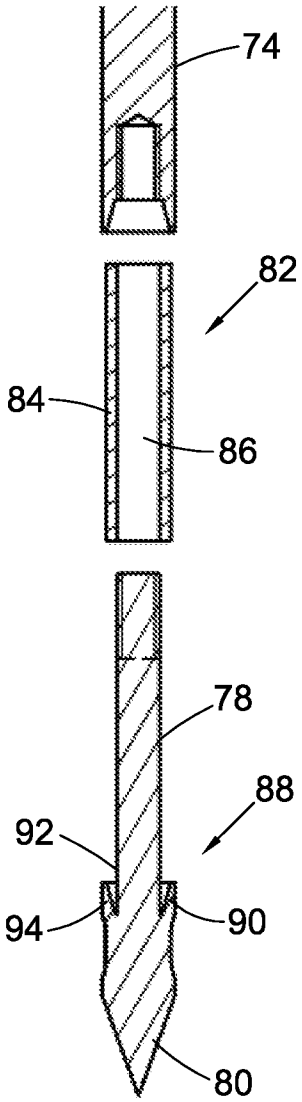

Fig. 4

INTERNATIONAL SEARCH REPORT

International application No
PCT/GB2017/051284

A. CLASSIFICATION OF SUBJECT MATTER
INV. G01N1/40
ADD.

According to International Patent Classification (IPC) or to both national classification and IPC

B. FIELDS SEARCHED

Minimum documentation searched (classification system followed by classification symbols)
G01N

Documentation searched other than minimum documentation to the extent that such documents are included in the fields searched

Electronic data base consulted during the international search (name of data base and, where practicable, search terms used)
EPO-Internal, WPI Data

C. DOCUMENTS CONSIDERED TO BE RELEVANT

Category*	Citation of document, with indication, where appropriate, of the relevant passages	Relevant to claim No.
X Y	US 2007/209453 A1 (AKINBO OLUJIDE T [US] ET AL) 13 September 2007 (2007-09-13) figures 1,3A-3B,4A-4B paragraphs [0005] - [0006], [0021] - [0022], [0024], [0027], [0029] - [0031] -----	1-10, 14-20 11-13
X	WO 2005/043129 A2 (MARKES INT LTD [GB]; COLE ALUN [GB]) 12 May 2005 (2005-05-12) figure 1 page 3, line 25 - page 4, line 5 page 4, line 34 - page 5, line 25 page 8, line 32 - page 9, line 2 -----	1
Y	US 2015/276780 A1 (BREMER RALF [DE] ET AL) 1 October 2015 (2015-10-01) figures 1-2,13-15 paragraphs [0032] - [0037], [0039], [0044] - [0045], [0049] - [0050] -----	11-13

☐ Further documents are listed in the continuation of Box C.

☒ See patent family annex.

* Special categories of cited documents :

"A" document defining the general state of the art which is not considered to be of particular relevance

"E" earlier application or patent but published on or after the international filing date

"L" document which may throw doubts on priority claim(s) or which is cited to establish the publication date of another citation or other special reason (as specified)

"O" document referring to an oral disclosure, use, exhibition or other means

"P" document published prior to the international filing date but later than the priority date claimed

"T" later document published after the international filing date or priority date and not in conflict with the application but cited to understand the principle or theory underlying the invention

"X" document of particular relevance; the claimed invention cannot be considered novel or cannot be considered to involve an inventive step when the document is taken alone

"Y" document of particular relevance; the claimed invention cannot be considered to involve an inventive step when the document is combined with one or more other such documents, such combination being obvious to a person skilled in the art

"&" document member of the same patent family

Date of the actual completion of the international search	Date of mailing of the international search report
3 August 2017	14/08/2017

Name and mailing address of the ISA/	Authorized officer
European Patent Office, P.B. 5818 Patentlaan 2 NL - 2280 HV Rijswijk Tel. (+31-70) 340-2040, Fax: (+31-70) 340-3016	Bockstahl, Frédéric

1

INTERNATIONAL SEARCH REPORT

Information on patent family members

International application No
PCT/GB2017/051284

Patent document cited in search report	Publication date	Patent family member(s)	Publication date
US 2007209453 A1	13-09-2007	NONE	
WO 2005043129 A2	12-05-2005	CN 1886645 A	27-12-2006
		EP 1678477 A2	12-07-2006
		GB 2407868 A	11-05-2005
		JP 4691501 B2	01-06-2011
		JP 2007510142 A	19-04-2007
		US 2007220996 A1	27-09-2007
		WO 2005043129 A2	12-05-2005
US 2015276780 A1	01-10-2015	DE 102014004701 A1	01-10-2015
		EP 2927682 A1	07-10-2015
		JP 2015197444 A	09-11-2015
		US 2015276780 A1	01-10-2015