United States Patent [19]

Baker

[11] **3,819,849**

[45] **June 25, 1974**

[54] **ELECTRICAL CABLE CONNECTING DEVICE**

[75] Inventor: **Robert W. Baker,** Santa Ana, Calif.

[73] Assignee: **Flexible Metal Hose Manufacturing Company,** Costa Mesa, Calif.

[22] Filed: **May 10, 1972**

[21] Appl. No.: **251,965**

[52] **U.S. Cl.** ..... **174/86,** 174/68 C, 174/89, 339/103

[51] **Int. Cl.** **H02g 15/08**

[58] **Field of Search** ..... 174/68 C, 86, 87 R, 88, 174/89, 91, 135, 136; 339/103

[56] **References Cited**

UNITED STATES PATENTS

2,521,822	9/1950	Boswell	174/91 X
2,969,420	1/1961	Gregoire et al.	174/89 X
3,052,748	9/1962	Curtiss	174/91 X
3,116,361	12/1963	Bentz et al.	174/135 X
3,171,707	3/1965	Powell	174/89 X
3,184,706	5/1965	Atkins	174/89 X

OTHER PUBLICATIONS

Rex–Flex Stainless Steel Flexible Tubing, Advertisement Chicago Metal Hose Corp.

Primary Examiner—A. T. Grimley

[57] **ABSTRACT**

An electrical cable connecting device comprising a clamp assembly at one end for attaching thereof to a terminal end portion of an associated electrical cable, an electrical connector adapted to be fixed to the terminal end of such end portion, and a bendable convoluted tubular shell fixed between the assembly and the connector which allows the end portion of the cable to be bent in a self-supporting manner into an infinte number of positions to allow easy mating thereof with an associated electrical connector.

14 Claims, 4 Drawing Figures

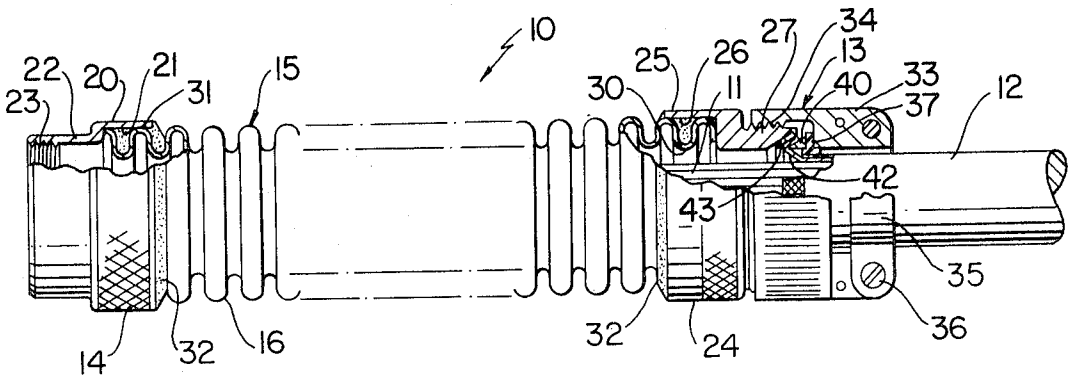

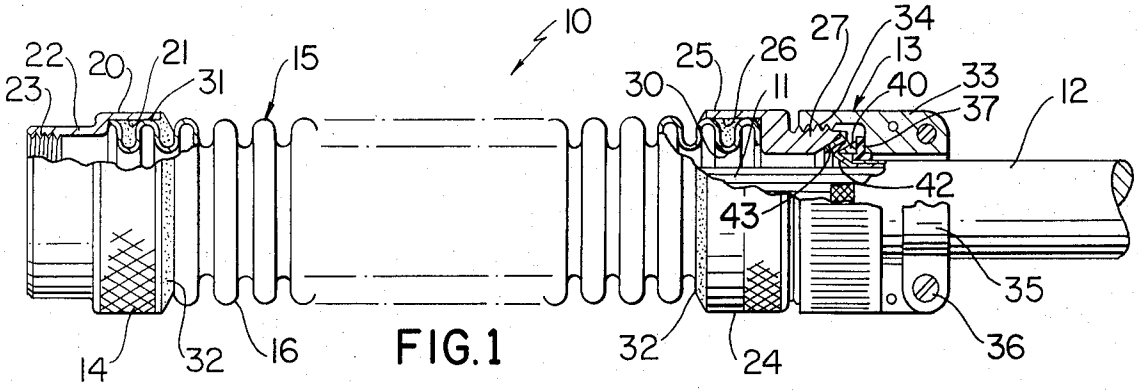

FIG. 1

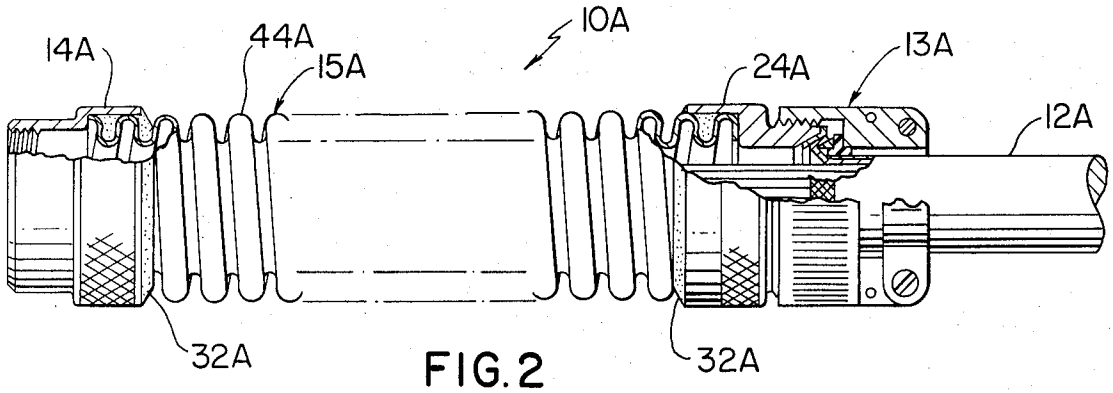

FIG. 2

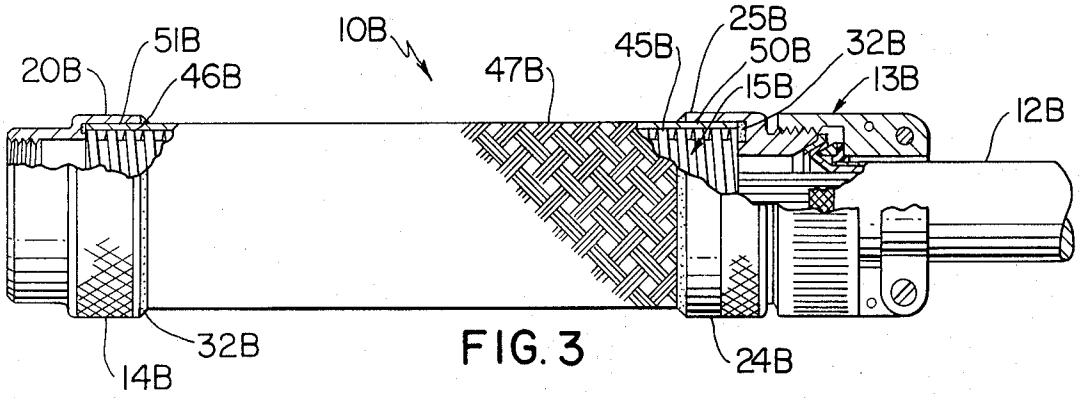

FIG. 3

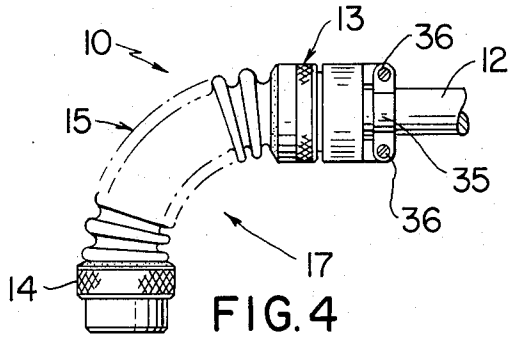

FIG. 4

ELECTRICAL CABLE CONNECTING DEVICE

BACKGROUND OF THE INVENTION

It is common practice in electrical systems to fix electrical connectors to the terminal end portions of electrical cables and quite often it is necessary that such terminal end portions be bent through an angle to allow mating with associated electrical connectors, or the like. Heretofore, the practice has been to provide a preformed rigid shell, usually made of metal, through which the terminal end portion of an associated cable is extended, whereby it has been necessary to design and prefabricate a particular rigid shell for each end portion of a cable which must be bent through a particular angle for mating purposes. In many applications, the configuration of a particular prefabricated shell will not be correct for precision final assembly whereby rather than redesign such shell, pressure is often exerted thereagainst to force it into alignment thereby resulting in excessive loads being applied against cooperating mounting structure or components.

SUMMARY

This invention provides an improved electrical cable connecting device of simple and economical construction comprising a clamp assembly at one end for attaching thereof to a terminal end portion of an associated electrical cable, an electrical connector adapted to be fixed to the terminal end of such end portion, and a bendable convoluted tubular shell fixed between the assembly and the connector which houses the end portion and allows such end portion to be bent into an infinite number of positions to allow easy mating thereof with an associated electrical connector. Once the device is bent, it remains in its bent position with the shell providing the sole means holding such device in position whereby the electrical connector may be easily installed without exerting forces on associated mounting structure.

Other details, uses, and advantages of this invention will be readily apparent from the exemplary embodiments thereof presented in the following specification, claims, and drawing.

BRIEF DESCRIPTION OF THE DRAWING

The accompanying drawing shows present preferred embodiments of this invention, in which

FIG. 1 is a view with parts in cross section and parts broken away illustrating one exemplary embodiment of an electrical cable connecting device connected in position at the terminal end portion of an associated electrical cable;

FIG. 2 is a view similar to FIG. 1 illustrating another exemplary embodiment of a cable connecting device;

FIG. 3 is a view similar to FIG. 1 illustrating still another embodiment of an electrical cable connecting device; and

FIG. 4 is a view to a reduced scale illustrating the device of FIG. 1 bent through an exemplary angle of 90°.

DESCRIPTION OF ILLUSTRATED EMBODIMENTS

Reference is now made to FIG. 1 of the drawing will illustrates one exemplary embodiment of an electrical cable connecting device which is designated generally

by the reference numeral **10** and such device is suitably fastened in position against the terminal end portion **11** of an insulated electrical cable **12**.

The cable connecting device **10** comprises a clamp assembly **13** which is particularly adapted to be attached or fastened against the terminal end portion **11** of the cable **12** and an electrical connnector **14** which may be of any suitable standard construction and connector **14** is suitably fixed to the terminal end of cable end portion **11**. The device **10** also comprises a flexible or bendable tubular shell **15** fixed between the clamp assembly **13** and the connector **14** and in a manner to be subsequently described in more detail.

The shell **15** is in the form of a convoluted shell having a plurality of integral convolutions **16** and the shell **15** allows the end portion **11** to be bent into an infinite number of positions to allow easy mating or electrical connection of the electrical connector **14** with an associated electrical connector, not shown. Once the shell **15** and hence device **10** is bent into position the shell provides the sole means for holding end portion **11** in its bent position, whereby the device **10** is self-supporting in its bent position, i.e., device **10** will remain bent and need not be held in position by external means. For example, the device **10** may be bent through an angle of approximately 90°, as shown at **17** in FIG. **4**, and once such device is thus bent it will remain in such position indefinitely until it is bent into some other stable configuration which may be a different simple angle in one plane or one or more complex angles in a plurality of planes. This capability of the device **10** allows it to be fastened into position without imposing undue loads or forces on supporting structure which may be used to hold the device **10** and its associated end portion **11** of the cable **12** in position.

The electrical connector **14** has a tubular inner portion **20** which has an inside cylindrical surface **21** and the connector **14** has an outer portion **22** which is provided with suitable fastening means such as threads **23** which are used to fasten connector **14** to an associated connector. Similarly, the clamp assembly **13** comprises a fitting **24** having a tubular portion **25** provided with an inside cylindrical surface **26** and an externally threaded portion **27**. The shell **15** has an inner portion **30** which is received concentrically within cylindrical surface **26** of the tubular portion **25** comprising fitting **24** and shell **15** has an outer portion **31** which is received concentrically within cylindrical surface **21** of the tubular portion **20** comprising connector **14**.

Means **32** is provided for fixing end portions **30** and **31** in position within cylindrical surfaces **26** and **21** respectively and such fixing means may be a suitable adhesive, a plastic material which solidifies upon curing, a conventional electrical plotting compound, epoxy resin, or the like.

The assembly **13** also has a cable clamp **33** which has an internally threaded portion **34** which is threadedly fastened over the externally threaded portion **27** of the fitting **24**. The clamp **33** also has a clamp bar **35** which is fastened into position by a pair of fasteners such as threaded bolts **36** which secure or clamp the cable **12** firmly into position and prevent movement of cable end portion **11** relative to the clamp **33** and hence the entire connecting device **10**.

The device **10** employs an annular ring **37** of roughly inverted T-shaped cross-sectional configuration and made of an elastomeric material and a ring **40** between

clamp **33** and fitting **24** of its clamp assembly **13.** Upon installing the clamp assembly **13** in position the outer insulating cover of the cable **12** is stripped away from cable portion **11** and is suitably cut and reverse folded to define a flared or bell-shaped portion **42.** Portion **42** is folded against one edge of ring **40** and the other edge of such ring is urged against ring **37.** The cable portion **11** is thus fastened to assembly **13** by attaching clamp **35** in position and placing reverse flared portion **42** against ring **40.** The threaded portion **27** of fitting **24** is then threaded within threaded portion **34** and an inner edge **43** of portion **27** clamps the flared portion **42** tightly against ring **40** to provide a moisture-proof seal between the clamp **33** and the fitting **24.** The adhesive means **32** also provides a moisture-proof seal at the opposite ends of shell **15** whereby the entire device **10** and hence the terminal end portion **11** of the cable **12** are fastened into position in a moisture-proof manner.

Other exemplary embodiments of cable connecting devices of this invention are illustrated in FIGS. **2** and **3** of the drawing. The devices illustrated in FIGS. **2** and **3** are similar to the device **10**; therefore, such devices will be designated by the reference numerals **10A** and **10B** respectively and representative parts of each device which are similar to corresponding parts of the device **10** will be designated in the drawing by the same reference numerals as in the device **10** (whether or not such components are mentioned in the specification) followed by an associated letter designation, either A or B, and not described again in detail. Only those component parts of each device which are different from corresponding parts of the device **10** will be designated by new reference numeral also followed by an associated letter designation and described in detail. It should also be emphasized that the previous description of component parts of the device **10** is fully applicable to corresponding parts of the devices **10A** and **10B**.

The only difference between the device **10** and the device **10A** of FIG. **2** is that the device **10A** has a shell **15A** defined by integral helical convolutions **44A** rather than annular convolutions.

The device **10B** of FIG. **3** has a shell **15B** defined by helical convolutions **45B** and each of the convolutions has a roughly rectangular peripheral outline as illustrated at **46B**. In addition, the device **10B** has a braided protective flexible sleeve **47B** enclosing its shell **15B** and the sleeve **47B** may be made of any suitable material and is preferably made of woven metal wire. The braided sleeve **47B** has an axial length which corresponds to the length of shell **15B** and has opposite end portions **50B** and **51B** sandwiched between the shell **15B** and tubular portions **25B** and **20B** respectively of members **24B** and **14B**. The sleeve may also be fixed in position using adhesive means **32B**.

Although only the device **10** is illustrated in FIG. **4** as being bent at an exemplary angle of roughly 90° it will be appreciated that each of the devices **10A** and **10B** may also be bent in any desired manner so that the end portion of the electrical cable carried therewithin may be bent in an infinite number of positions to allow easy mating of the respective connectors **14A** and **14B** with associated electrical connectors. Once bent, each device **10A** and **10B** will remain in its bent position independently of external means.

The shells **15, 15A** and **15B** may be made using any suitable manufacturing technique and may be made of any suitable material. These shells have been successfully made of metallic materials such as steel.

While present exemplary embodiments of this invention, and methods of practicing the same, have been illustrated and described it will be recognized that this invention may be otherwise variously embodied and practiced within the scope of the following claims.

What is claimed is:

1. An electrical cable connecting device comprising a clamp assembly adapted to attach a terminal end portion of an associated electrical cable which has an outer insulating cover terminating in a reverse folded flared terminal end, said clamp assembly having a pair of cooperating rings which are adapted to clamp said flared terminal end therebetween to provide a moisture-proof seal between said end portion of said cable and said clamp assembly, an electrical connector adapted to be fixed to the terminal end of said end portion, a bendable tubular shell fixed between said assembly and said connector, said shell being adapted to provide a housing for said end portion of said cable and being adapted to allow said end portion to be bent into an infinite number of positions to allow easy mating of said connector with an associated electrical connector, said shell having a plurality of convolutions provided as an integral part thereof and said shell being adapted to hold said terminal end portion in each bent position, said electrical connector having a tubular inner portion and said shell having an outer end portion received concentrically within said tubular inner portion, said clamp assembly comprising a fitting having a tubular portion which receives the inner end portion of said shell therewithin, and means fixing said outer end portion of said shell within said tubular inner portion of said connector and said inner end portion of said shell within said tubular portion of said fitting in a moisture-proof manner.

2. A device as set forth in claim **1** in which said integral convolutions are annular convolutions.

3. A device as set forth in claim **1** in which said integral convolutions are helical convolutions.

4. A device as set forth in claim **1** in which each of said convolutions has a roughly rectangular peripheral outline.

5. A device as set forth in claim **1** and further comprising a braided flexible sleeve enclosing said shell and having opposite ends fixed to said connector and assembly.

6. A device as set forth in claim **1** in which said fitting has a threaded portion, and said clamp assembly further comprises a cable clamp having a cooperating threaded portion adapted to be threadedly fastened to said first-named threaded portion and having a clamp bar supported on its inner end portion which is adapted to clamp said cable firmly thereagainst.

7. A device as set forth in claim **6** and further comprising a braided flexible protective sleeve supported concentrically around said shell and having opposite ends fixed to said connector and assembly.

8. A device as set forth in claim **7** in which said braided sleeve is made of braided metal and said sleeve has each of its end portions sandwiched between an associated one of said tubular portions and said shell.

9. A device as set forth in claim **1** in which said fixing means comprises solidified adhesive means.

10. A device as set forth in claim **1** in which said shell is made of metal.

11. In combination: an electrical cable having an end portion including an outer electrical insulating cover which has a reverse folded flared terminal end, a clamp assembly attached to the inner end of said end portion, said clamp assembly having a pair of cooperating rings which clamp said flared terminal end therebetween to provide a moisture-proof seal between said end portion of said cable and said clamp assembly, an electrical connector fixed to the terminal outer end of said end portion, a bendable tubular shell having a plurality of convolutions provided as an integral part thereof fixed between said assembly and said connector, said shell providing a housing for said end portion of said cable and allowing said end portion to be bent into an infinite number of positions to allow easy mating of said connector with an associated electrical connector with said shell holding said end portion in each bent position, and means fixing opposite ends of said shell to said connector and assembly in a moisture-proof manner.

12. A combination as set forth in claim **11** in which said fixing means comprises solidified adhesive means.

13. A combination as set forth in claim **12** in which said shell is made of metal.

14. A device as set forth in claim **11** and further comprising a braided flexible protective sleeve supported concentrically around said shell and having opposite ends fixed to said connector and assembly.

* * * * *