US00D324855S

United States Patent [19]

Iino

[11] Patent Number: Des. 324,855

[45] Date of Patent: ** Mar. 24, 1992

[54] ELECTRONIC COMPUTER

[75] Inventor: Masaaki Iino, Yokohama, Japan

[73] Assignee: Kabushiki Kaisha Toshiba, Kanagawa, Japan

[**] Term: 14 Years

[21] Appl. No.: 461,462

[22] Filed: Jan. 5, 1990

[30] Foreign Application Priority Data

Jul. 6, 1989 [JP] Japan 1-24753

[52] U.S. Cl. D14/106

[58] Field of Search ..... D14/100, 101, 106, 107, D14/113, 115; D18/1, 7, 11, 12; D19/76; 235/145 A, 145 R; 341/22, 23; 358/249, 253; 364/706-710; 400/489, 492; 312/208; 340/700, 706, 711, 712

[56] References Cited

U.S. PATENT DOCUMENTS

D. 224,784	7/1972	Sucre et al.	D14/106
D. 254,005	1/1980	Zadock et al.	D14/106
D. 275,102	8/1984	MacConnel	D14/106
D. 280,511	9/1985	Moggridge et al.	D14/106
D. 280,622	9/1985	Moggridge et al.	D14/100
D. 282,843	3/1986	Kurihara et al.	D14/100
D. 283,511	4/1986	Dunn	D14/106
D. 284,193	6/1986	Marshall	D14/101
D. 284,474	7/1986	Sawada	D14/100
D. 287,969	1/1987	Kusanagi	D14/106
D. 288,566	3/1987	Chin et al.	D14/106
D. 289,177	4/1987	Sawada	D18/7
D. 289,763	5/1987	Fujii et al.	D14/106
D. 290,256	6/1987	Sapper et al.	D14/106
D. 290,845	7/1987	Yubisui et al.	D14/111
D. 291,442	8/1987	Kurihara	D14/106
D. 293,677	1/1988	Hara et al.	D14/106
D. 293,678	1/1988	Sawatani et al.	D14/106
D. 294,029	2/1988	Nishiyama et al.	D14/106
D. 294,831	3/1988	Hara et al.	D14/106
D. 295,176	4/1988	Nishimoto et al.	D14/106
D. 295,519	8/1988	Kimble	D14/106
D. 299,031	12/1988	Sugano	D14/106
D. 306,285	2/1990	Yu	D14/106
D. 306,433	3/1990	Mitchell	D14/106
D. 311,528	10/1990	Sugano et al.	D14/106
D. 316,852	5/1991	Sai et al.	D14/106
D. 317,302	6/1991	Shibuya et al.	D14/106

FOREIGN PATENT DOCUMENTS

100708	6/1988	China .
100709	6/1988	China .
101093	7/1988	China .
M8800660	10/1988	Fed. Rep. of Germany .
47-14961	5/1972	Japan .
499866	4/1979	Japan .
639216	11/1984	Japan .
650470	5/1985	Japan .
664175	10/1985	Japan .
684172	8/1986	Japan .
685000	8/1986	Japan .
685063	8/1986	Japan .
685121	8/1986	Japan .
685542	8/1986	Japan .
686374	9/1986	Japan .
686381	9/1986	Japan .
686386	9/1986	Japan .
686658	9/1986	Japan .
686706	9/1986	Japan .
695931	12/1986	Japan .
696188	1/1987	Japan .
697328	1/1987	Japan .
763838	6/1988	Japan .
747990	11/1988	Japan .
748513	11/1988	Japan .
749802	11/1988	Japan .
746985	4/1989	Japan .
763840	6/1989	Japan .
763855	6/1989	Japan .
67297	2/1987	Rep. of Korea .
85032	10/1988	Rep. of Korea .
92859	7/1989	Rep. of Korea .
92863	7/1989	Rep. of Korea .
852546	1/1987	Sweden .
852547	1/1987	Sweden .
105573	11/1988	Taiwan .
107394	1/1989	Taiwan .

OTHER PUBLICATIONS

Sharp Advertisement, 05/19/76.

Fanuc System P-Model, 07/27/83.

Moebel Interior Design, 01/05/84.

The Office 98-6, 01/31/84.

Demus 645, 02/22/84.

MRD Advertisement, 03/29/84.

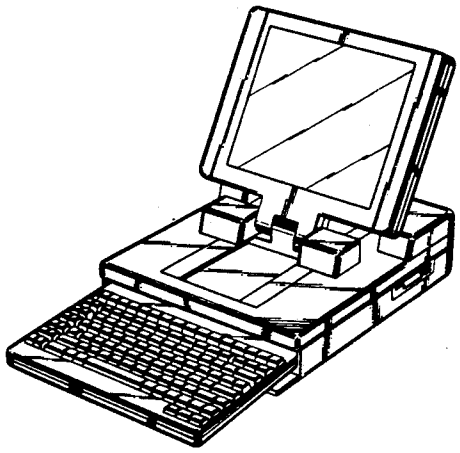

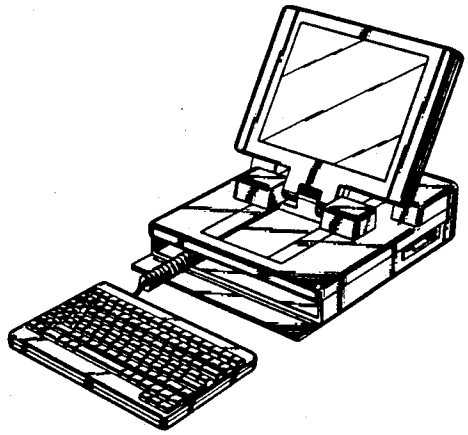

Gavilan Mobile Computer Brochure, 04/19/84.
Picture #J9016870, 05/08/84.
Hewlett Packard Advertisement, 05/18/84.
Hewlett Packard Advertisement, 06/05/84.
Epson HC-88, 07/01/84.
Hitachi Advertisement, 09/04/84.
Hewlett Packard Advertisement, 09/12/84.
Sharp PC-5000 Brochure, 09/26/84.
Data General One Advertisement, 09/28/84.
Apple Computer Apple IIC, 10/15/84.
TI Software Journal, Pro-Lite TM, 11/14/84.
IS-11c Advertisement, 11/14/84.
Dulmont Magnum Article in Portable Computer, 11/00/84.
IBM Advertisement, 12/06/84.
Tandy 200, 00/00/85.
General Corp. 4400, 01/14/85.
AVAL TM Advertisement, 02/11/85.
Picture #J60007802, 02/26/85.
AVAL TM20, 03/08/85.
Tandy 200, 03/16/85.
NEC Starlet PC-8401A Brochure, 03/28/85.
C & D News, 03/29/85.
Hewlett-Packard HP110, 04/00/85.
Fujitsu FM 16, 04/17/85.
Fujitsu FM16 TL Brochure, 05/22/85.
Data General One Brochure, 07/23/85.
Toshiba T 1100 Plus, 07/22/85.
Minato Electronics MODS-5000, 08/22/85.
GridCase Brochure, 09/24/85.
FBS Advertisement, 10/30/85.
NEC N6919 Model 80/80H, 11/11/85.
IBM Advertisement, 11/28/85.
Apple Computer IIC, 12/00/85.
Hewlett-Packard Portable Plus, 12/00/85.
FLM-700, 01/31/86.
Fujitsu FM 16, 05/21/86.
PC-816F Advertisement, 05/27/86.
Zenith Data Systems NEWSDATE Newsletter, 06/07/86.
Tandy 600 Advertisement, 07/25/86.
Ricoh JP70D Brochure, 09/29/86.
Data General One Brochure, 10/03/86.
Article re IBM Portable Personal Computer, 10/15/86.
NEC PC-98LT Advertisement, 10/23/86.
Yaskawa P-t50 Advertisement, 11/12/86.
Yaskawa Memocon ®-SC GL20 Advertisement, 03/27/87.
Data General One Model 2J Brochure, 05/20/87.
Hitachi B16LX Brochure, 08/31/87.
Ricoh Brochure, 09/17/87.
Sony Produce 100 Brochure, 09/18/87.
Panasonic FW-U1EX Advertisement, 10/02/87.
Nihon IBM 55 Model 5535, 10/19/87.
NEC Minitel 5 Advertisement, 10/29/87.
Rein Laptop 300 SLC Advertisement, 10/29/87.
IBM 5540/5535 Brochure, 11/04/87.
NEC PC-9800 Advertisement, 11/27/87.
Panasonic U1EX Advertisement, 12/08/87.
Schneider Multivision 300 SLC Catalog, 00/00/88.
Panasonic U1Pro, 01/04/88.
Diagnostic Products Review, 01/02/88.
Toshiba E & E News, 02/26/88.
Seiko-Epson PC-286L, 03/02/88.
Toshiba JW90FII Rupo Brochure, 03/03/88.
Hitachi B16LX Brochure, 04/05/88.
Sony Produce PJ-100EX Brochure, 04/05/88.
WS Japanese Advertisement, 04/27/88.
NEC Multispeed, Spring '88.
Samsung S5200, 05/10/88.
Datavue Snap 1+1, 05/10/88.
Portable Computer Review, p. 32, 05/10/88.
GridCase 1530 Advertisement, 05/10/88.
NEC MultiSpeed EL Model 2 Brochure, 05/10/88.
Sharp PC-5000 Brochure, 05/12/88.
Japanese Advertisement, 05/12/88.
Sanyo ES 100, 05/13/88.
NEC PC-9801 LV 21 Brochure, 05/13/88.
Sharp WV-500, 05/19/88.
Panafacom C-250 LT Brochure, 05/19/88.
NEC PC-9801 LX5C, 08/23/88.
Kyosera 386AX, 09/00/88.
Sharp AX 286L, 09/29/88.
NEC PC-9801, 10/26/88.
Sanyo MBC 17LTJH, 10/00/88.
Toshiba T 1600, 11/00/88.
Sanyo MBC 17LTJH, 11/28/88.
Oki "IF 386 AX", 12/09/88.
Kyosera 386-SX Laptop AX, 01/10/89.
Seiko-Epson PC-286LS, 02/16/89.
Chaplet Halikan LA-22, 04/21/89.
NEC PC-9801 LV21, 05/13/89.

Fujitsu G-150LT, 05/19/89.
Epson HC-88, HC80 Brochure, undated.
Epson PX-8 Personal Computer Brochure, undated.
Mitsubishi mp286L Laptop Personal Computer Brochure, undated.
Grid Brochure, undated.
Dauphin Laptop Computer Brochure, undated.
MicroDIRECT Brochure, undated.
SuperSoft Brochure, undated.
Panasonic KX-D4930 Advertisement, undated.
Ampere WS-1 Advertisement, undated.
NEC Contrast, undated.
NEC Starlet PC-8401A Advertisement, undated.
Victor Technologies, V 286 P Catalog, undated.
Visual Computer Brochure, undated.
Gavilan Mobile Computer Brochure, undated.
Olivetti Personal Computer M15 Brochure, undated.

Primary Examiner—Wallace R. Burke
Assistant Examiner—Freda S. Nunn
Attorney, Agent, or Firm—Banner, Birch, McKie & Beckett

[57] **CLAIM**

The ornamental design for an electronic computer, as shown and described.

DESCRIPTION

FIG. **1** is a top, front and right side perspective view of an electronic computer showing my new design;
FIG. **2** is a top plan view thereof;
FIG. **3** is a bottom plan view thereof;
FIG. **4** is a front elevational view thereof;
FIG. **5** is a rear elevational view thereof;
FIGS. **6** and **7** are respectively left and right side elevational views thereof, the keyboard in the pulled out position;
FIG. **8** is a right side elevational view thereof, the display panel and keyboard in the closed position;
FIG. **9** is a top, front and right side perspective view thereof, the keyboard in the pulled out position;
FIG. **10** is a front elevational view thereof, the display panel and keyboard in the closed position; and,
FIG. **11** is a top plan view thereof, the display panel and keyboard in the closed position.

FIG.1

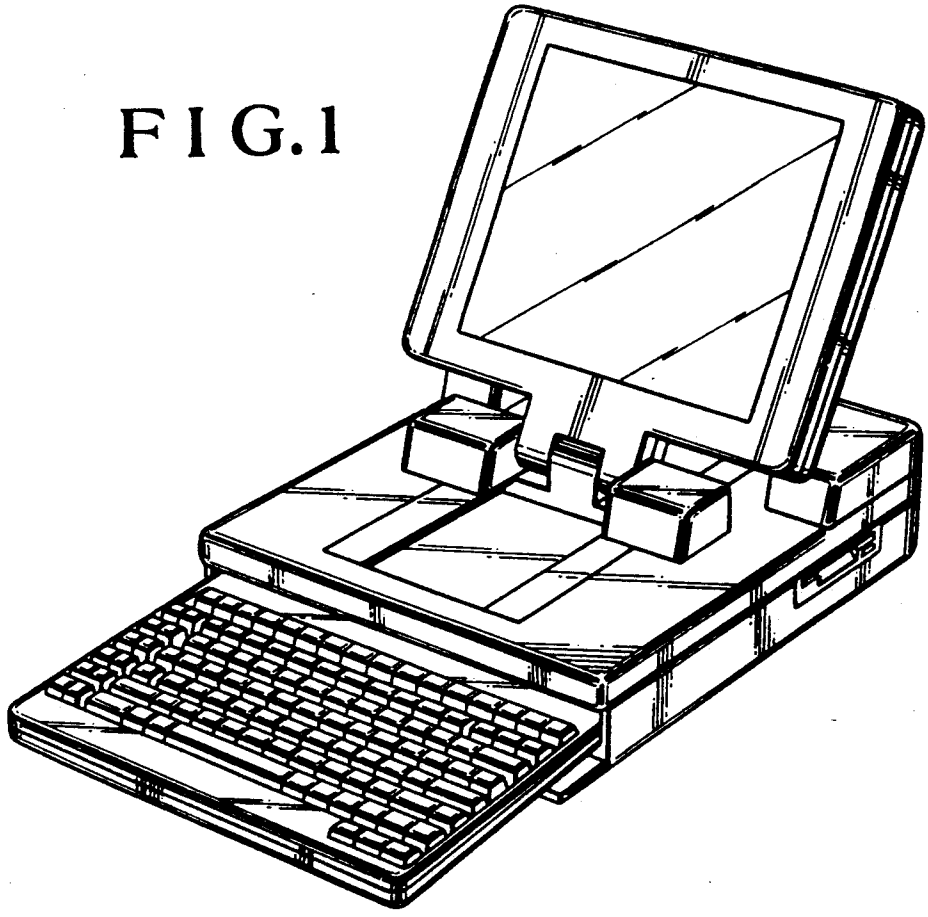

FIG.2

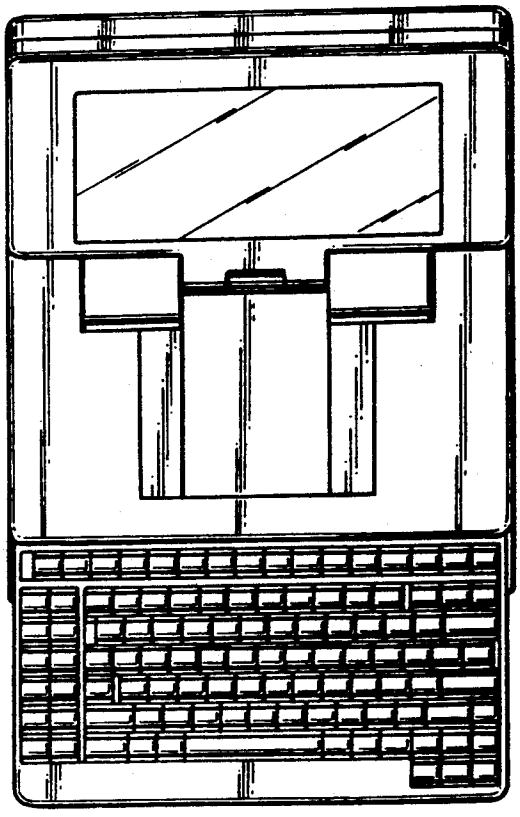

FIG.3

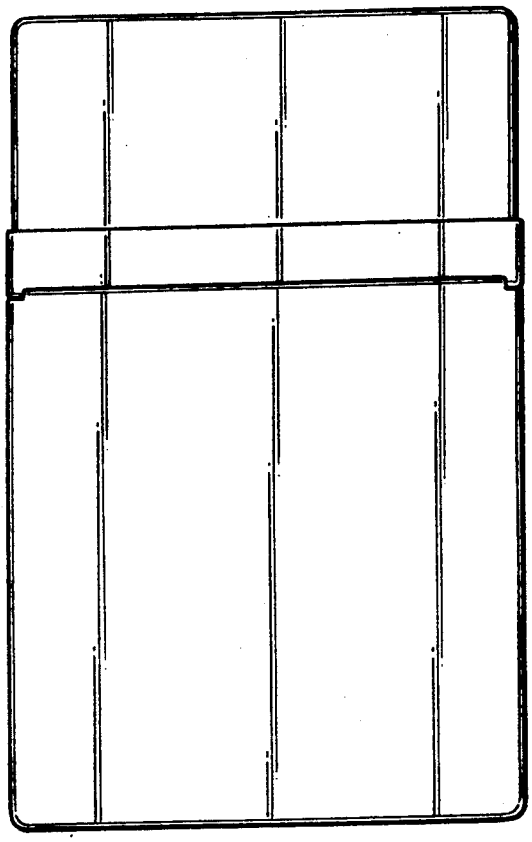

FIG.4

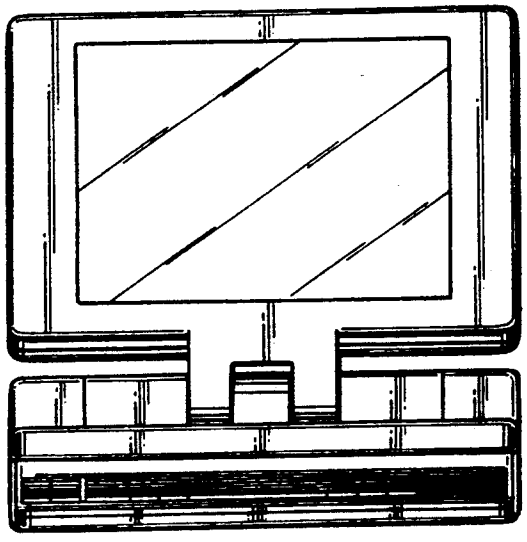

FIG.5

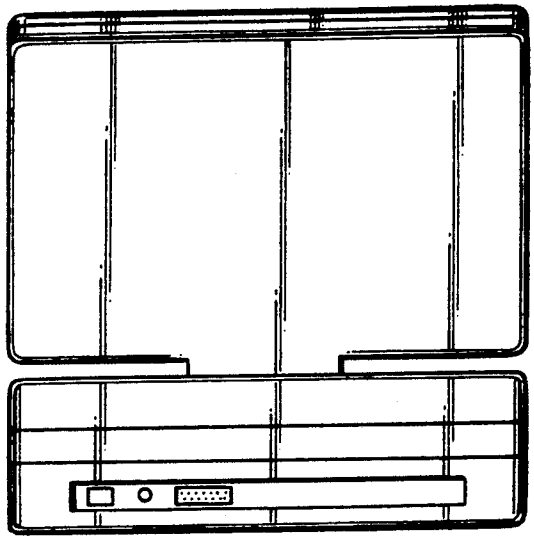

FIG.6

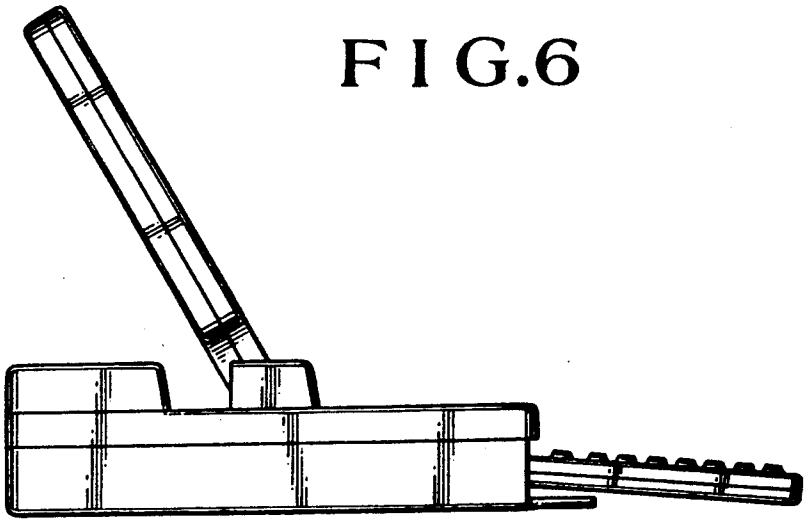

FIG.7

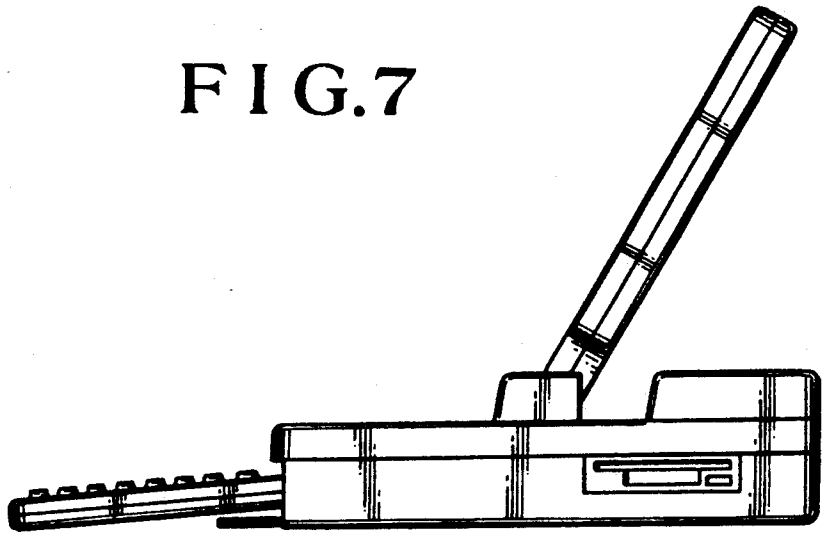

FIG.8

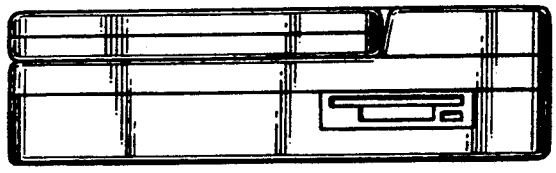

FIG.9

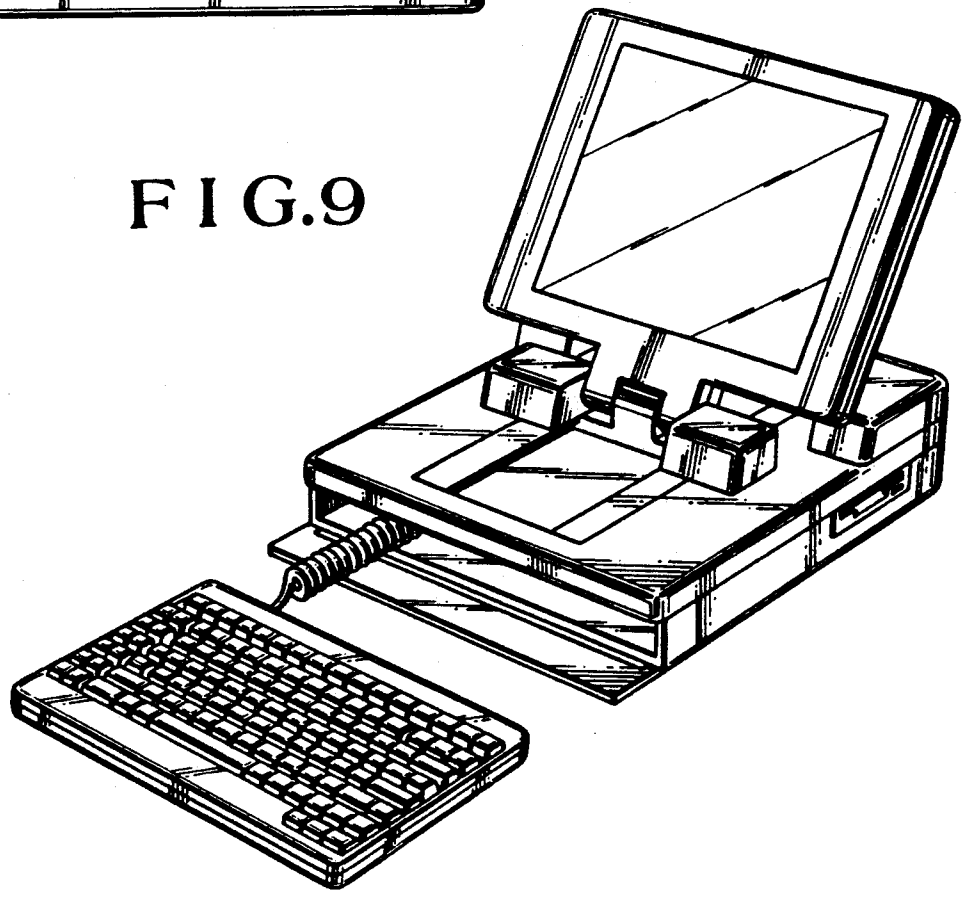

FIG.10

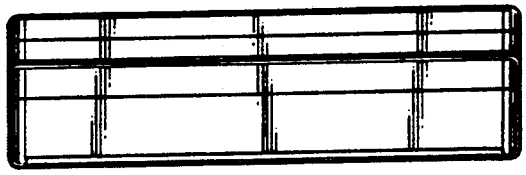

FIG.11

