US00D921188S

(12) United States Design Patent

Shor et al.

(10) Patent No.: US D921,188 S
(45) Date of Patent: ** Jun. 1, 2021

(54) **PUMP DEVICE PORTION**

(71) Applicant: **NeuroDerm, Ltd.**, Rehovot (IL)

(72) Inventors: **Eran Shor**, Arugot (IL); **Tsabar Mor**, Adi (IL); **Nir Lilach**, Kfar Yehoshua (IL); **Rami Grossfeld**, Haifa (IL); **Yoav Tikochinsky**, Tel Aviv (IL); **Serdar Ozsumer**, Milan (IT)

(73) Assignee: **NeuroDerm, Ltd.**, Rehovot (IL)

(**) Term: **15 Years**

(21) Appl. No.: **29/655,589**

(22) Filed: **Jul. 5, 2018**

(51) **LOC (13) Cl.** **24-02**

(52) **U.S. Cl.**
USPC **D24/111**

(58) **Field of Classification Search**
USPC D24/111–113, 127, 107, 108, 169
CPC A61M 5/14248; A61M 2005/14268; A61M 5/14244; A61M 5/14284; A61M 5/14276
See application file for complete search history.

(56) **References Cited**

U.S. PATENT DOCUMENTS

D669,166	S *	10/2012	Estes	D24/111
D687,541	S *	8/2013	Estes	D24/111
10,463,572	B2 *	11/2019	Shor	A61M 5/14216
10,463,787	B2 *	11/2019	Shor	A61M 5/1413
D868,689	S *	12/2019	Shor	D13/108
10,603,430	B2 *	3/2020	Shor	A61M 5/1782
2003/0100863	A1 *	5/2003	Shekalim	A61M 5/16881 604/141
2012/0143133	A1 *	6/2012	Congnome Cane'	A61M 5/1422 604/131
2012/0330270	A1 *	12/2012	Colton	A61M 5/1456 604/500
2014/0194818	A1 *	7/2014	Yodfat	A61M 5/31576 604/151
2016/0184512	A1 *	6/2016	Marbet	A61M 5/14248 604/156
2016/0310662	A1 *	10/2016	Schabbach	A61M 5/14228
2019/0009019	A1 *	1/2019	Shor	A61M 5/31528
2019/0201614	A1 *	7/2019	Shor	A61M 5/1407
2019/0209773	A1 *	7/2019	Shor	A61M 5/345
2019/0214967	A1 *	7/2019	Shor	A61J 1/2013
2019/0358393	A1 *	11/2019	Marbet	A61M 5/14248
2020/0093984	A1 *	3/2020	Shor	A61M 5/31528
2020/0345929	A1 *	11/2020	Ben-David	A61M 5/1456

FOREIGN PATENT DOCUMENTS

EM	005940509-0001	*	3/2019
EM	005940509-0003	*	3/2019
JP	D1631226	*	5/2019

(Continued)

Primary Examiner — Lilyana Bekic
(74) *Attorney, Agent, or Firm* — Goodwin Procter LLP

(57) **CLAIM**

The ornamental design for a pump device portion, as shown and described.

DESCRIPTION

FIG. **1** is a front perspective view of a pump device portion;
FIG. **2** is a front of the pump device portion;
FIG. **3** is a rear view of the pump device portion;
FIG. **4** is a right side view of the pump device portion;
FIG. **5** is a left side view of the pump device portion;
FIG. **6** is a top view of the pump device portion;
FIG. **7** is a bottom view of the pump device portion; and,
FIG. **8** is a rear perspective view of the pump device portion.
The broken lines shown in the drawings depict portions of the pump device that form no part of the claimed design.

1 Claim, 6 Drawing Sheets

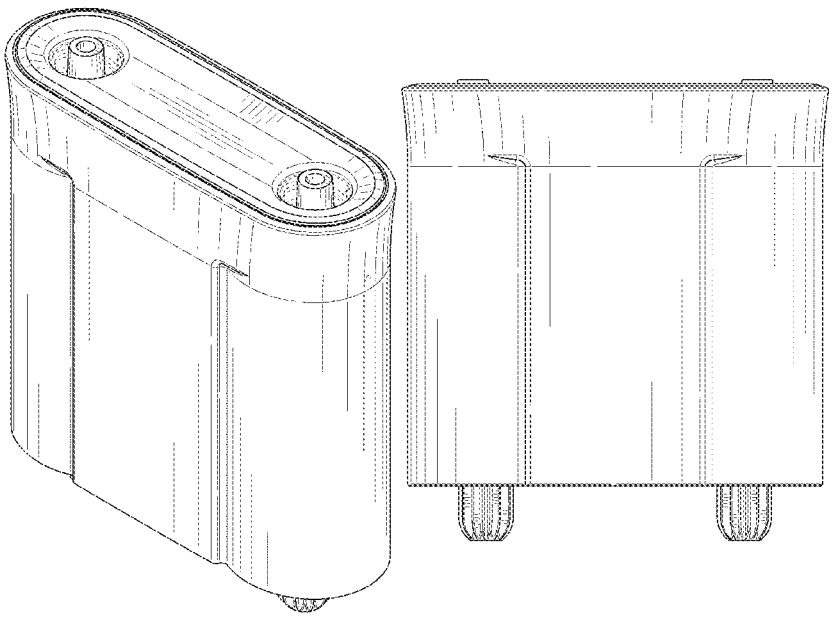

(56) **References Cited**

FOREIGN PATENT DOCUMENTS

JP	D1631656	*	5/2019
JP	D1631658	*	5/2019
JP	D1638334	*	8/2019

* cited by examiner

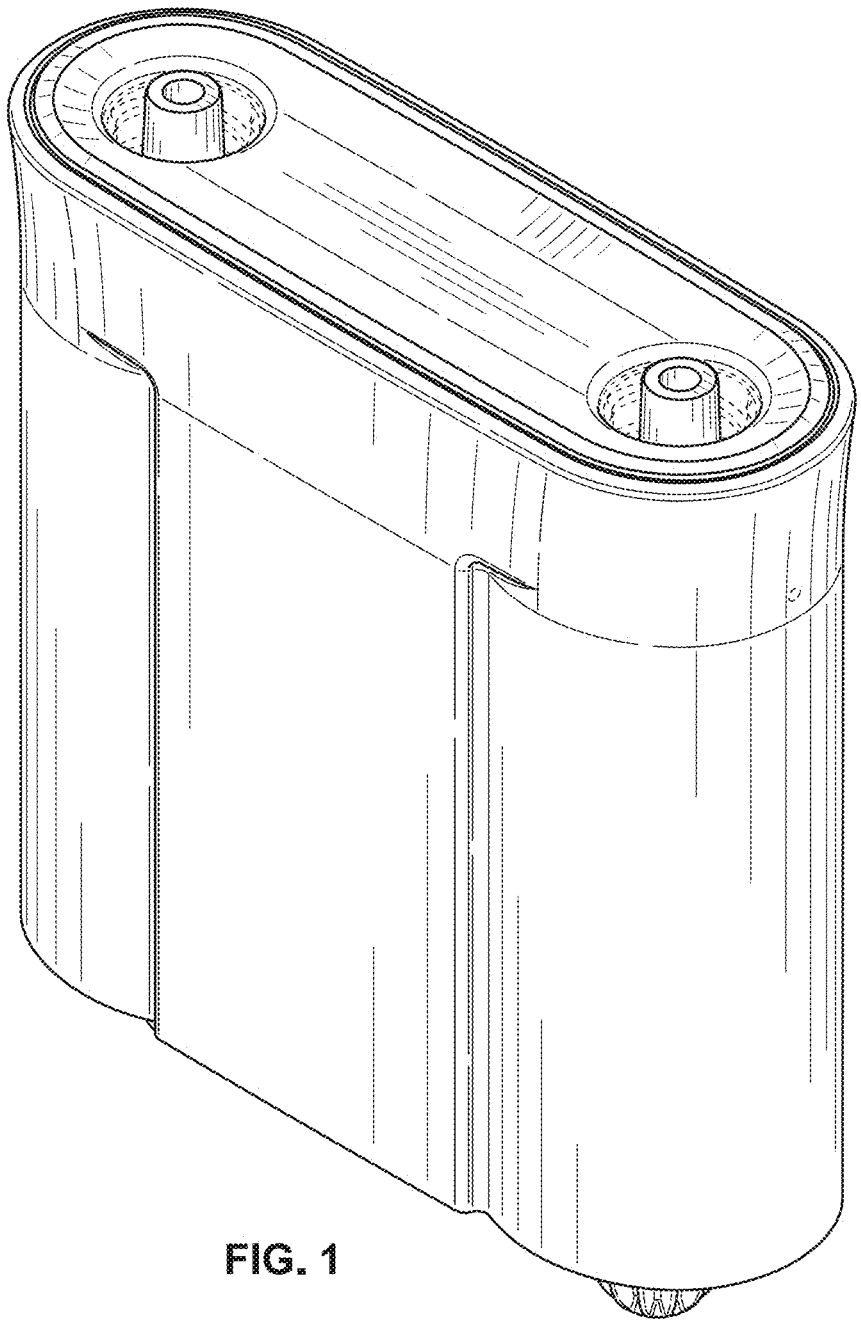

FIG. 1

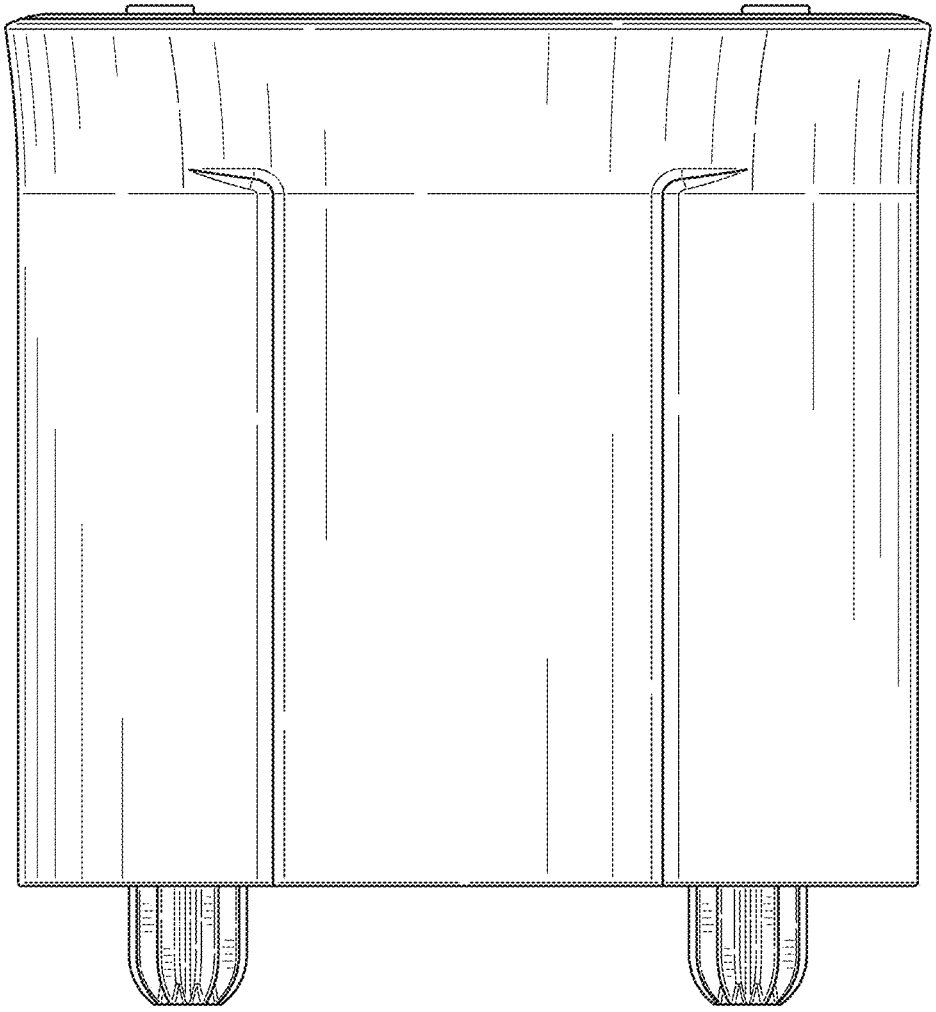

FIG. 2

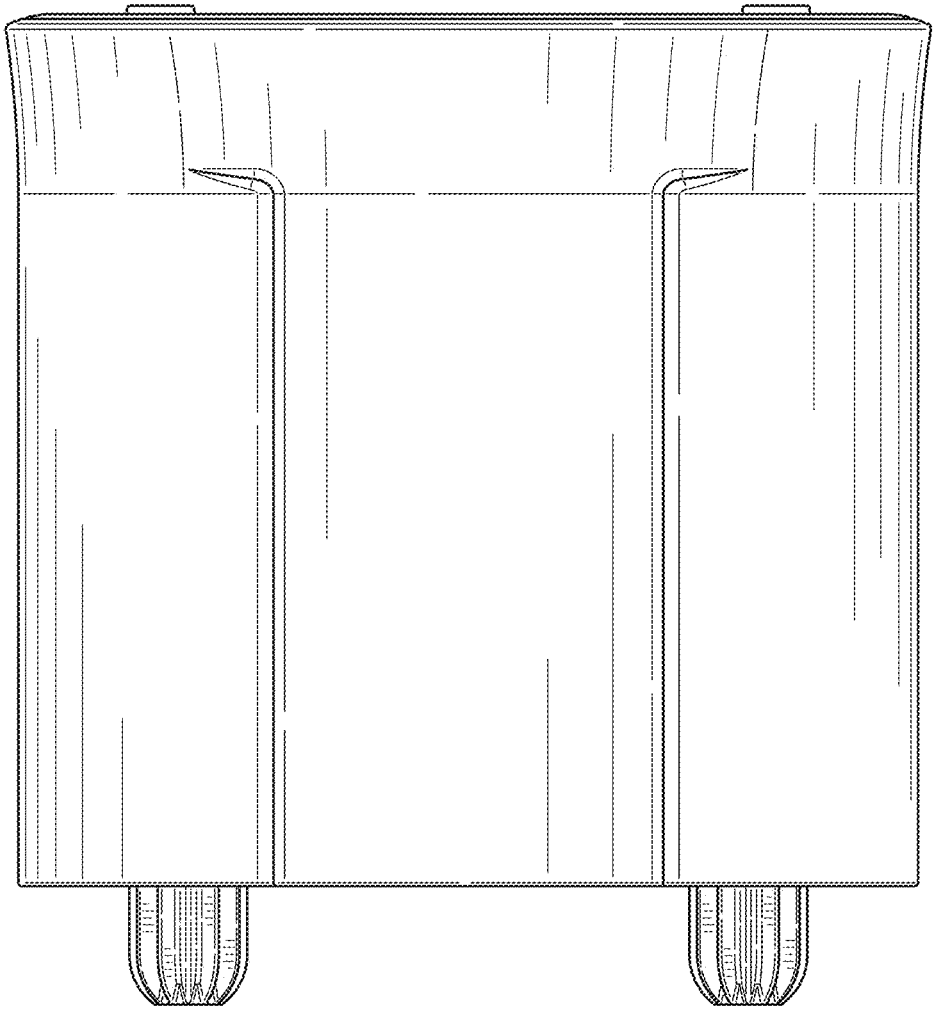

FIG. 3

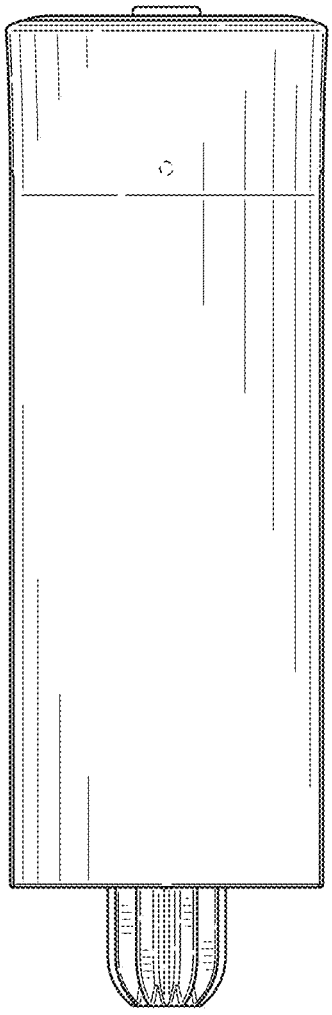

FIG. 4

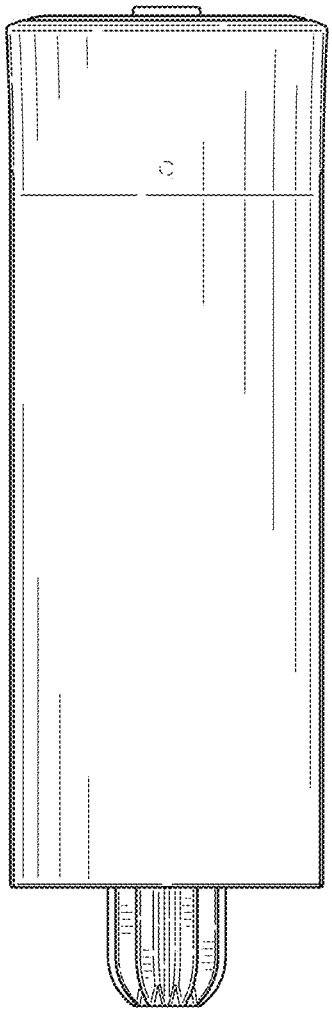

FIG. 5

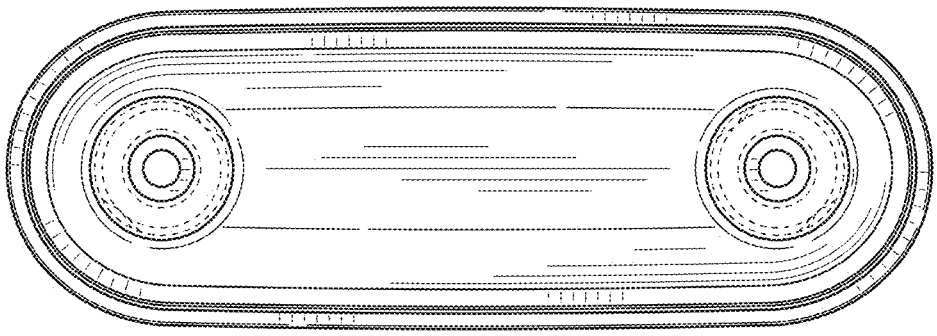

FIG. 6

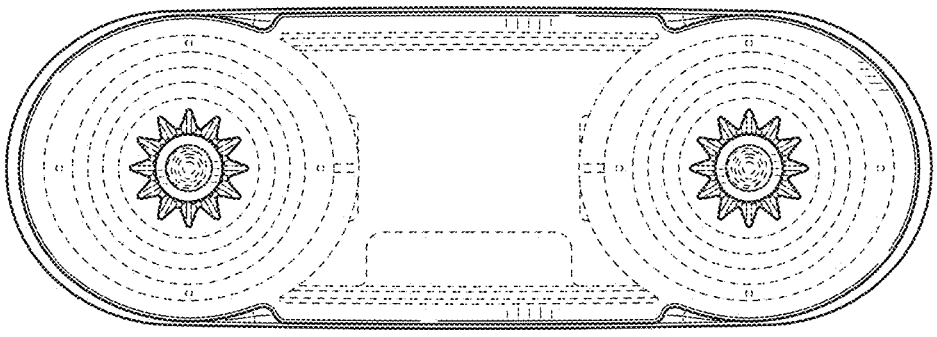

FIG. 7

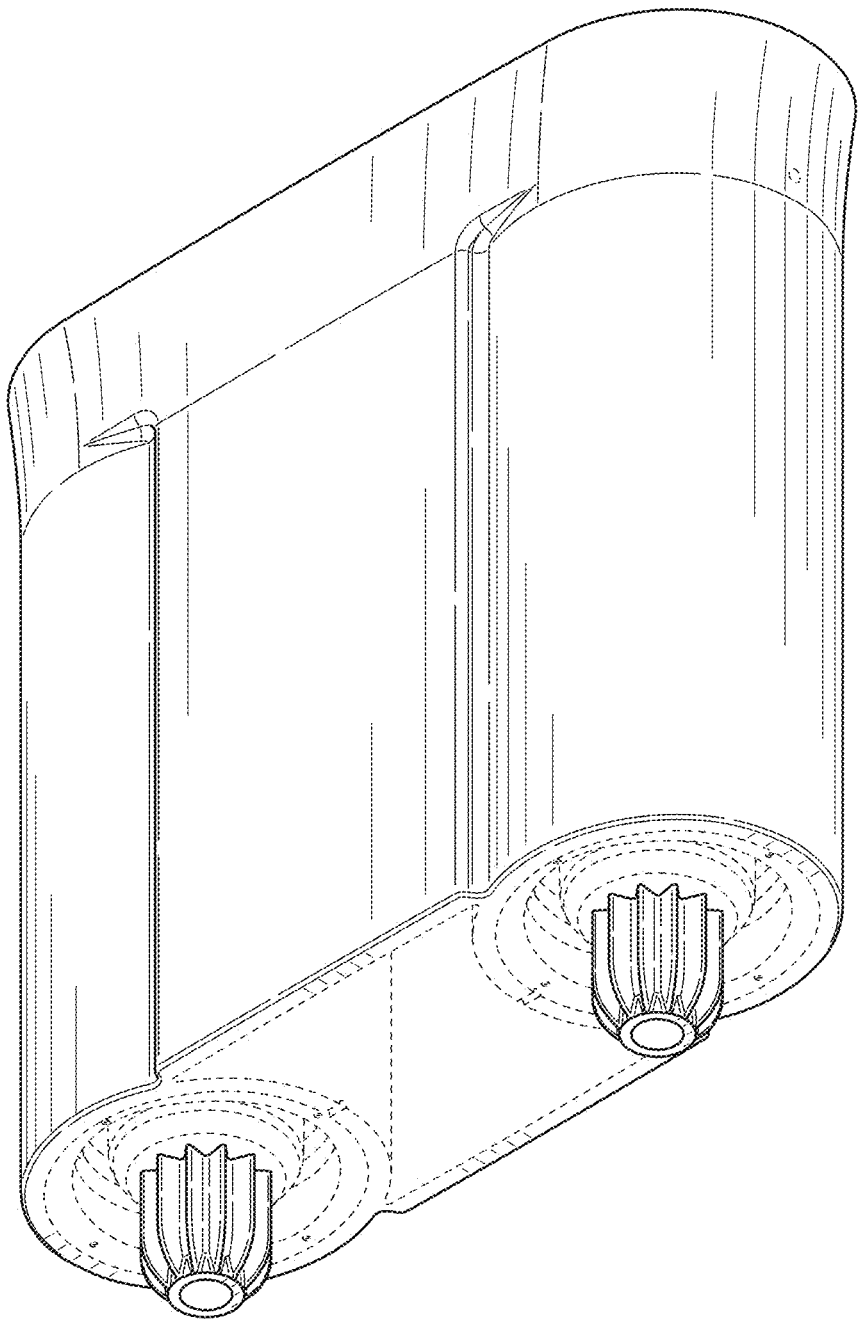

FIG. 8