H. B. COOLEY & W. S. BACON.

DRINKING CUP.

APPLICATION FILED FEB. 11, 1911.

1,116,676. Patented Nov. 10, 1914.

Fig. 1.

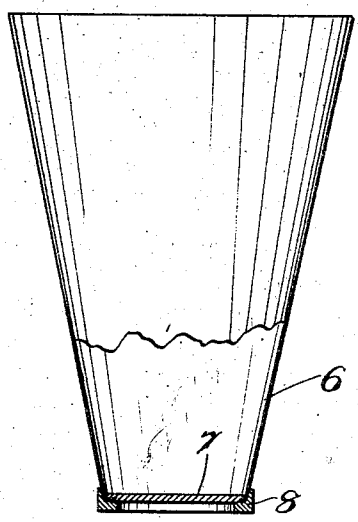

Fig. 2.

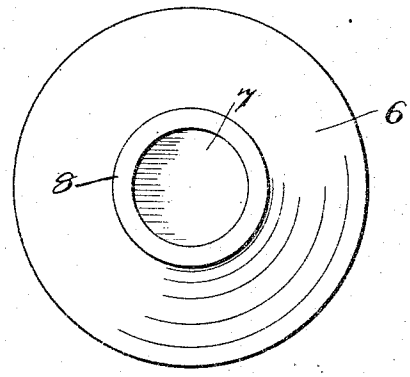

Fig. 3.

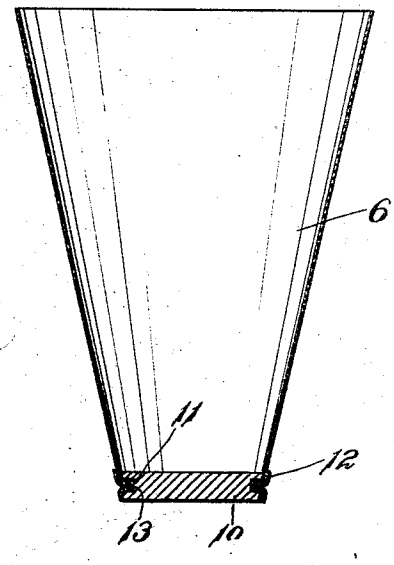

Fig. 4.

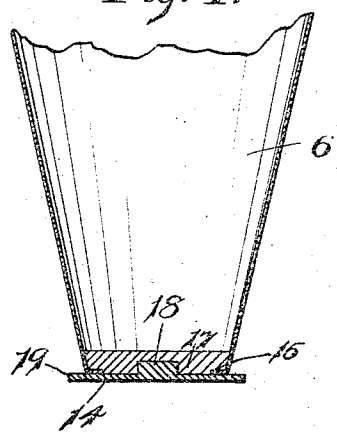

WITNESSES:

Louis Lucia.

Gertrude B. Lynch.

INVENTORS.

Henry B. Cooley

William S. Bacon.

BY

Arthur B. Jenkins,

ATTORNEY.

UNITED STATES PATENT OFFICE.

HENRY B. COOLEY AND WILLIAM S. BACON, OF NEW BRITAIN, CONNECTICUT, ASSIGNORS TO THE AMERICAN PAPER GOODS COMPANY, OF MONTCLAIR, NEW JERSEY, A CORPORATION OF NEW JERSEY.

DRINKING-CUP.

1,116,676. Specification of Letters Patent. Patented Nov. 10, 1914.

Application filed February 11, 1911. Serial No. 607,989.

To all whom it may concern:

Be it known that we, HENRY B. COOLEY and WILLIAM S. BACON, each a citizen of the United States and a resident of New Britain, in the county of Hartford and State of Connecticut, have invented a new and Improved Drinking-Cup, of which the following is a specification.

Our invention relates more especially to that class of drinking cups that are comparatively inexpensive, and that are designed for a limited individual use, and the object of the invention and in the use of which the objects herein set out may be attained is to provide a device of this class that may be cheaply made and that will effectually serve the purpose for which it is intended.

Some forms of a structure embodying our invention are illustrated in the accompanying drawings and in which—

Figure 1 is a view in side elevation, partially in section, of a cup embodying our invention, the relative proportions of the different parts being distorted in order to illustrate the invention. Fig. 2 is a bottom view of the cup shown in Fig. 1. Fig. 3 is a detail view in central section through a cup illustrating a modified form of our invention, and Fig. 4 is a view illustrating another modified form of our invention.

In the construction of drinking cups of the kind herein referred to, by reason of the extremely short and limited use to which they are put, it is essential that they may be constructed at a minimum cost and at the same time effectually serve their purpose to retain liquids. It is further of importance that these cups shall be extremely light, as to weight, and yet have the requisite to stand upright and not be easily over-tipped, and we find that this objection is overcome by the construction herein which permits an added weight to be readily supplied to the bottom of the cup.

In the accompanying drawings, the numeral 6 denotes the body of the cup, that is made of very thin and extremely pliant material as paper, this being suitably treated in any well known manner to render it impervious to moisture and to effectually hold a liquid. In the preferred form of construction a piece is cut to the desired shape from this material and the ends are brought together and lapped so that a seam or joint is formed extending lengthwise of the body of the cup, these ends being secured in any suitable manner as by means of an adhesive, and the piece composing the body of the cup is so formed that it will have a frustum conical shape, of considerably smaller dimensions at the bottom than at the top, and with this shape of cup which is preferred the added weight at the bottom hereinbefore described becomes of increased importance.

The bottom of the cup is formed by an inner piece closing the opening in the body and by an outer piece so formed that the lower edge of the body may be tightly clamped between them, in this form of construction the inner piece 7 being composed of any suitable material shaped to closely and tightly fit within the lower end of the body, in fact being of such size that a little force is required to place it in its proper position. The outer or clamping member 8 is formed to closely encircle the body and bind its lower edge tightly against the inner member or what we term a button.

By reason of the peculiar uses to which these cups are put, they will be obtained by users in considerably large numbers, and the question of packing and storing thus becomes important. The flexibility of the body of the cup enables the cups embodying our invention to be stored in a very small and compact space as the bodies may be creased or bent to occupy scarcely more than a double thickness of the paper and the added thickness of the bottom. In this treatment of the cups as well as in the use for which they are intended, it is essential that the parts, especially the button and the body composing the joint shall be protected from yielding or flexible movement which would tend to loosen the joint, and we have, therefore, found it highly advantageous to construct the clamp or supporting ring so that it will not yield to forces occurring in the ordinary uses to which the cup may be put. A ring thus constructed completely shields the joint and prevents any force or strain from being brought upon it, as all such strain must be applied radially of the bottom, any force applied in any other direction not being transmitted to the joint by reason of the flexibility of the body which would first receive force applied from

any other direction. We have found that a ring constructed of metal formed comparatively rigid satisfactorily answers this requirement as well as providing the added weight which is of importance as above described. In the form of device shown in Fig. 1 this ring 8 is preferably recessed on its upper surface so that the button and the lower edge of the body will set into this recess, the size of which is such that the body and button must be forced into place This construction also provides a flange located underneath the cup and affording a rest or support which thoroughly shields the joint from any undue force and thus aids in making it tight.

In the form of device shown in Fig. 3, the button 10 is provided with a groove 11 in its outer edge and a metallic band or ring 12 is employed which may have a rib 13 for forcing the lower part of the body into the groove to form a tight joint. In this construction, the lower edge of the body and the button are tightly bound together, so that there is no liability of a force under ordinary uses being applied which will loosen the joint.

In the form of device shown in Fig. 4, the inner member or button 17 has a substantial thickness and as hereinbefore described, is of a size to tightly fit within the body 6, the lower edge of the latter being turned inward to form a lip 15. The clamping or binding member 14 is fixed in place as by means of a boss 18 fitting a recess in the center of the button 17, this boss being of such size that force will be required to place it in position. In this form of the device the lip 15 is tightly clamped between the button and the bottom 14, and the latter is of a size to form a flange 19, giving a neat appearance to the cup, and also being of a size to prevent it from being easily tipped over. This metallic bottom 14 also gives added weight which supplies stability to the cup and also protects the joint in the manner herein above described with respect to the other forms.

Other advantages than those herein specifically described will appear from the foregoing illustration and explanation, and these may be departed from to a greater or lesser extent and yet be within the spirit and intent of the invention, and we do not, therefore, limit ourselves to the exact details herein set forth.

We claim:—

A drinking cup including a body composed of extremely thin, flexible, collapsible material, an inner member of comparatively rigid material to form a support for said body and wholly fitting therein, and a weighting clamping member closely fitting said inner member and securely clamping the body between it and said inner member, said clamping member being of a width much greater than that of the lower part of the body and having a comparatively thin edge projecting as a flange for a considerable distance beyond the bottom to provide a suitable support therefor.

HENRY B. COOLEY.
WILLIAM S. BACON.

Witnesses:
ERNESTINE D. KLUNKER,
E. G. GEEHRING.