Nov. 5, 1968 TOSHIHIDE KAKINUMA 3,408,970

THREAD TENSIONING ARRANGEMENT FOR SEWING MACHINES

Filed Jan. 14, 1964 4 Sheets-Sheet 1

PRIOR ART

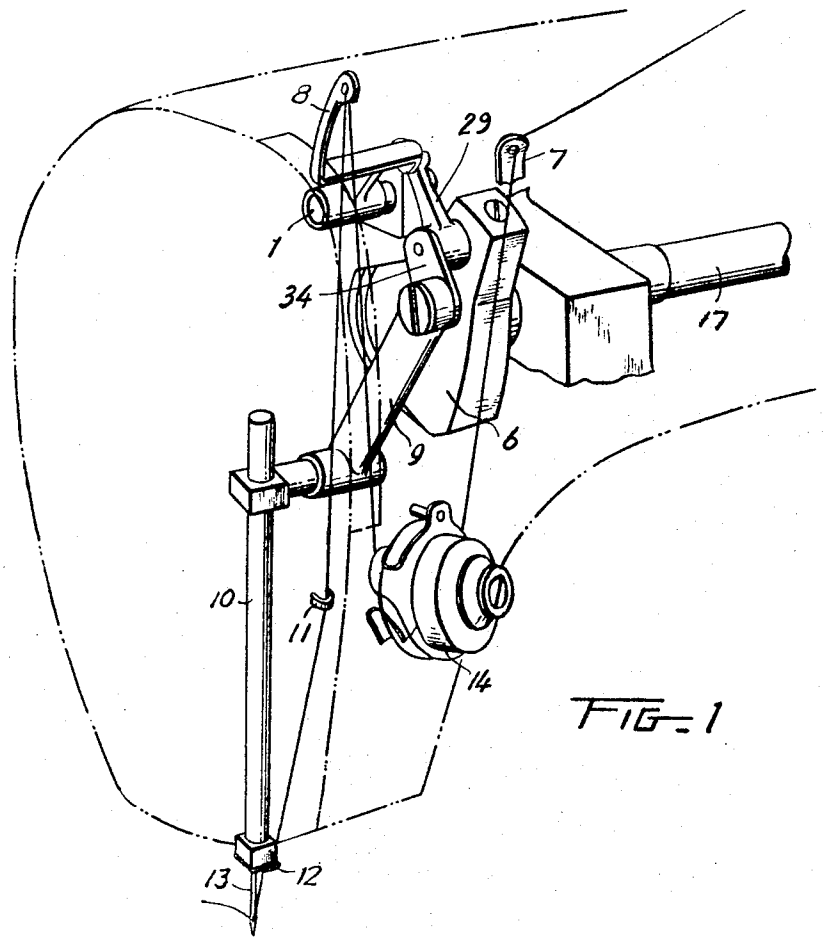

FIG. 1

INVENTOR.
Toshihide Kakinuma
BY
Michael S. Striker
Attorney

Nov. 5, 1968 TOSHIHIDE KAKINUMA 3,408,970

THREAD TENSIONING ARRANGEMENT FOR SEWING MACHINES

Filed Jan. 14, 1964 4 Sheets-Sheet 2

FIG. 2

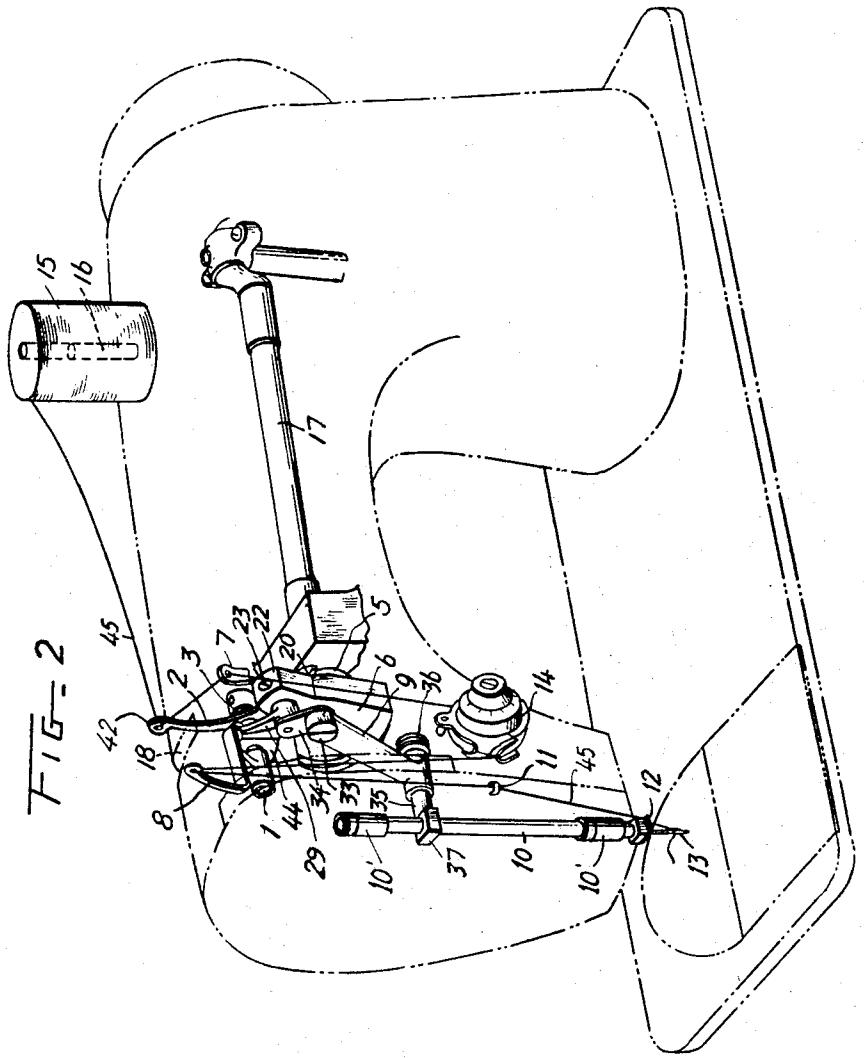

INVETOR.
Toshihide Kakinuma
BY
Michael S. Striker
Attorney

Nov. 5, 1968 TOSHIHIDE KAKINUMA 3,408,970

THREAD TENSIONING ARRANGEMENT FOR SEWING MACHINES

Filed Jan. 14, 1964 4 Sheets-Sheet 3

FIG. 3

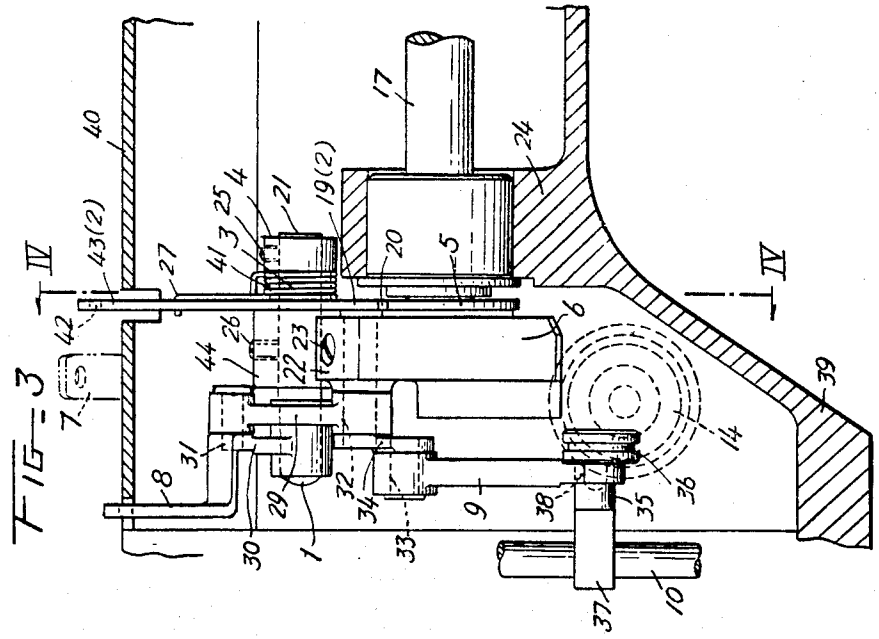

FIG. 4

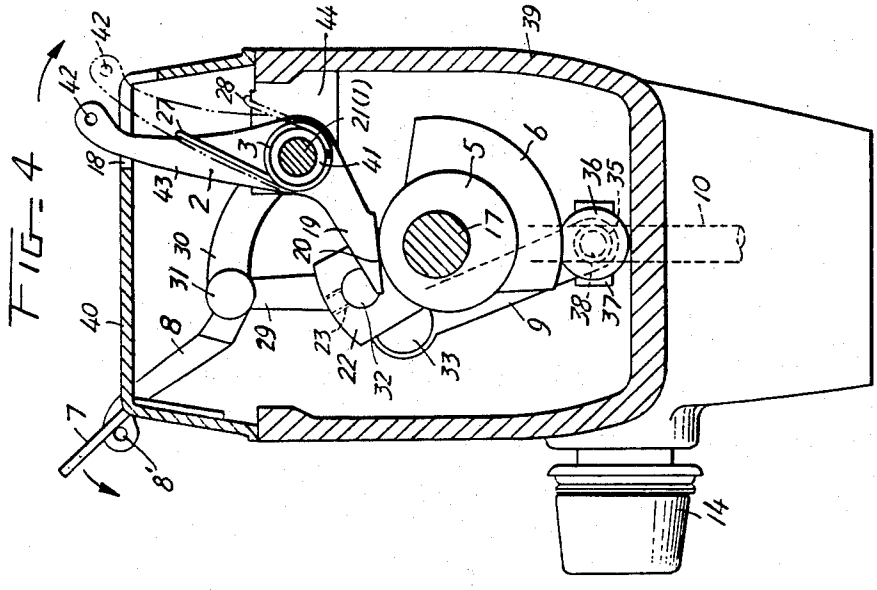

INVENTOR.
Toshihide Kakinuma
BY
Michael S. Striker
Attorney

Nov. 5, 1968 TOSHIHIDE KAKINUMA 3,408,970

THREAD TENSIONING ARRANGEMENT FOR SEWING MACHINES

Filed Jan. 14, 1964 4 Sheets-Sheet 4

FIG. 5

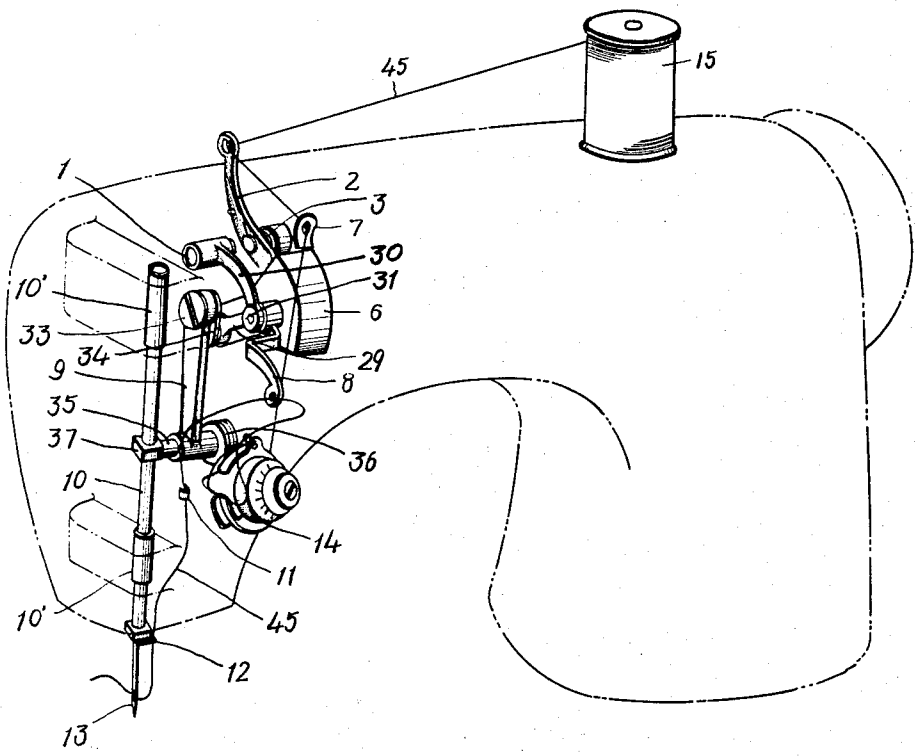

INVENTOR.
Toshihide Kakinuma

United States Patent Office 3,408,970 Patented Nov. 5, 1968

3,408,970

THREAD TENSIONING ARRANGEMENT FOR SEWING MACHINES

Toshihide Kakinuma, Kita-ku, Tokyo, Japan, assignor to Janome Sewing Machine Co., Ltd., Tokyo, Japan

Filed Jan. 14, 1964, Ser. No. 337,685
13 Claims. (Cl. 112—245)

ABSTRACT OF THE DISCLOSURE

A first reciprocable thread guide of a sewing machine draws thread from a spool and supplies it through a frictional tensioning device to a second reciprocable thread guide which feeds the thread to the needle of the sewing machine. The reciprocation is timed so that the second threaded guide draws thread slackened by the first guide through the tensioning device whereby the thread tension at the needle is held constant by the tensioning device.

The present invention relates to a thread tensioning arrangement for sewing machines, and more particularly to a device controlling the thread supplied to the needle of a sewing machine in such a manner that the thread tension remains substantially constant.

Sewing machines are generally provided with a thread tensioning device which is adjustable to determine the tension of the thread which is supplied to the needle from a spool. A thread guiding member is reciprocated to draw the thread from the thread tensioning device, and to supply the thread in slackened condition to the eye of the needle. However, the tension of the thread does not depend on the thread tensioning device only, but also on the forces required for overcoming the inertia of the spool and frictional forces which resist the movement of the thread toward the thread tensioning device. The size of the spool of thread, the amount of wound thread on the spool, variations of the amount of thread used for the stitches made by the needle, particularly during zigzag operations, all influence the thread tension and result in a row of stitches in which the thread is not uniformly tensioned so that the fabric is pulled together by overtensioned stitches and wrinkles appear along the seam in the fabric.

It is one object of the invention to overcome this disadvantage of prior art constructions, and to provide a thread tensioning arrangement for a sewing machine which assures uniform tension of the thread forming a row of stitches or a seam.

Another object of the invention is to provide a threaded tensioning arrangement in which the influence of the size and weight of the supply spool and the winding thereon on the thread tension is eliminated.

Another object of the present invention is to provide a thread tensioning device in which the thread tension is not influenced by friction opposing the turning movement of the thread supply spool.

Another object of the invention is to slacken the thread supplied to a thread tensioning device when thread is drawn from the same for supplying the needle with thread.

With these objects in view, a thread tensioning arrangement according to one embodiment of the invention comprises a first reciprocable thread guiding member for drawing thread from a spool mounted on a spool supporting member; a second reciprocable thread guiding member for drawing the thread from the first thread guiding member and for supplying the threat to the needle of the sewing machine; and means for reciprocating the first and second thread guiding members in timed relation so that the second thread guiding member draws thread slackened by the first thread guiding member. In this

manner, the tension of the thread supplied to the needle is substantially constant.

A thread tensioning device engages the thread intermediate the two thread guiding members. The first thread guiding member has an eye holding a thread portion between the spool and the thread tensioning device, and draws thread from the spool during a reciprocating stroke in one direction and moves the thread towards the thread tensioning device during the reciprocating stroke in the opposite direction so that the thread between the first thread guiding member and the thread tensioning device is slackened. The second thread guiding member has an eye holding the thread portion between the thread tensioning device and the needle, and draws thread from the thread tensioning device while reciprocating in one direction, and supplying the thread to the needle while reciprocating in the opposite direction. Due to the timing of the strokes of the two thread guiding members by the common drive means, the second thread guiding member draws thread from the thread tensioning device only when the first thread guiding member slackens the thread portion leading to the thread tensioning device so that the tension of the thread supplied to the needle depends only on the adjustment of the thread tensioning device whereby the tension of the thread supplied to the needle is substantially constant.

The novel features which are considered as characteristic for the invention are set forth in particular in the appended claims. The invention itself, however, both as to its construction and its method of operation together with additional objects and advantages thereof, will be best understood from the following description of specific embodiments when read in connection with the accompanying drawings, in which:

FIG. 1 is a fragmentary perspective view illustrating a thread tensioning arrangement according to the prior art;

FIG. 2 is a fragmentary perspective view illustrating an embodiment of the invention in a first operational position;

FIG. 3 is a fragmentary sectional view illustrating the embodiment of FIG. 2 on an enlarged scale;

FIG. 4 is a cross sectional view taken on line IV—IV in FIG. 3; and

FIG. 5 is a fragmentary perspective view illustrating the embodiment of FIG. 2 in another operational position.

Referring now to the drawings, and more particularly to FIGS. 2 to 5, a drive shaft **17** is mounted in a bearing **24** provided on the housing **39** of the sewing machine which is closed on top by a cover **40**. An eccentric cam **5** is carried by shaft **17** adjacent its journaled portion, as best seen in FIG. 3 and cooperates with a face **20** on a cam follower arm **19** of a thread guiding member **2** which has another arm **43** terminating in a free end formed with a thread guiding eye **42**, as best seen in FIG. 4. Thread guiding member **2** is mounted on a stationary support shaft **21** which is supported by a frame portion **44** of the machine housing, and secured by a screw **26**, as shown in FIG. 3. A portion of shaft **21** projects from frame portion **44** to the right as viewed in FIG. 3, and carries thread guiding member **2** and a spring **3** having one arm **27** abutting the arm **43** of thread guiding member **2**, and another end **28** abutting the frame portion **44** so that thread guiding member **2** is springloaded to turn in counterclockwise direction as viewed in FIG. 3 so that face **20** of follower arm **19** abuts the peripheral cam track of cam **5**. A collar **4** is mounted at the end of shaft **21** and held in place by a screw **25**.

The other end portion **1** of shaft **21** projects from frame portion **44** to the left as viewed in FIG. 3 and supports one end portion **30** of a thread guiding member **8**

for turning movement. The other end portion of thread guiding member **8** has an eye **8'**. A link **29** is connected to a pivot **31** which is supported in the center region of thread guiding member **8**, the other end of link **29** being connected by a pivot pin **32** to an arm **22** of a counterbalanced crank member **6** carried by drive shaft **17**. A screw **23** secures pivot pin **32** to the arm **22**.

Another link **34** is also mounted for turning movement on pivot pin **32** and is connected by a pivot pin **33** to a link **9** which is turnably connected to a shaft portion **35** which terminates in a head portion **37** supporting needle bar **10**. Needle bar **10** is mounted in guides **10'** for reciprocating vertical movement with needle **13**, as shown in FIG. 2.

A spool supporting member **16** is mounted on cover **40** of the housing, and supplies a thread **45** to the eye **42** of thread guiding member **2**. The thread is deflected 90° and passes through a stationary thread guide **7** in horizontal direction, whereupon it is downwardly guided through a conventional thread tensioning device **14** mounted on the housing **39** of the machine. The thread is then guided in upward direction through the eye **8'** of thread guiding member **8** and then downward through a stationary thread guide **11** on the housing, and a stationary thread guide on the support **10'** of the needle bar.

When the above described structure of an embodiment of the invention is compared with the prior art structure illustrated in FIG. 1, it will be seen that the prior art construction provides a drive shaft **17** for rotating the counterbalanced crank member **6** with arms **34** and **29** for reciprocating a single thread guiding member **8** which is mounted on a shaft **1**, while the needle bar **10** is reciprocated by the link **9**. However, the thread guiding member **2** of the present invention and its drive are absent from the prior art construction, so that the thread from the spool is directly guided through the stationary thread guide **7** to the thread tensioning device **14**.

Referring again to FIGS. 2 and 5, when the drive shaft **17** is rotated, the crank member **6** turns and since pivot **32** is eccentric to the axis of shaft **17**, the needle bar is reciprocated through the linkage **34, 9** and thread guiding member **8** is reciprocated by link **29**. Such reciprocation will cause thread guide **8** to move up and down between the position shown in FIG. 2 and the position shown in FIG. 5 so that thread is alternately drawn from the thread tensioning device **14** and slackened as shown in FIG. 5 to supply thread to the seam formed by the reciprocating needle **13**.

In accordance with the present invention, cam **5** is driven by shaft **17** in timed relation with the reciprocating motions of thread guiding member **8** and needle bar **10** with needle **13**, so that thread guiding member **2** is simultaneously reciprocated in such a manner that during the downward stroke of thread guiding member **8** toward the thread tensioning device **14**, arm **43** of thread guiding member **2** moves rearwardly away from the stationary thread guide **7** so that the thread portion between thread guide **7** and thread tensioning device **14** is taut, and a new supply of thread is unwound from spool **15**. This movement corresponds to the movement of arm **43** from the position illustrated in solid lines to the position illustrated in chain lines in FIG. 4. During the following up stroke of thread guiding member **8**, thread guiding arm **43** moves forward to the left as viewed in FIG. 4 and toward stationary thread guide **7** so that the thread supplied to the thread tensioning device is slackened. Consequently, thread guiding member **8** pulls thread tensioned only by thread tensioning device **14** and has to provide no force for unwinding the thread from spool **15**. Such force is variable and depends on the size and weight of the spool, and on the friction encountered by the spool on the thread supporting rod **16** and on the surface of the housing. Since in the arrangement of the present invention, the tension of the thread transformed by the needle into a stitch depends only on the tension produced by the thread tensioning device **14**, the stitches are made of thread which is at a constant tension and consequently the stitched material is not gathered or wrinkled, and the seam has a perfect appearance.

It will be understood that each of the elements described above or two or more together, may also find a useful application in other types of thread tensioning arrangements differing from the types described above.

While the invention has been illustrated and described as embodied in a thread guiding member for taking thread from a spool and for supplying it to the thread tensioning device of a sewing machine, it is not intended to be limited to the details shown, since various modifications and structural changes may be made without departing in any way from the spirit of the present invention.

Without further analysis the foregoing will so fully reveal the gist of the present invention that others can by applying current knowledge readily adapt it for various applications without omitting features that, from the standpoint of prior art, fairly constitute essential characteristics of the generic or specific aspects of this invention and, therefore, such adaptations should and are intended to be comprehended within the meaning and range of equivalence of the following claims.

What is claimed and desired to be secured by Letters Patent is:

1. In a sewing machine, in combination, a spool supporting means for rotatably supporting a spool with a thread wound thereon; a needle for receiving a thread supplied from said spool; a tensioning device for frictionally engaging and slidably clamping a portion of said thread intermediate said needle and said spool supporting means; a first reciprocable thread guiding member having a guide means for engaging a first thread portion between said tensioning device and said spool supporting means and being reciprocable so as to draw thread from said spool during a stroke in one direction and to slacken said first thread portion during the opposite return stroke; a second reciprocable thread guiding member having a guide means for engaging a second thread portion between said tensioning device and said needle and being reciprocable so as to draw at least a portion of said first thread portion through said tensioning device during a stroke in one direction and to move the thread toward said needle during the opposite return stroke; and means for reciprocating said first and second thread guiding members in timed relation so that said stroke of said second thread guiding member in said one direction follows said opposite return stroke of said first thread guiding member whereby the thread of said first thread portion is slack when drawn by said second thread guiding member through said tensioning device.

2. A sewing machine as claimed in claim **1** wherein said guide means of each of said thread guiding members is and eye formed in the respective thread guiding member.

3. A sewing machine as claimed in claim **2** wherein said first thread guiding member draws thread from said spool during a rearward stroke and slackens said first thread portion during a forward stroke; wherein said second thread guiding member draws thread from said tensioning device during and upward stroke and supplies thread to said needle during a downward stroke; wherein said tensioning device is located below said first thread guiding member; and wherein the highest point of the reciprocating movement of said second thread guiding member is located above said tensioning device.

4. In a sewing machine, in combination, a thread tensioning arrangement comprising a spool supporting member adapted to support a spool with a wound thread; a needle having an eye for a thread supplied from the spool; a thread tensioning device frictionally engaging and slidably clamping the thread intermediate said spool supporting member and said needle; a first reciprocable

thread guiding member having an eye formed therein engaging a thread portion between said spool supporting member and said thread tensioning device and drawing thread from the spool during a reciprocating stroke in one direction and moving the thread toward said thread tensioning device during a reciprocating stroke in the opposite direction whereby the thread between said first thread guiding member and said thread tensioning device is slackened; a second reciprocable thread guiding member engaging a thread portion between said thread tensioning device and said needle and drawing thread tensioning device during a reciprocating stroke in one direction and moving the thread toward said needle during a reciprocating stroke in the opposite direction; and drive means for reciprocating said first and second thread guiding members in timed relation so that said second thread guiding member performs said stroke in said one direction of its recprocation when sad first thread guiding member has slackened the thread whereby said second thread guiding member draws from said thread tensioning device thread tensioned only by said thread tensioning device whereby the tension of the thread supplied to said needle is substantially constant.

5. In a sewing machine, in combination, a thread tensioning arrangement comprising a spool supporting member adapted to support a spool with a wound thread; a needle having an eye formed therein for a thread supplied from the spool and being reciprocable; a thread tensioning device frictionally engaging and slidably clamping the thread intermediate said spool supporting member and said needle; a first reciprocable thread guiding member having an eye formed therein engaging a thread portion between said spool supporting member and said thread tensioning device and drawing thread from the spool during a reciprocating stroke in one direction and moving the thread toward said thread tensioning device during a reciprocating stroke in the opposite direction whereby the thread between said first thread guiding member and said thread tensioning device is slackened; a second reciprocable thread guiding member engaging a thread portion between said thread tensioning device and said needle and drawing thread from said thread tensioning device during a reciprocating stroke in one direction and moving the thread toward said needle during a reciprocating stroke in the opposite direction; and drive means including a drive shaft, and means connecting said drive shaft to said second thread guiding member and to said needle for reciprocating the same, and a cam on said drive shaft operatively connected to said first thread guiding member for reciprocating the same whereby said needle and said first and second thread guiding members are reciprocated in timed relation so that said second thread guiding member performs said stroke in said one direction of its reciprocation when said first thread guiding member has slackened the thread whereby said second thread guiding member draws from said thread tensioning device thread tensioned only by said thread tensioning device whereby the tension of the thread supplied to said needle is substantially constant.

6. In a sewing machine, in combination, a thread tensioning arrangement comprising a spool supporting member adapted to support a spool with a wound thread; a needle having an eye formed therein for a thread supplied from the spool; a thread tensioning device frictionally engaging and slidably clamping the thread intermediate said spool supporting member and said needle; a support shaft; a first reciprocable thread guiding member mounted on said support shaft for turning movement and having a cam follower arm and a thread guiding arm formed with an eye guiding a thread portion between said spool supporting member and said thread tensioning device and drawing thread from the spool during a reciprocating stroke in one direction and moving the thread toward said thread tensioning device during a reciprocating stroke in the opposite direction whereby the thread between said first thread guiding member and said thread tensioning device is slackened; a second reciprocable thread guiding member engaging a thread portion between said thread tensioning device and said needle and drawing thread from said thread tensioning device during a reciprocating stroke in one direction and moving the thread toward said needle during a reciprocating stroke in the opposite direction; and means including a rotary cam cooperating with said cam follower arm for reciprocating said first thread guiding member, a drive shaft for said cam, and transmission means connecting said drive shaft to said second thread guiding member whereby said first and second thread guiding members are reciprocated in timed relation so that said second thread guiding member performs said stroke in said one direction of its reciprocation when said first thread guiding member performs said stroke in said opposite direction of its reciprocation whereby said second thread guiding member draws from said thread tensioning device thread tensioned only by said thread tensioning device whereby the tension of the thread supplied to said needle is substantially constant.

7. In a sewing machine, in combination, a thread tensioning arrangement comprising a spool supporting member adapted to support a spool with a wound thread; a needle having an eye formed therein for a thread supplied from the spool; a thread tensioning device frictionally engaging and slidable clamping the thread intermediate said spool supporting member and said needle; a support shaft; a first reciprocable thread guiding member mounted on said support shaft for turning movement and having a cam follower arm and a thread guiding arm formed with an eye guiding a thread portion between said spool supporting member and said thread tensioning device and drawing thread from the spool during a reciprocating stroke in one direction and moving the thread toward said thread tensioning device during a reciprocating stroke in the opposite direction whereby the thread between said first thread guiding member and said thread tensioning device is slackened; a second reciprocable thread guiding member mounted on said support shaft for turning movement and having a thread guiding arm formed with an eye holding a thread portion between said thread tensioning device and said needle and drawing thread from said thread tensioning device during a reciprocating stroke in one direction and moving the thread toward said needle during a reciprocating stroke in the opposite direction; and drive means including a rotary cam cooperating with said cam follower arm for reciprocating said first thread guiding member, a drive shaft for said cam, and transmission means including a crank member driven by said drive shaft and a connecting link connected to said crank member and to said second thread guiding member spaced from said eye of the same whereby said first and second thread guiding members are reciprocated in timed relation so that said second thread guiding member performs said stroke in said one direction of its reciprocation when said first thread guiding member performs said stroke in said opposite direction of its reciprocation whereby said second thread guiding member draws from said thread tensioning device thread tensioned only by said thread tensioning device whereby the tension of the thread supplied to said needle is substantially constant.

8. A thread tensioning arrangement as set forth in claim 7 wherein said drive means include a pivot means connecting said crank member with said link.

9. A thread tensioning arrangement as set forth in claim 8 and including means supporting said needle for reciprocating movement, and a linkage including two pivotally connected links, one of said last-mentioned links being pivotally mounted on said pivot means of said crank member.

10. A thread tensioning arrangement as set forth in claim 7 including a stationary thread guide between said first thread guiding member and said thread tensioning device; wherein said first thread guiding member is dis-

posed so that said eye thereof performs a substantially horizontal reciprocating movement toward and away from said thread guids; and means mounting said second thread guiding member in a position in which said eye thereof performs a substantially vertical movement, said thread tensioning device being located below said eye of said second thread guiding member.

11. A thread tensioning arrangement as set forth in claim **7** wherein said first thread guiding member is disposed so that said eye thereof performs a substantially horizontal reciprocating movement; said thread tensioning device being located below said eye of said first guiding member; and a stationary thread guide for guiding the thread portion between said first thread guiding member and said thread tensioning device, and being located substantially at the horizontal level of said eye of said first thread guiding member and in a vertical plane passing through said thread tensioning device.

12. In a sewing machine, in combination, a thread tensioning arrangement comprising a spool supporting member adapted to support a spool with a wound thread; a needle having an eye for a thread supplied from the spool; a thread tensioning device frictionally engaging and slidably clamping the thread intermediate said spool supporting member and said needle; a first reciprocable thread guiding member having an eye formed therein for guiding a thread portion between said spool supporting member and said thread tensioning device and moving in a substantially horizontal plane for drawing in said horizontal plane thread from the spool during a reciprocating stroke in one direction and moving the thread toward said thread tensioning device during a reciprocating stroke in the opposite direction whereby the thread between said first thread guiding member and said thread tensioning device is slackened; a stationary thread guide between said first thread guiding member and said thread tensioning device located in said horizontal plane in relation to said space supporting member that the thread is bent 90° in said eye of said first thread guide member; a second reciprocable thread guiding member engaging a thread portion between said thread tensioning device and said needle and drawing thread from said thread tensioning device during a reciprocating stroke in one direction and moving the thread toward said needle during a reciprocating stroke in the opposite direction; and drive means for reciprocating said first and second thread guiding members in timed relation so that said second thread guiding member performs said stroke in said one direction of its reciprocation when said first thread guiding member has slackened the thread whereby said second thread guiding member draws from said thread tensioning device thread tensioned only by said thread tensioning device whereby the tension of the thread supplied to said needle is substantially constant.

13. In a sewing machine, in combination, a thread tensioning arrangement comprising a spool supporting member adapted to support a spool with a wound thread; a needle having an eye formed therein for a thread supplied from the spool; a thread tensioning device frictionally engaging and slidably clamping the thread intermediate said spool supporting member and said needle; a support shaft; a spring-loaded first reciprocable thread guiding member mounted on said support shaft for turning movement and having a cam follower arm and a thread guiding arm formed with an eye guiding a thread portion between said spool supporting member and said thread tensioning device and moving in a substantially horizontal plane for drawing in said horizontal plane thread from the spool during a reciprocating stroke in one direction and moving the thread toward said thread tensioning device during a reciprocating stroke in the opposite direction whereby the thread between said first thread guiding member and said thread tensioning device is slackened; a stationary thread guide between said first thread guiding member and said thread tensioning device located in said horizontal plane in relation to said space supporting member that the thread is bent 90° in said eye of said first thread guide member; a second reciprocable thread guiding member engaging a thread portion between said thread tensioning device and said needle and drawing thread from said thread tensioning device during a reciprocating stroke in one direction and moving the thread toward said needle during a reciprocating stroke in the opposite direction; and drive means including a rotary cam cooperating with said cam follower arm for reciprocating said first thread guiding member, a drive shaft for said cam, and transmission means connecting said drive shaft to said second thread guiding member whereby said first and second thread guiding members are reciprocated in timed relation so that said second thread guiding member performs said stroke in said one direction of its reciprocation when said first thread guiding member performs said stroke in said opposite direction of its reciprocation whereby said second thread guiding member draws from said thread tensioning device thread tensioned only by said thread tensioning device whereby the tension of the thread supplied to said needle is substantially constant.

References Cited

UNITED STATES PATENTS

1,179,038	4/1916	Rhodes	112—242
1,319,886	10/1919	Merrow	112—242
2,438,636	3/1948	Ivandick	112—241
2,748,731	6/1956	Bell	112—241
1,081,814	12/1913	Korytynski	112—241
1,176,533	3/1916	Forsyth	112—241
1,038,282	9/1912	Butler	112—241
1,467,897	9/1923	Kiewicz	112—241
3,083,661	4/1963	Patrick	112—242

PATRICK D. LAWSON, *Primary Examiner.*

G. KRIZMANICH, *Assistant Examiner.*