June 28, 1932. C. A. EGLI 1,865,179

LAMP STAND

Filed May 18, 1931

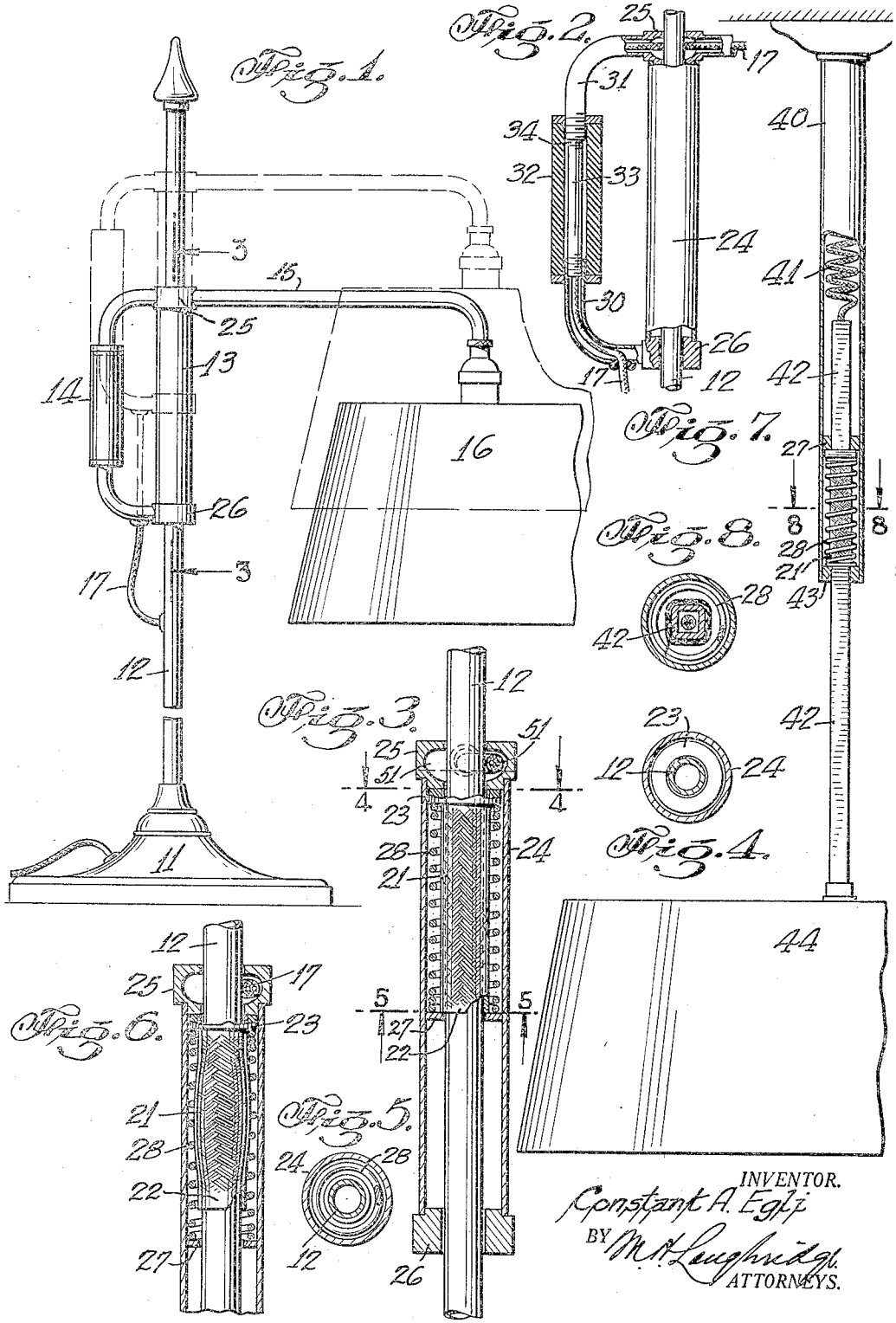

Patented June 28, 1932

1,865,179

UNITED STATES PATENT OFFICE

CONSTANT ARMIN EGLI, OF WEEHAWKEN, NEW JERSEY

LAMP STAND

Application filed May 18, 1931. Serial No. 538,218.

This invention relates to lamp stands and has for an object to provide a lamp stand with an adjustable lamp support; another object is to provide a friction support for a lamp mounted on a stand or a pendant. Other objects of the invention will be understood from the following specification and the accompanying drawing, in which:

Fig. 1 is a side elevation of a lamp embodying my invention;

Fig. 2 is a detail, partly sectioned, of the lamp support shown in Fig. 1;

Fig. 3 is a view showing the frictional engagement between the lamp stand and the lamp support with the housing sectioned;

Fig. 4 is a sectional detail on line 4—4 of Fig. 3;

Fig. 5 is also a sectional detail on line 5—5 of Fig. 3;

Fig. 6 is a view of the frictional lamp support in another position with the housing shown in section;

Fig. 7 is a view, partly sectioned, of a pendent lamp embodying my invention and,

Fig. 8 is a sectional detail on line 8—8 of Fig. 7.

This invention is shown applied to electric lamp stands of the usual type in which a stand supports an arm which carries the lamp and the lamp shade. It is often desirable to adjust the height of this arm and also to leave it free to rotate on the lamp stand and the present invention includes a frictional engagement between the pedestal and the supporting arm, whereby the arm may be readily adjusted in elevation, and, at the same time, remain free to swing around the pedestal.

The form of frictional engagement between the supporting arm and the pedestal referred to, comprises a metallic hose, preferably made of phosphor bronze wire and provided with a flange or collar at one end and soldered or otherwise having the strands united in a solid ring at the opposite end. The hose between these two ends, when stretched, contracts in diameter and when compressed between these two ends expands in diameter. This principle of contraction and expansion of the hose is used to provide the frictional engagement desired between the supporting arm and the pedestal of the lamp which passes through the hose. In practice a spring is provided to bring the hose back to its normal position and to make the device readily adjustable from any position in either direction.

The frictional device referred to is enclosed in a suitable housing between two flanged collars which are attached to an off-set handle by means of which the adjustment can readily be made, and this handle is constructed with a hollow interior to receive the electric conductor for the lamp.

The arrangement described is also applicable to ceiling lights, in which the lamp shade is vertically adjustable to any height and which may be supported by a tube of square section so that the shade itself will not rotate.

Referring to the drawing, 11 is the base of the lamp stand 12 upon which the frictional member 13 is mounted and which connects through the top collar 25 and the bottom collar 26 with the handle 14 and the horizontal supporting arm 15 is secured to the top collar 25 and carries the lamp and shade 16 as illustrated. The flexible electric conductor 17, as illustrated in Fig. 2, connects through the elbow 30, tube 33, elbow 31 and through the annular groove in the top collar 25 as indicated at 51, Fig. 3, to the horizontal tube 15 and to the lamp.

The frictional member 13, as indicated in Figs. 3 and 6, includes the tubular housing 24 extending from the top collar 25 to the bottom collar 26 which slides freely on the stem 12. The top and bottom collars are flanged as shown to engage the ends of tube 24. Upon the stem 12 and located within the housing 24 is the wire hose 21 which has the wire strands at the lower end 22 soldered or brazed into a solid ring and which is provided with a collar 23 at the free end. The tube 24 has fixed therein the collar 27 through which the stem 12 slides freely and upon this collar the coil spring 28 rests at its lower end while the top end engages the collar 23 secured to the hose 21.

When the friction member 13 is raised the spring 28 acting against the collar 23 tends

to elongate the metallic hose 21 and thereby contract its diameter so that its friction against the stem 12 is somewhat increased and thus it resists movement, however, as the stem 12 is smooth and usually polished the friction member 13 can be moved against this friction, but the friction tends to retard initial movement. When the friction member 13 is moved downwards the hose is contracted as indicated in Fig. 6 and the friction against the stem is thereby somewhat lessened, however, as soon as the movement of 13 ceases the hose 21 immediately resumes its normal length by reason of the strands being held rigid at both ends and thus again the normal friction to stabilize the bracket in the adjusted position is automatically restored.

It will be observed, from Fig. 2, that this frictional apparatus is assembled on shoulders on the top collar 25 and the bottom collar 26 which engage the outer tube or housing 24 and the top collar is formed integral with the elbow 31 while the bottom collar is formed integral with the elbow 30 and these elbows are screw connected at 34 by the tube 33 which is enclosed by the handle 14. This provides a construction which is readily assembled and taken apart and may be adjusted for different lengths of housing. It will also be noted that the degree of friction to support the load on the bracket can be varied by varying either the length of the hose 21 or by varying the rigidity of the wire of which the hose is made or both.

The construction in Fig. 7 shows a pendent lamp in which the tube 40 is secured to the ceiling and has enclosed therein in a spiral the electric conductor 41 which is led into the square tube 42. This tube is led out through the square aperture 43 at the end of tube 40 and supports the lamp shade 44. A collar 27 is provided in tube 40 to engage the frictional mechanism, comprising the hose 21 which, in this case, is square in section to correspond with the tube 42 and may be enclosed by a coil spring which is also square in section. The friction hose operates, in this case, similar to that shown in Figs. 3 and 6 and provides a convenient means for raising and lowering the lamp shade without exposing loose wires and without the use of any balancing device to counter-balance the lamp shade. This invention is shown and described in connection with lamp shades, but it should be understood that as an adjustable friction member it is of general use.

Having thus described my invention, I claim:

1. In combination, a lamp stand having a stem and a bracket supporting a lamp, said bracket comprising a handle terminating in a pair of aligned collars through which said stem passes and an arm secured to one of said collars, a metallic hose surrounding said stem, a coil spring surrounding said hose and engaging said hose at one end, a tubular housing for said spring and hose placed between and held in position by said collars, said handle, one of said collars and said arm forming a continuous conduit for an electric conductor associated with said lamp.

2. In combination, a lamp stand having a stem and a bracket supporting a lamp, said bracket comprising a handle terminating in a pair of spaced aligned collars with flanges through which said stem passes freely, a hollow arm secured to one of said collars supporting a lamp socket, a metallic hose with a flange at one end surrounding said stem, a coil spring surrounding said hose and engaging said flange, a tubular housing for said spring and hose having a collar engaging said spring, said housing placed between and held in position by the flanges of said collars, said handle and said arm forming a conduit for an electric conductor to said lamp socket.

In testimony whereof I affix my signature.

CONSTANT ARMIN EGLI.