**PCT** WORLD INTELLECTUAL PROPERTY ORGANIZATION
International Bureau

INTERNATIONAL APPLICATION PUBLISHED UNDER THE PATENT COOPERATION TREATY (PCT)

(51) International Patent Classification 7 : H04R 7/06, 9/06, G06F 1/16 — A1

(11) International Publication Number: **WO 00/02417**

(43) International Publication Date: 13 January 2000 (13.01.00)

(21) International Application Number: PCT/GB99/01974

(22) International Filing Date: 1 July 1999 (01.07.99)

(30) Priority Data:

| | | |
|---|---|---|
| 9814324.1 | 3 July 1998 (03.07.98) | GB |
| 9902578.5 | 6 February 1999 (06.02.99) | GB |
| 9902581.9 | 6 February 1999 (06.02.99) | GB |
| 9902582.7 | 6 February 1999 (06.02.99) | GB |
| 9902579.3 | 6 February 1999 (06.02.99) | GB |
| 9905038.7 | 5 March 1999 (05.03.99) | GB |

(71) Applicant *(for all designated States except US)*: NEW TRANSDUCERS LIMITED [GB/GB]; Ixworth House, 37 Ixworth Place, London SW3 3QH (GB).

(72) Inventors; and

(75) Inventors/Applicants *(for US only)*: AZIMA, Henry [CA/GB]; 3 Southacre Close, Chaucer Road, Cambridge CB2 2TT (GB). MORECROFT, Denis [GB/GB]; 18 Dartmoor Drive, Huntingdon, Cambridgeshire PE18 8XT (GB).

(74) Agent: MAGUIRE BOSS; 5 Crown Street, St. Ives, Cambridgeshire PE17 4EB, PE17 4EB (GB).

(81) Designated States: AE, AL, AM, AT, AU, AZ, BA, BB, BG, BR, BY, CA, CH, CN, CU, CZ, DE, DK, EE, ES, FI, GB, GD, GE, GH, GM, HR, HU, ID, IL, IN, IS, JP, KE, KG, KP, KR, KZ, LC, LK, LR, LS, LT, LU, LV, MD, MG, MK, MN, MW, MX, NO, NZ, PL, PT, RO, RU, SD, SE, SG, SI, SK, SL, TJ, TM, TR, TT, UA, UG, US, UZ, VN, YU, ZA, ZW, ARIPO patent (GH, GM, KE, LS, MW, SD, SL, SZ, UG, ZW), Eurasian patent (AM, AZ, BY, KG, KZ, MD, RU, TJ, TM), European patent (AT, BE, CH, CY, DE, DK, ES, FI, FR, GB, GR, IE, IT, LU, MC, NL, PT, SE), OAPI patent (BF, BJ, CF, CG, CI, CM, GA, GN, GW, ML, MR, NE, SN, TD, TG).

**Published**

*With international search report.*

*Before the expiration of the time limit for amending the claims and to be republished in the event of the receipt of amendments.*

(54) Title: RESONANT PANEL–FORM LOUDSPEAKER

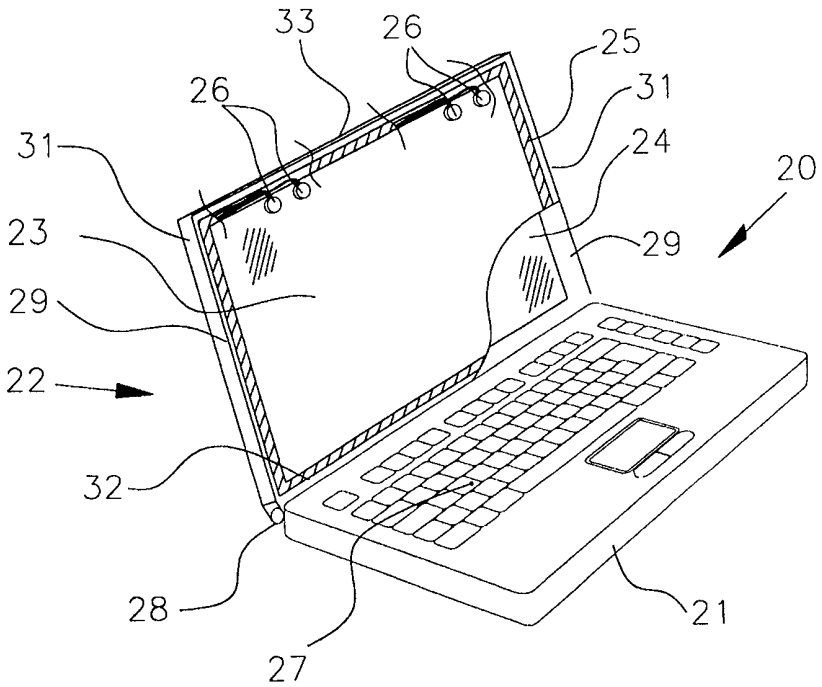


(57) Abstract

A loudspeaker drive unit comprising a visual display screen, a resonant panel–form member positioned adjacent to the display screen and at least a portion of which is transparent and through which the display screen is visible, and vibration exciting means to cause the panel–form member to resonate to act as an acoustic radiator.

*FOR THE PURPOSES OF INFORMATION ONLY*

Codes used to identify States party to the PCT on the front pages of pamphlets publishing international applications under the PCT.

| | | | | | | | |
|---|---|---|---|---|---|---|---|
| **AL** | Albania | **ES** | Spain | **LS** | Lesotho | **SI** | Slovenia |
| **AM** | Armenia | **FI** | Finland | **LT** | Lithuania | **SK** | Slovakia |
| **AT** | Austria | **FR** | France | **LU** | Luxembourg | **SN** | Senegal |
| **AU** | Australia | **GA** | Gabon | **LV** | Latvia | **SZ** | Swaziland |
| **AZ** | Azerbaijan | **GB** | United Kingdom | **MC** | Monaco | **TD** | Chad |
| **BA** | Bosnia and Herzegovina | **GE** | Georgia | **MD** | Republic of Moldova | **TG** | Togo |
| **BB** | Barbados | **GH** | Ghana | **MG** | Madagascar | **TJ** | Tajikistan |
| **BE** | Belgium | **GN** | Guinea | **MK** | The former Yugoslav Republic of Macedonia | **TM** | Turkmenistan |
| **BF** | Burkina Faso | **GR** | Greece | | | **TR** | Turkey |
| **BG** | Bulgaria | **HU** | Hungary | **ML** | Mali | **TT** | Trinidad and Tobago |
| **BJ** | Benin | **IE** | Ireland | **MN** | Mongolia | **UA** | Ukraine |
| **BR** | Brazil | **IL** | Israel | **MR** | Mauritania | **UG** | Uganda |
| **BY** | Belarus | **IS** | Iceland | **MW** | Malawi | **US** | United States of America |
| **CA** | Canada | **IT** | Italy | **MX** | Mexico | **UZ** | Uzbekistan |
| **CF** | Central African Republic | **JP** | Japan | **NE** | Niger | **VN** | Viet Nam |
| **CG** | Congo | **KE** | Kenya | **NL** | Netherlands | **YU** | Yugoslavia |
| **CH** | Switzerland | **KG** | Kyrgyzstan | **NO** | Norway | **ZW** | Zimbabwe |
| **CI** | Côte d'Ivoire | **KP** | Democratic People's Republic of Korea | **NZ** | New Zealand | | |
| **CM** | Cameroon | | | **PL** | Poland | | |
| **CN** | China | **KR** | Republic of Korea | **PT** | Portugal | | |
| **CU** | Cuba | **KZ** | Kazakstan | **RO** | Romania | | |
| **CZ** | Czech Republic | **LC** | Saint Lucia | **RU** | Russian Federation | | |
| **DE** | Germany | **LI** | Liechtenstein | **SD** | Sudan | | |
| **DK** | Denmark | **LK** | Sri Lanka | **SE** | Sweden | | |
| **EE** | Estonia | **LR** | Liberia | **SG** | Singapore | | |

# RESONANT PANEL-FORM LOUDSPEAKER

## DESCRIPTION

### TECHNICAL FIELD

The invention relates to loudspeakers and more particularly to resonant panel-form loudspeakers and panel-form loudspeaker drive units either alone or when integrated with another article, e.g. a picture frame, display cabinet, visual display screen, mirror and the like incorporating translucent or transparent glass-like panels, or laptop and the like personal computers including personal organisers, hand-held and the like computers having a display screen or hand-held and the like telephone receivers, e.g. mobile telephones having a display screen, and to modules comprising a display screen which can be driven as a loudspeaker for incorporation into an article such as those set out above.

Such resonant panel-form loudspeakers are generally described in International patent application WO97/09842, and have become known as distributed mode (or DM) loudspeakers (or DML).

## BACKGROUND ART

It is known to suggest driving the transparent face of a wristwatch to act as a buzzer or sounder i.e. to emit simple sound tones, e.g. to act as an alarm for the wearer of the wristwatch.

It is among the objects of the invention to provide a resonant transparent panel-form member which can be driven as a loudspeaker, e.g. to reproduce speech or music.

It is another object of the invention to enhance the functionality of a resonant panel loudspeaker to enable direct user input.

## DISCLOSURE OF INVENTION

According to the invention a loudspeaker drive unit comprises a display screen, a resonant panel-form member, at least a portion of which is transparent and through which the display screen is visible and vibration exciting means to cause the panel-form member to resonate to act as an acoustic radiator.

From one aspect the invention is a display screen module e.g. for a visual display unit (VDU), comprising a display screen, a resonant panel-form member, at least a portion of which is transparent and through which the display screen is visible and vibration exciting means to cause the panel-form member to resonate to act as an

acoustic radiator or loudspeaker.

From another aspect the invention is an article of the nature of a picture frame or holder, display cabinet, visual display apparatus, mirror or the like having an article area or surface to be viewed, comprising a resonant panel-form member, at least a portion of which is transparent or translucent through which the display area or surface or article is visible, or at least through which light from the display area is transmittable and vibration exciting means to cause the panel-form member to resonate to act as an acoustic radiator or loudspeaker.

From another aspect the invention is a telephone receiver or the like, e.g. a mobile telephone or cell phone, comprising a display screen, a resonant panel-form member, at least a portion of which is transparent and through which the display screen is visible and vibration exciting means to cause the panel-form member to resonate to act as an acoustic radiator or loudspeaker.

The resonant panel-form member may be of rigid plastics, e.g. polystyrene or may be of glass or other rigid transparent material.

More than one vibration exciting means may be provided to apply bending wave energy to the panel-form member to cause it to resonate to produce an acoustic output. Such plural vibration exciters may be driven with the same signal to give a monaural output or may be driven separately to provide multi-channel, e.g. stereo, output. The or each drive means may be mounted to an edge or

marginal portion of the panel-form member or to a portion of the panel-form member outside its transparent portion. The marginal mounting may be as described in International patent application PCT/GB99/00143, see Annex A. The vibration exciters may be mounted in pairs to an edge or marginal portion or to opposite edges or marginal portions of the panel-form member or to other portions of the member outside its transparent portion. The or each vibration exciter may be coupled directly to the panel-form member. The vibration exciters may be electrodynamic or piezoelectric. The vibration exciters may comprise an inertial device or may be partly or fully grounded. The exciter(s) may be resiliently supported e.g. on an associated frame member, e.g. the lid of the laptop computer. The panel-form member may be resiliently supported on the frame along one or more edges. Thus, where the panel is rectangular, the resilient suspension may extend along three adjacent edges and the exciter(s) may be provided on the fourth edge. Alternatively all four edges of the panel may be resiliently supported.

The vibration exciters may alternatively or additionally comprise a piezoelectric (e.g. of PVDF or PLZT material) or an electret film, e.g. a transparent piezoelectric or an electret film. The piezoelectric or electret material may be laminated or fused or otherwise bonded or embedded onto or into a part or the whole of the panel-form member, whether of glass, plastics or a composite of glass and plastics. Transparent conductors

may also be provided on or in the panel to energise the vibration exciters.

The loudspeaker or loudspeaker drive unit may be of the general kind described in International patent application number WO97/09842. Thus the loudspeaker may comprise a member capable of sustaining and propagating input vibrational energy by bending waves in at least one operative area extending transversely of thickness to have resonant mode vibration components distributed over said at least one area and having a vibration exciter mounted on said member to vibrate the member to cause it to resonate forming an acoustic radiator which provides an acoustic output when resonating.

One or more marginal portions of the panel-form member may be clamped or restrained. The whole periphery of the panel-form member may be mechanically clamped.

The panel-form member may be mounted in means enclosing one face of the panel-form member whereby acoustic radiation from the said one face is at least partly contained within the enclosure or cavity, in the manner of an infinite baffle loudspeaker. The enclosure or cavity may be such as to modify the modal behaviour of the panel as described in International patent application PCT/GB99/01048, see Annex B.

The panel-form member may form the face of a visual display unit or the like, e.g. the outer transparent protective surface of or over the visual display screen, e.g. a liquid crystal display or plasma display of a lap-

top or the like computer. A polymer-film liquid crystal display may be bonded or otherwise mounted on or integrated with the panel-form member, whereby the loudspeaker and visual display functions are integrated.

The resonant panel-form member may have a user-accessible surface and means on or associated with the surface and responsive to user contact. The user responsive means may act as a touch control means, e.g. whereby the user can enter instructions or provide information, e.g. to apparatus associated with the loudspeaker.

Thus for example the loudspeaker may form a control panel, e.g. for a vending machine of the kind described in International patent application WO97/09842, or may control operation of a computer.

The user responsive means may comprise visible or invisible areas, delineated by printing or labelling as required or if visible by a contact or metallisation, which may use capacitative or conductive or alternative methods of sensing the immediate presence or contact by a person, finger etc. Pressure switches may also be attached to the surface or embedded within. For both transparent and translucent speaker types these and other well-known methods may be used.

The resonant speaker panel may also be combined with other methods for sensing which include matrices of light emitting devices and receptors, e.g. photodiodes and/or photocells round the perimeter of the panel and which

sense the position, e.g. of a finger directed at a point on the panel.

Where metallised contacts are used these may be of the metal oxide film or thin metal film type and may thereby be rendered transparent if required, including the related wiring. Thus both the contact areas and the connective wiring to the edge of the panel may be designed so as not to impair the optical properties of the panel.

Applications include touch screen control for transparent computer and video display resonant panel loudspeakers, for translucent display and lighting resonant panel speakers, and for automated ticket machine (ATM) and vending machine applications. Many other categories are indicated for example in consumer electronics such as a speaking or sound informing resonant touch panel for a remote control unit, whether illuminated or not, or applied to a mobile telephone display of suitable area, or combining a display, a loudspeaker and a control panel with illumination. With the development of mobile video telephones the concept offers further engineering value with the transparent touch type speaker panel also forming part of the video display assembly or associated design.

User feedback of control settings *via* the resonant speaker panel with incorporated switch buttons would find utility in the control sections of hi-fi and audio equipment, particularly where complex setting up is required for example in home theatre systems.

Also domestic appliances, e.g. dishwashers, washing machines would benefit from the addition of this technology, as would industrial instrumentation, display orientated instructions such as analysers and oscilloscopes.

The invention could be applied to laptop and other computer controls, points of sales data systems, personal, stock control and labelling devices, and also to automotive navigation units, dashboard displays with a 'window' comprising a resonant panel speaker design, point of sale products with sound output and facility for user/customer data entry or control of operational information, and similarly for educational display units for museums, zoos etc, interactive audio visual devices.

## BRIEF DESCRIPTION OF DRAWINGS

The invention is diagrammatically illustrated, by way of example, in the accompanying drawings, in which:-

Figure 1 is a perspective view of a laptop computer with the lid raised to show a computer keypad and a display screen;

Figure 2 is a partial cross-sectional view through the lid of the laptop computer of Figure 1;

Figure 3 is a perspective view of a mobile radio telephone or cell phone having a keypad and a display screen;

Figure 4 is a partial longitudinal cross-sectional view through the mobile telephone of Figure 1;

Figure 5 is an exploded perspective view of a picture

frame assembly intended for wall mounting and combined with a loudspeaker;

Figure 6 is a perspective view of a display case, e.g. for a shop or museum incorporating a loudspeaker and partly broken-away to show hidden detail;

Figures 7a and 7b are partial scrap cross-sectional views through the picture frame assembly of Figure 5 and the display case of Figure 6 respectively;

Figure 8 is a perspective view of a display screen module which integrates the functions of the display screen with that of a loudspeaker;

Figure 9 is a cross-sectional view through the module of Figure 8;

Figure 10 is a perspective view of a vending machine incorporating a combined loudspeaker/display screen of the present invention;

Figure 11 is a perspective view of a visual display unit such as a television incorporating the combined loudspeaker/display screen of the present invention;

Figure 12 is a perspective view of a laptop computer generally of the kind shown in Figure 1 and in which the display screen comprises a touch pad;

Figure 13 is a perspective view of a mobile telephone generally of the kind shown in Figure 3 and in which the display screen comprises a touch pad;

Figure 14 is a partial cross-sectional side view of a combined resonant panel loudspeaker and touch pad;

Figures 15 and 16 are respectively an exploded

perspective view and a cross-sectional side view of a module generally as shown in Figures 8 and 9 and comprising a touch pad, and

Figure 17 is a partial diagrammatic perspective view of display screen/loudspeaker drive unit applied to a television.

BEST MODES FOR CARRYING OUT THE INVENTION

In Figures 1 and 2 of the drawings a laptop computer 20 comprises a body 21 having a keypad 27 and a lid 22 hinged at 28 to the body to overlie the keypad when closed and to disclose a visual display screen 23 when raised or opened as shown. In Figure 1, the lid is shown partly broken away to reveal hidden detail.

The laptop lid 22 is formed with a surrounding peripheral lip 29 to define a shallow container or enclosure 30 in which is mounted a liquid crystal display (LCD) screen 23 visible through a rectangular transparent protective cover 24 in the form of a resonant panel-form member, e.g. of the general kind described in WO97/09842, suspended in the lid along all four edges, i.e. the two side edges 31 the top edge 33 and the bottom edge 32, by means of an interposed resilient suspension 25, e.g. of foamed rubber strip. Two pairs of moving coil inertial vibration exciters 26 are mounted on the top edge 33 of the panel-form cover 24 near to the sides 31 to drive the panel to resonate to act as a loudspeaker and the exciters are supported on resilient suspensions 34, e.g. of foamed rubber, fixed to the lid. The exciters are hidden behind a

return flange 35 of the peripheral lip 29 and thus are invisible in use.

Although the pairs of exciters are shown attached to the top edge of the panel, it might be preferable, where multi-channel, e.g. stereo, audio operation is required, to separate the pairs of exciters still further by mounting them on opposite sides of the panel, to provide better stereo separation.

The transparent panel-form member 24 may be of polystyrene, polycarbonate or similar or a composite of glass and plastics, e.g. a plastics or aerogel core with glass skins. Where the panel-form member has a plastics face, it may be given a scratch resistant coating.

In Figures 3 and 4 of the drawings a mobile radio telephone or cell phone 40 comprises a casing 41 containing, in conventional fashion, a radio transmitter and receiver (not shown), an aerial 42 projecting from the casing for sending and receiving radio signals, a display screen 43 mounted in the casing, a keypad 44 in the casing adjacent to the display screen and through which the device is operated, and a microphone 49.

As shown in Figure 4 the casing 41 is formed with an aperture defined by a surrounding peripheral lip 45 below which is mounted the display screen generally indicated by reference 43, and comprising e.g. a liquid crystal display (LCD) 51, which is visible through a rectangular transparent protective cover 46 in the form of a resonant panel-form member which covers the aperture and which is

suspended in and sealed to the casing along its periphery by means of resilient suspension e.g. of foamed rubber strip 47 interposed between the inner face of the lip 45 and the peripheral margin of the panel-form member 46. An inertial moving coil vibration exciter 48 is mounted on the top edge of the transparent panel-form cover member to drive the panel to resonate to act as a loudspeaker in the general manner taught in WO97/09842. The exciter 48 is supported on a resilient suspension 50, e.g. of foamed rubber, fixed to the casing. The exciter is hidden behind the peripheral lip 45 of the aperture in the casing and thus is invisible in use. The transparent panel-form member may be of polystyrene, polycarbonate or similar or a composite of glass and plastics, e.g. a plastics or aerogel core with glass skins. Where the panel-form member 46 has a plastics face, it may be given a scratch resistant coating.

It is intended that the loudspeaker may be used normally, i.e. with the loudspeaker placed adjacent the user's ear for privacy, or with the volume raised as a 'hands free' telephone. A mechanical buzzer, i.e. a no-sound alert, may be incorporated in the loudspeaker. Such a buzzer may utilise the vibration exciter 48 or may be a separate device.

Figure 5 shows a wall hanging picture or photograph frame assembly 60 comprising a rectangular front frame 61 having a hanging wire 68 adapted to engage a wall hook to support the picture in position, and a rectangular

transparent panel-form member 62 forming a protective cover over a picture 63. As can be seen from Figure 7a, the front frame 61 is formed with a surrounding peripheral lip 64 defining an aperture through which the picture/photograph 63 or the like is visible through the transparent protective cover 62 which is in the form of a resonant panel-form member resiliently suspended in the frame 61 along its periphery by means of an interposed resilient suspension 65, e.g. of foamed rubber strip. A back frame 67 mates with the front frame 61 and carries a second resilient suspension 65 whereby the periphery of the panel 62 is supported from both sides. The back frame 67 carries a picture back 69 on which the picture 63 is mounted in any convenient fashion.

Two moving coil inertial vibration exciters 66 are mounted on the top edge 67 of the panel-form cover member to drive the panel to resonate to act as a loudspeaker. The exciters are hidden behind the peripheral lip 64 and thus are invisible in use. The panel-form member may be of transparent polystyrene, polycarbonate or similar or a composite of glass and plastics, e.g. a plastics or aerogel core with glass skins. Where the panel-form member has a plastics face, it may be given a scratch resistant coating. With this arrangement the picture may easily be changed when desired.

Although the arrangement of Figure 5 is intended for wall mounting, it will be appreciated that the picture/photograph frame assembly 60 could, if desired, be

made to be free-standing with the addition of a generally conventional rear stand.

Figure 6 shows a free-standing display cabinet 70 which is generally cuboid and comprises a plinth 71, a top 72, and four transparent display windows 73, one on each side of the cabinet, extending between the plinth and top. In this cabinet one or more, e.g. all four, windows 73 can be arranged to act as resonant panel-form loudspeakers with the aid of vibration exciters 74, substantially in the manner described in WO97/09842.

The display cabinet 70 of Figures 6 and 7b is constructed and functions in much the same manner as is shown in Figures 5 and 7a with respect to the picture frame assembly 60. Thus the rectangular resonant transparent panel-form member 73 is resiliently suspended between foam rubber or the like strips 75 in the top 72 and plinth 71 of the cabinet and inertial vibration exciters 74 are mounted on the panel 73 behind a flange 79 on the top 72 so as to be hidden thereby. The transparent panels can thus be driven to resonate to act as loudspeakers, e.g. to add an audio element to the display of goods or an artefact in the cabinet.

The transparent panel 73 may be constructed as described above.

Figure 8 and 9 of the drawings show a module 80 comprising a visual display screen and a resonant panel-form loudspeaker generally of the kind described with reference to the embodiment of Figures 1 and 2 above. In

this case the module 80 is intended to form a self-supporting unit which can be manufactured for later assembly to form a finished article, e.g. a television, VDU or the like. The module comprises a generally rectangular frame 82 which may be of lightweight pressed metal, in or on which is rigidly mounted a visual display screen 81, e.g. a liquid crystal display, and over which screen 81 is resiliently suspended a rectangular transparent resonant panel-form member 83. The panel-form member 83 is suspended on a peripheral resilient strip 87 of foam rubber or the like supported on the frame 82. A resilient seal/suspension 85 e.g. of foam rubber strip is interposed between the edge of the screen 81 and the panel 83 to form a cavity 86 therebetween. Vibration exciters 87 are mounted on the peripheral margin of the panel 83 at positions outside the area of the screen 81 to excite the panel to resonate to act as a loudspeaker.

Figure 10 illustrates a vending machine 90 comprising a cabinet 91 having control panel 92 and a delivery or dispensing chute 93. The control panel 92 comprises a combined visual display and audio module 80 as described above in relation to Figures 8 and 9 to facilitate the functioning of the vending machine, and may also comprise additional functions as described below.

Figure 11 shows a visual display device 100 comprising a cabinet 101 housing a combined visual display/loudspeaker module 80 as described above in relation to Figures 8 and 9, the cabinet 101 having

generally conventional control buttons or knobs 102. The opposite sides of the transparent panel 83 forming the front cover over the display screen are formed with areas a to f respectively which are touch pads whereby the user can control the functioning of the device 100 simply by touching the appropriate pad.

Figures 12 to 16 show how touch pads can be applied to previously described embodiments of the invention. Thus Figure 12 shows touch pads o,p applied to the screen of a laptop computer 20, while Figure 13 shows touch pads h to m applied to the screen of a mobile telephone 40.

Figure 14 is a cross-sectional sketch showing the touch pads on a resonant panel.

Figures 15 and 16 show touch pads 88 applied to the resonant panel of a module 80 of the kind shown in Figures 8 and 9.

Figure 17 shows how the present invention can be applied to a cathode ray tube or plasma screen television 110. It is to be noted that only the salient features of the invention are shown in the drawings. The case or cabinet of the television is omitted in the interests of clarity although the case or cabinet will function support the combined visual display 111 and loudspeaker, much as the lid of the laptop computer of Figures 1 and 2 functions to support the display/loudspeaker.

As shown in the drawing, a rectangular resonant panel 112 is disposed in front of the visual display 111 and the panel 112 is formed with a transparent window 114 having

rounded corners 114. Vibration exciters 115 are disposed on the marginal portions of the panel 112 outside the window 113, and on opposite sides thereof. Touch pads 116 are positioned along the lower edge of the window. If desired the portion of the panel-form member outside the window may act as a mask to hide associated componentry, or a separate mask may be positioned over the panel-form member.

The invention thus provides an assembly combining the functions of a visual display and loudspeaker(s) which enables the manufacture of a thin, space-efficient VDU or television or the like.

**REF: P.5952 WOP**

**ANNEX A**

**PCT/GB99/00143**

TITLE: ACTIVE ACOUSTIC DEVICES

DESCRIPTION

FIELD OF THE INVENTION

This invention relates to active acoustic devices and more particularly to panel members for which acoustic action or performance relies on beneficial distribution of resonant modes of bending wave action in such a panel member and related surface vibration; and to methods of making or improving such active acoustic devices.

It is convenient herein to use the term "distributed mode" for such acoustic devices, including acoustic radiators or loudspeakers; and for the term "panel-form" to be taken as inferring such distributed mode action in a panel member unless the context does not permit.

In or as panel-form loudspeakers, such panel members operate as distributed mode acoustic radiators relying on

bending wave action induced by input means applying mechanical action to the panel member; and resulting excitation of resonant modes of bending wave action causing surface vibration for acoustic output by coupling to ambient fluid, typically air. Revelatory teaching regarding such acoustic radiators (amongst a wider class of active and passive distributed mode acoustic devices) is given in our International patent application WO97/09842; and various of our later patent applications concern useful additions and developments.

BACKGROUND TO THE INVENTION

Hitherto, transducer locations have been considered as viably and optimally effective at locations in-board of the panel member to a substantial extent towards but offset from its centre, at least for panels that are substantially isotropic as to bending stiffness and exhibit effectively substantially constant axial anisotropy of bending stiffness(es). Aforementioned WO97/09842 gives specific guidance in terms of optimal proportionate co-ordinates for such in-board transducer locations, including alternatives; and preference for different particular co-ordinate combinations when using two or more transducers.

Various advantageous applications peculiar to the panel-form of acoustic devices have been foreshadowed, including carrying acoustically non-intrusive surfacing sheets or layers. For example, physically merging or incorporating into trim or cladding is feasible, including

as visually virtually indistinguishable. Also, functional combination is feasible with other purposes, such as display, including pictures, posters, write-on/erase boards, projection screens, etc. The capability effectively to hide in-board transducers from view is enough for many applications. However, there are potential practical applications where it could be useful to leave larger, particularly central, panel regions unobstructed even by hideable transducers. For example, for video or other see-through display use, pursuit of translucence, even transparency, of panel members is not worthwhile with such in-board intrusions of transducers, though a panel-form acoustic device would be highly attractive if it could afford large medial areas of unobstructed visibility.

SUMMARY OF THE INVENTION

According to one device aspect of this invention, there is provided a panel-form acoustic device comprising a distributed mode acoustic panel member with transducer means located at a marginal position, the arrangement being such as to result in acoustically acceptable effective distribution and excitement of resonant mode vibration. Existence of suitable such marginal positions is established herein as locations for transducer means, along with valuable teaching as to judicious selection or improvement of one or more such locations. Such judicious selection may advantageously be by or as would result from investigation of an acoustic radiator device or

loudspeaker relative to satisfactorily introducing vibrational energy into the panel member, say conveniently by assessing parameters of acoustic output from the panel member concerned when excited at marginal positions or locations. At least best results also apply to microphones.

From the relevant background teaching as of the time of this invention, availability of successful such marginal locations is, to say the least, unexpected. Indeed, main closest prior art cited against WO97/09842, is the start-point for its invention and revelatory teaching, namely WO92/03024 from which progress was made particularly in terms of departing from in-corner excitation thereof. Such progress involved appreciating that distributed resonant mode bending wave action as required for viable acoustic performance results in high vibrational activity at panel corners; as is also a factor for panel edges generally. At least intuitively, and as greatly reinforced by practical success with somewhat off-centre but very much in-board transducer locations, such high vibrational activity compounds strongly with panel margins self-evidently affording limited access, thus likely available effect upon, panel member material as a whole; this compounding combination contributing to previously perceived non-viability of edge excitation.

For application of this invention, a suitable acoustic panel member, or at least region thereof, may be

transparent or translucent. Typical panel members may be generally polygonal, often substantially rectangular. Plural transducer means may be at or near different edges, at least for substantially rectangular panel members. The or each transducer may be piezo-electric, electrostatic or electro-mechanical. The or each transducer may be arranged to launch compression waves into the panel edge, and/or to deflect the panel edge laterally to launch transverse bending waves along a panel edge, and/or to apply torsion across a panel corner, and/or to produce linear deflection of a local region of the panel.

Assessment of acoustic output from panel members may be relative to suitable criteria for acoustic output include as to amount of power output thus efficiency in converting input mechanical vibration (automatically also customary causative electrical drive) into acoustic output, smoothness of power output as measure of even-ness of excitation of resonant mode of bending wave action, inspection of power output as to frequencies of excited resonant modes including number and distribution or spread of those frequencies, each up to all as useful indicators. Such assessments of viability of locations for transducer means constitute method aspects of this invention individually and in combination.

As aid to assessment at least of smoothness of power output, it is further proposed herein to use techniques based on mean square deviation from some reference. Use

of the inverse of mean square deviation has the benefit of presenting smoothness for assessment according directly to positive values and/or representations. A suitable reference can be individual to each case considered, say a median-based, such as represented graphically by a smoothed line through actual measured power output over a frequency range of interest. It is significantly helpful to mean square deviation assessment for the reference to have a be normalised standard format; and for the measured acoustic power output to be adjusted to fit that standard format. The standard format may be a graphically straight line, preferably a flat straight line thus corresponding to some particular constant reference value; further preferably the same line or value as found naturally to apply to a distributed mode panel member at higher frequencies where modes and modal action are more or most dense.

In this connection it is seen as noteworthy that whatever function is required for such normalising to a substantially constant reference is effectively also a basis for an equalisation function applicable to input signals to improve lower frequency acoustic output. It is the case that viable distributed mode panel members as such, and with preferential aspect ratios and bending stiffness(es) as in our above patent application, may naturally have acoustic power output characteristics relative to frequency that show progressive droops towards and through lower frequencies where resonant modes and

modal action are less dense - but, as their frequency distribution as such is usually beneficial to acoustic action in such lower frequency range, such equalisation of input signal can be useful. This lower acoustic power output at lower frequencies is related to free edge vibration of the panel members as such, and consequential greater loss of lower frequency power, greater proportion of which tends to be poorly radiated and/or dissipated, including effectively short-circuited about free adjacent panel edges. As expected, these lower frequency power loss effects are significantly greater for panel members with transducer locations at or near their edges and/or lesser stiffnesses - compared with panel members using in-board transducer locations. However, and separately from any input signal equalisation, significant mitigation of these effects is available by mounting the panel members surrounded by baffles and/or by clamping at the edges of the panel members. Indeed, spaced localised edge clamps can have usefully selectively beneficial effects relative to frequencies with wavelengths greater than the spacing of the localised edge clamps.

Interestingly, for specific panel members of quite high stiffnesses, viable marginal transducer locations include positions having edge-wise correlation with normally in-board locations for transducer means arising as preferred by application of teachings or practice such as specifically in our above patent applications. When using transducer means in pairs, a first preference was

found for marginal transducer locations with said correlation as corresponding to notionally encompassing greatest area. For a substantially rectangular panel member, said correlation can be by way of correspondence with orthogonal or Cartesian co-ordinates, with said first preference represented by associating transducer means with diagonally opposite quadrants. However, this was in relation to a particularly high stiffness/high-Q panel member, and is not always true, even for quite (but less) stiff panels, see further below showing promising operation with association in some or adjacent quadrants.

For an elliptical panel member said correlation/ correspondence can be according to hyperbolic resonant mode related lines as going edge-wards through the in-board locations. Other variously less good, but feasibly viable, pairs of edge locations for transducer means were found by investigation based on rotating orthogonal vectors about in-board preferential transducer locations, including close to or at corner positions of panel members. Another inventive aspect regarding corner or near-corner excitation involves suitably mass-loading or clamping substantially at a known in-board optimal or preferential drive location, where it appears that such mass-loaded optimal drive location(s) effectively behave(s) to some useful extent as "virtual" source(s) of bending wave vibrations in the member. This latter may not avoid central intrusion by the mass loading but is clearly germane to successful marginal excitation at

corners.

Further investigations have been made, including of panel members having different stiffnesses, specifically again quite high but also much lower and intermediate stiffness panels, in each case of usual substantially rectangular configuration with aspect ratios and axial bending stiffnesses generally as in WO97/09842.

For the higher stiffness panel member, assessment based on smoothness of power output for single transducer locations along longer and shorter edges were generally confirmatory of above preferential coordinate positions, i.e. peaking as expected for best locations for single transducer means. However, additionally, longer edges had promising spreads of smoothness measure within about 15% of peak at transducer locations between the co-ordinate positions in each half of the edge and beyond those co-ordinate positions to about one-third length from each corner; and within about 30% along to at least the quarter length positions. For the shorter edges, spreads of smoothness measure were within about 10% between the co-ordinate positions, and within about 25% at quarter length positions. The shorter edges actually showed a better power smoothness measure than the longer edges showed at quarter length positions right through to within about one-tenth length of the corners.

Investigation of combinations of two transducers has also been extended particularly for same and adjacent quadrants with one transducer, for one on each of longer

and shorter edges. One transducer can be at one best position along one of the edges for a single transducer, with the other transducer varied along the other edge. For variation along the shorter edge, above preference for one of positions according to co-ordinates of in-board preferential transducer locations is confirmed by best smoothness measure at about six-tenths length. There are also near as good positions at three-quarter length and only a little less good at quarter and third length positions. Moreover, most positions other than below about one-tenth from a corner are better, similar, near as good, or not much worse, than for association with co-ordinates of preferred in-board locations in the same quadrant. For variation along the longer edge, the shorter edge transducer was located at about preferred near six-tenths position, there was then actually marked preference for combinations of transducer locations in adjacent quadrants, with best at just under one-fifth, and slightly better than the 0.42 position at the one-third length position with only a little worse at the one-tenth length position. The quarter length position is actually about the same as for the mid-length position and the adjacent quadrant position of the co-ordinate of preferred in-board location. Self-evidently, these procedures may be continued on an iterative basis, and may then reveal more favourable combinations.

Investigations of much lower stiffness panel members on the basis of smoothness of power output have shown

peaking for marginal transducer locations also at about the in-board co-ordinate position, but near as good at quarter length of panel edges, and generally markedly less criticality as to position along the edges in terms of actual achieved modal distribution. This is seen as explicable by interaction between the lower panel stiffness and compliance within the used transducer itself. It appears that the resonant modal distribution of the panel is affected and altered by the transducer location, at least to some extent going with such location. Higher panel stiffnesses substantially avoid such effects. However, such in-transducer compliance and possible interaction with panel stiffness/elasticity is clearly another factor to be taken into account, including exploited usefully.

Investigations of panel members with quite high and much lower stiffnesses clearly reveal rather different cases for application of marginal excitation, including as to more and less criticality as to transducer locations, whether singly or in pairs, and as to less or more interaction with in-transducer compliance. It is thus appropriate to consider a panel member of intermediate stiffness.

For such intermediate stiffness panel member, and much as expected, differences relative to the much lower stiffness panel member include increase in acoustic power output available by edge clamping, markedly increased power for mid-range frequency modes, and stronger modality

or peakiness for lower-frequency modes. Tendency towards characteristics of the higher stiffness panel member include stronger preference as best single transducer locations for edge positions on a co-ordinate of optimal in-board transducer locations, also promising feasibility for through the mid-point, but perhaps also at about one-tenth in from corners. For two marginally located transducer means, marked preference resulted for the co-ordinate related position of optimal in-board transducer location, with less good but likely viable spread to middle and two-thirds length positions and equality of same quadrant co-ordinate related and two-thirds length positions.

It is evident that differences in materials parameters of panel members beyond basic capability to sustain bending wave action are significant in determining marginal transducer locations; and that use of two or more such transducer locations produces highly individual solutions requiring experimental assessment such as now enabled by teachings hereof.

Also, at least specifically for tested substantially rectangular panel members, it has been found that many if not most, probably going on all, of edge or near-edge locations for transducer means that are unpromising as such can be significantly improved (as to bending wave dependent resonant mode distribution and excitement into acoustical response of the member) if associated with localised mass-loading or clamping at one or more selected

other marginal position(s) of the panel member concerned. Inventive aspects thus includes association of a said drive means position with helpful other mass-loading or clamping position marginal of the panel member.

Regarding use of two or more transducer means, exhaustive investigation of combinations of marginal locations is impractical, but teaching is given as to how to find best and other viable marginal locations for second transducer means for any given first transducer marginal location. Indeed, yet further marginal transducer locations could be investigated and assessed according to the teaching hereof. Somewhat likewise, use of localised marginal damping for improving performance for any given transducer marginal location is investigatable and assessable to any extent and number using the teaching hereof, whether for enhancing or reducing contributions of some resonant mode(s), otherwise deliberately interfering with other resonant mode(s), or mainly to increase output power.

It believed to be worthwhile generally to take into account the fact that lowest resonant modes are related to length of the longest natural axis of any panel member, thus that longer edges of substantially rectangular panel members are sensibly always favoured for location of transducer means, including doing so wherever feasible at the best position for operation with single transducer means. It is sensible to see this as applying even where use of another transducer means is encouraged or intended,

again whether for enhancing some resonant mode(s), deliberately interfering with other resonant mode(s) or mainly to increase output power.

Also relevant as a general matter is the fact that the operating frequency range of interest should be made part of assessment of location for transducer means, and may well affect best and viable such locations, i.e. could be different for ranges wholly above and extending below such as 500 Hz. Another influencing factor could be presence of an adjacent surface, say behind the panel member at a spacing affecting acoustic performance.

It is inferred or postulated that the nature of preferred said edge or edge-adjacent position(s) tend towards what is fore-shadowed in our above PCT and other patent applications, typically viewed as affording coupling to more approaching most frequency modes, and doing so more rather than less evenly, perhaps typically avoiding dominance of up to only a few frequency modes. Such suitability may be for lower rather than higher total actual vibrational energy locally in the panel member, but high as to population by frequency modes, i.e. rather than "dead" in the sense of little or no coupling to any or few modes.

BRIEF DESCRIPTION OF THE DRAWINGS

Specific implementation for the invention is now diagrammatically illustrated and described in and with reference to by way of example, in the accompanying drawings, in which:-

Figure 1 shows a distributed mode acoustic panel with a fitted transducer as generally described in the above PCT application;

Figure 2 shows outline indication of four different ways of marginal or edge excitation an acoustic panel;

Figure 3 shows possible placements of transducers marginally of an acoustic panel to achieve actions shown in Figure 2, and Figure 3A shows transparent such panel;

Figure 4 shows four favoured marginal locations for transducers shown in outline, relative to an in-board location of Figure 1 shown in phantom;

Figure 5 shows the same four favoured locations relative to another preferential in-board drive location and favoured pair of the complementary or phantom in-board drive location;

Figure 6 indicates how any pairs and all four drive transducers at such favoured locations were connected for testing;

Figure 7 shows viable if less favoured pairs of marginal drive transducer locations;

Figure 8 shows corner drive position and helpful mass-loading at an in-board preferential drive location;

Figures 9 and 9A show four normally unfavoured marginal drive transducer locations together with many marginal mass-loading or clamping positions and how test masses and drive transducers were associated with the panel; and

Figure 10 shows in-board area unobstructed within

marginal positions for drive transducer(s), clamp termination(s) and resilient suspension/mounting.

Figures 11A, B are graphs of output power/frequency for a substantially rectangular panel member of quite high stiffness and single transducer positions along longer and shorter edges;

Figures 12A, B are related bar charts for measures of smoothness of output power;

Figures 13A, B are graphs of output power/frequency for two transducer positions with one varied along shorter or longer edges;

Figures 14A, B are related bar charts for measures of smoothness of output power;

Figures 15A, B are output power/frequency graphs and related power smoothness bar chart for a panel member of much lower stiffness and single transducer positions along the longer edge;

Figures 16A, B are output power/frequency graphs and power smoothness bar chart for second transducer positions along the shorter edge;

Figure 17 shows comparison of power outputs with transducers located preferentially in-board and at edge for the low stiffness panel member;

Figures 18A, B, C show effects of baffling, three-edge clamping and both;

Figures 19A, B are output power/frequency graphs and related power smoothness bar chart for the low stiffness panel member clamped along on three edges and transducer

positions on the fourth edge;

Figures 20A, B are output power/frequency graphs and related power smoothness bar chart for the low stiffness panel member clamped on two parallel edges sides and transducer positions on another edge;

Figures 21A, B are output power/frequency graphs and related power smoothness bar chart for the low stiffness panel member with localised clamping at corners/mid-edges and transducer positions on other longer edge;

Figure 22 is a power smoothness bar chart for the low stiffness panel member with further localised clamping between other corner/mid-point clamping;

Figures 23A, B are bar charts for power assessment without normalisation for the low stiffness panel member with three edge clamping of seven-point and full edge nature, respectively, and for position of another local clamp along the other edge at which transducer means has an unfavourable position;

Figures 24A, B are power output/frequency graphs and related power smoothness bar chart for the three-edge clamped case assessed with normalisation;

Figures 25A, B are power output/frequency graphs and related power smoothness bar charts for a panel member of intermediate stiffness and single transducer positions along the longer edge with normalisation;

Figures 26A, B are output power/frequency graphs and power assessment bar chart for the intermediate stiffness panel member with seven point localised clamping assessed

without normalisation;

Figures 27A, B are similar but with normalising for power smoothness assessment;

Figures 28A, B are power output graph and power smoothness bar chart for the intermediate stiffness panel member and a second transducer position along shorter edge;

Figure 29 indicates seven- and thirteen- point localised clamping as applied above;

Figure 30 is a schematic diagram useful in explaining impact of in-transducer compliance, and

Figures 31A-E are power efficiency bar charts for the lower stiffness panel member for different edge conditions.

DESCRIPTION OF ILLUSTRATED EMBODIMENTS

In Figure 1, distributed mode acoustic panel loud-speaker 10 is as described in WO97/09842 with panel member 11 having typical optimal near- (but off-) centre location for drive means transducer 12. The sandwich structure shown with core 14 and skins 15, 16 is exemplary only, there being many monolithic and/or reinforced and other structural possibilities. In any event, normal in-board transducer placement potentially limits clear area available, e.g. for such as transmission of light in the case of a transparent or translucent panel.

Mainly transparent or translucent resonant mode acoustic panel members might use known transparent piezo-electric transducers, e.g. of lanthanum doped titanium

zirconate. However these are relatively costly, hence the alternative approach thereof by which it is possible to leave the resonant mode acoustic panel member 10 mainly clear and unobstructed by optimising loudspeaker design from a choice of four types of excitation shown in Figure 2 directed to the margins or perimeter of the panel, and labelled as types T1 - T4, as follows:-

T1 - launching compression waves into an edge (shown along 18A) of the panel member 11 - as available by inertial action or reference plane related drive transducers

T2 - launching transverse bending waves along an edge (also shown along 18A) of the panel member 11 - as available by laterally deflecting the panel edge using bender action drive transducers

T3 - applying torsion to the panel member 11 as shown across a corner between edges 18A, B - available by action of either of bender or inertial type drive transducers

T4 - producing linear deflection directly at an edge of the panel member 11 as shown at edge 18B - available at local region of contact by inertial action drive transducers.

Figure 3 is a scrap view of composite panel 11 showing high tensile skins 15, 16 and structural core 14 with drive transducers/exciters 31 - 34 for the above-mentioned four types T1 - T4 of edge/marginal drive. In practice, fewer than four drive types might be used at the

same time on a panel which can usefully be acoustically and mechanically optimised for the desired bandwidth of operation and for the particular type of drive employed. Thus, an optimised panel may be driven by any one or more of the different drive types.

A transparent or translucent edge-driven acoustic panel could be monolithic, e.g. of glass, or of skinned core structure using suitable translucent/transparent core and skin materials, see Figure 11. Interpretation with a a visual display unit (VDU) may enable the screen also to be used as a loudspeaker, can have suitably high bending stiffness along with low mass if comprising a pair of skins 15A, 16A sandwiching a lightweight core of aerogel material 14A using transparent adhesive 15B, 16B. Aerogel materials are extremely light porous solid materials, say of silica. Transparent or translucent skin or skins may be of laminated structure and/or made from transparent plastics material such a polyester, or from glass. Conventional transparent VDU screens may be replaced by such a transparent acoustic radiator panel, including with acoustic excitation outside unobstructed main screen area. A particular suitable silica aerogel core material is (RTM) BASOGEL from BASF. Other feasible core materials could include less familiar aerogel-forming materials including metal oxides such as iron and tin oxide, organic polymers, natural gels, and carbon aerogels. A particular suitable plastics skin laminates may be of polyethylene terephthalate (RTM) MYLAR, or other transparent materials

with the correct thickness, modulus and density. Very high shear modulus of aerogels allow extremely thin composites to be made to suit miniaturisation and other physically important factors and working under distributed mode acoustic principles.

If desired, such transparent panel could be added to an existing VDU panel, say incorporated as an integral front plate. For a plasma type display the interior is held at low gas pressure, close to vacuum, and is of very low acoustic impedance. Consequently there will be negligible acoustic interaction behind the sound radiator, resulting in improved performance, and the saving of the usual front plate. For film type display technologies, again the front transparent window may be built using a distributed mode radiator while the display structures behind may be dimensioned and specified to include acoustic properties which aid the radiation of sound from the front panel. For example partial acoustic transparency for the rear display structures will reduce back wave reflection and improve performance for the distributed mode speaker element. In the case of the light emitting class of display, these may be deposited on the rear surface of the transparent distributed mode panel, without significant impediment to its acoustic properties, the images being viewed from the front side.

A transparent distributed mode loudspeaker may also have application for rear projection systems where it may be additional to a translucent screen or this function may

itself be incorporated with a suitably prepared surface for rear projection. In this case the projection surface and the screen may be one component both for convenience and economy but also for optimising acoustic performance. The rear skin may be selected to take a projected image, or alternatively, the optical properties of the core may be chosen for projection use. For example in the case of a loudspeaker panel having a relatively thin core, full optical transparency may not be required or be ideal, allowing the choice of alternative light transmitting cores, e.g. other grades of aerogel or more economical substitutes. Special optical properties may be combined with the core and/or the skin surface to generate directional and brightness enhancing properties for the transmitted optical images.

Where the transparent distributed mode speaker has an exposed front face it may be enhanced, for example, by the provision of conductive pads or regions, visible, or transparent, for user input of data or commands to the screen. The transparent panel may also be enhanced by optical coatings to reduce reflections and/or improve scratch resistance, or simply by anti scratch coatings. The core and skin for the transparent panel may be selected to have an optical tint, for colour shading or in a neutral hue to improve the visual contrast ratios for the display used with or incorporated in the distributed mode transparent panel speaker. During manufacture of the transparent distributed model panel, invisible wiring,

e.g. in the form of micro-wires, or transparent conductive films, may be incorporated together with indicators, e.g. light emitting diodes (LED) or liquid crystal displays (LCD) or similar, allowing their integration into the transparent panel and consequent protection, the technique also minimising impairment to the acoustic performance. Designs may also be produced where total transparency is not required, e.g. where one skin only of the panel has transparency to provide a view to an integral display under that surface.

The transducers may be piezo-electric or electro-dynamic according to design criteria including price and performance considerations, and are represented in Figure 3 as simple outline elements simply bonded to the panel by suitable adhesive(s). For above T1 type drive excitation, inertial transducer 31 is shown driving vertically directed compression waves into the panel 30. For above T2 type of drive excitation, bending type of transducer 32 is shown operative for directly bending regionally to launch bending waves through the loudspeaker panel 30. For above T3 type of drive excitation, inertial transducer 33 is shown serving to deflect the panel corner in driving into the diagonal and thence into the whole loudspeaker panel 30. For above type T4 drive excitation another inertial transducer 34 is shown of block or semi-circular form serving to deflect an edge of the loudspeaker panel 30.

Each type of excitation will engender its own

characteristic drive to the panel 30 which is accounted for in the overall loudspeaker design including parameters of the panel 30 itself. The placement of the transducers 31 - 34 along the panel edge is in practice iterated with the panel design parameters for optimum or at least operationally acceptable modal distribution of bending waves. It is envisaged that, according to the panel characteristics, including such as controlled loss for example, and the location(s) and type(s) of marginal edge or near-edge drive, more than one audio channel may be applied to the panel 30 concerned, e.g. via plural drive transducers. This multi-channel potential may be augmented by signal processing to optimise the sound quality, and/or to control the sound radiation properties and/or even to modify the perceived channel-to-channel separation and spatial effects.

Particularly satisfactory drive transducer locations along edges of a substantially rectangular panel member are at edge positions reached by orthogonal side-parallel lines or co-ordinates through an in-board optimal or preferential drive transducer position according to our above PCT application, see dashed at 42 to 45 - 48 in Figure 4. It is actually practical to use drive transducers at at least two such co-ordinate related edge locations 45 - 48. Figure 6 shows in-phase serial and serial/parallel connections for two and four drive transducers at A and B. Other driver connections are feasible, and may often be preferred, including directly

one-to-one to each transducer means; and any desirable signal conditioning may be applied, e.g. differential delay(s), filtering etc, say to suit reduction of undesirable interaction between transducers and/or with electrical signal source and favoured drive transducer positions CP1 - CP4 in Figure 5 relative to in-board preferential location PL. Pairing can be one from each co-ordinate, i.e. CP1 and CP2, CP2 and CP3, CP3 and CP4, CP4 and CP1, and a first favoured pairing is the one notionally defining included area that is greatest, indeed, contains the geometrical centre X. Such notional area will, of course, further pass through or contain other usual optimal or preferential in-board drive transducer position, see complementary location CL and indication at CP5 and CP6 for the first favoured pairing of drive transducer locations.

It has been interesting to note for a very high Q panel that preferred and most preferred pairs of orthogonal co-ordinate related drive locations can produce low frequency output that may be more extended and uniform even than prior preferential in-board much nearer centre positions, albeit with some moderate variation in the higher frequency range. Off-axis response is similar at higher frequencies but actually somewhat more symmetrical at lower frequencies.

Figure 7 shows select results of an experiment where pairs of transducers for which orthogonal angular relative relation is maintained centred on above normal inboard

preferential transducer location, specifically most beneficial for co-ordinate related marginal drive locations SP1 and SP4, but the transducers are tested at positions relatively translated round the panel edge. Most viable/promising pairs of locations are indicated at pairs of positions 1a, 1b to 6a, 6d. Figure 7 actually also shows results of another experiment where pairs of transducers were at opposite ends of straight lines through the preferential in-board drive location SP1, 2. Fewer viable/promising locations were found at positions 2a, 2d and 3a, 3d. More experimental work may well be worthwhile relative to other pairs or more of edge-drive positions, and theoretical/systematising work is being attempted. It will be appreciated from dimensions quoted and as measured at pairs of positions giving viable/promising measured/assessed results that Figure 7 is not strictly to scale.

Figure 8 shows a panel 70 of core 74 and skins 75, 76 structure, and having near-corner-mounted transducer 72 with mass loading 78 substantially at an otherwise normal in-board preferential transducer, actually the one or in the group furthest away from the corner of excitation by the transducer 72, which is found to be particularly effective in appearing to behave as a "virtual" source of bending wave vibrations. It can be advantageous for the transducer to avoid or at least couple outside a position with a co-ordinate location substantially centred at 5% of side dimensions from the corner as such, where it has been

established that many resonant mode(s) have nodes, i.e. low vibrational activity.

Turning to Figure 9, outline is indicated for an investigation involving select single positions for one edge or edge-adjacent transducer mounting, see at ST1 - ST4 for in-corner, half-side length, quarter-side length and three-eighths side-length, respectively; and select positions for edge-clamping/mass-loading at edge positions about the panel. An exciting transducer was used, see 92 in Figure 9A relative to panel 90, along with loads/clamps by way of panel flanking/gripping 93A/B magnets.

Performance using the corner exciting transducer position ST1 was aided by mass-loading as in Figure 9A at positions Pos. 13, 14, 18, 19 - including in further combination with other positions. For exciting transducer position ST2, good single mass-loading positions are Pos. 6, 7, 8 perhaps 9, 11 particularly, 12, 15 - again including combinations with other positions. Combinations 5 = 11 and 6 + 11 were of particular value, including in further combinations. For exciting transducer position ST3, good single mass-loading positions are Pos. 5, 6, 7, 13, especially the combinations 5 + 13 and 10 + 13, the combination 6 + 18, and combinations/further combinations. For exciting transducer position ST4, best positions appear to be 6, 18 but neither was as good as those for the other exciter positions ST1 - ST3.

Figure 10 shows a panel-form loudspeaker 80 having an in-board unobstructed region 81 extending throughout and

beyond normal in-board preferential drive transducer locations, and a marginally located transducer 82. The region 81 may serve for display purposes directly, or represent something carried by the panel 80 without affecting acoustic performance, or something behind which the loudspeaker panel 80 passes, say in close spacing and/or transparent or translucent. Both of loudness and quality are readily enhanced, the former by additional drive transducers judiciously placed (not shown), and quality by localised edge clamping(s) 83 beneficially to control particular modal vibration points effectively as panel termination(s). The panel 80 is further indicated with localised resilient suspensions 84 located neutrally or even beneficially regarding achieved acoustic performance. High pass filtering 85 is preferred for input signals to drive transducer(s) 82, conveniently to limit to range of best reproduction, say not below 100Hz for A4-size or similar panels. Then, there should not be any problematic low-frequency panel/exciter vibration.

It is advantageous in terms for acoustic performance to control acoustic impedance loading on the panel 80, say to be relatively low in the marginal or peripheral region, especially in the vicinity of the drive transducer(s) 82 where surface velocity tends to be high. Beneficial such control provision includes significant clearance to local planar members (say about 1 - 3 centimetre) and/or slots or other apertures in adjacent peripheral framing or support provision or grille elements.

It is further feasible and advantageous deliberately to arrange for such as mechanical damping to result in acoustic modification including loss in the area 81, or even also marginally thereof, not to be obstructed, at least for higher frequencies. This may be done by choice of materials, e.g. monolithic polycarbonate or acrylic and/or suitable surface coating or laminated construction. Resulting effective concentration of acoustic radiation to marginal regions about plural drive transducers particularly facilitates reproduction of more than one sound channel, at least for near-field listening as for playing computer games or like localised virtual sound stage applications. Further away, merging even of multiple as-energised sound sources need not be problematic when summed, at least for such as audio visual presentations.

The following Table gives relevant physical parameters of actual panel members used for investigation to which Figures 11-28 relate.

| | Lower Stiffness Panel | Higher Stiffness Panel | Intermediate Stiffness panel |
|---|---|---|---|
| Core material | Rohacell | Al honeycomb | Rohacell |
| Core thickness | 1.5mm | 4mm | 1.8mm |
| Skin material | Melinex | Black glass | Black glass |
| Skin thickness | 50 μm | 102 μm | 102 μm |
| Panel Area | 0.06m2 | 0.06m2 | 0.06m2 |
| Aspect ratio | 1:1.13 | 1:1.13 | 1:1.13 |
| Bending stiffness | 0.32 Nm | 12.26 Nm | 2.47 Nm |
| Mass density | 0.35 kgm-2 | 0.76 kgm-2 | 0.6 kgm-2 |
| Zm | 2.7 Nsm-1 | 24.4 Nsm-1 | 9.73 Nsm-1 |

Figures 11-14 relate to the higher stiffness panel member of the first column, Figures 15-24 to the much lower stiffness panel member of the second column, and Figures 25-28 to the intermediate stiffness panel member of the third column.

All of the graphs have acoustic output power (dB/W) as ordinate and frequency as abscissa, thus show measured acoustic output power as a formation of frequency, typically as a truly plotted dotted line. Most of the graphs also show an upper adjustment of the true power line. As mentioned in the preamble, this adjustment is by way of applying functions that normalise to a flat straight line, and allows assessment of resonant modality free of often encountered effects of fall-off of power at

lower frequencies. It is found that smoothness of power makes significant contribution to quality of sound. From such normalised value of the actual power output, it is advantageous to produce assessment of smoothness by inverse of mean square deviation, and most of the bar plots are of that type.

The higher stiffness panel member for Figures 11-14 is actually somewhat less stiff than that used for previous Figures 7 and 9, but does clearly show preference for single transducers to be located at positions corresponding to co-ordinates of in-board transducer locations previously established as optimal, i.e. at about 3/7, 4/9 length from any corner or about 0.42-0.44. However, there are substantial spreads of promising potential location between and beyond such positions for each edge, actually within about 10% and 15% in the mid-regions of shorter and longer edges, respectively, and further within 28% and 30% at quarter-length positions.

At least for the most part, trial positions for transducer edge or near edge location are based on spacing substantially corresponding to the difference between the preferential co-ordinate value of 0.42 for in-board transducer location and the mid-point (0.5) of the edge, albeit with alternate spacings increased to 0.09. Usual trial locations are thus 0.08, 0.17, 0.28, 0.33, 0.42, 0.50.

In the main, it is believed that the illustrated graph and bar charts are substantially self-explanatory as

to showing best and presumably promising locations for transducers, and for localised clamping as feasible for improving less promising transducer locations, see Figures 23.

As far as single transducer edge or near-edge location is concerned, the other two tested panel members of much lower and intermediate stiffnesses also show the same in-board co-ordinate preference on a smoothness of power basis, see Figures 15 and 25. However, the lower stiffness panel member shows another band of nearly as promising locations ranging from about quarter to below tenth length from corners. Interestingly, if assessment is based on efficiency, i.e. amount of power output - as would be the case for a median line through the true output power plot being the basis used for mean square deviation - the above band becomes skewed to emphasise the quarter length position and is mostly preferential to the in-board coordinate related position, see inverse mean square deviation bar chart of Figure 31A. The intermediate stiffness panel member veers towards the characteristic of the higher stiffness panel member in showing a promising spread between the in-board preferential coordinate positions, but also shows promise at about the one-tenth length positions.

It will be appreciated from inspection of true output power plots by those skilled in the art that there are differences between indicated best and viable transducer edge locations in terms of impact on expected quality of

sound reproduction - for which modality is normally taken as a significant factor, i.e. number and evenness of excitation of resonant modes. If characteristics such as modality are seen as more promising for locations indicated as preferential on the basis of assessing smoothness of output power, it is, of course, feasible to process input signals towards what is shown after above normalising - specifically selectively to amplify low frequency in a form of signal conditioning or equalising. This would achieve, indeed exceed, power available using locations optimised on efficiency basis; but obviously not the efficiency itself as more input power has to be used.

Accordingly, other ways of increasing lower frequency power were investigated as foreshadowed above, namely baffling and/or selectively spaced local clamping or full edge clamping. Figures 18A, B, C give indication of generally beneficial raising of lower frequency output for surrounding baffling with an area over 60% greater than the low stiffness panel, rigid clamping of all three edges not affording transducer location, and both of such baffling and clamping. Such baffling tends to maintain modality but may not always be feasible in specific applications. Accordingly, full investigation of clamping seemed worthwhile for alternative transducer edge locations for the lower stiffness panel member. Results showed that assessment on an efficiency basis tended to emphasise the quarter length point for both of full edge

clamping at true parallel edges or three edges, and 7-point local edge clamping at corners and mid-points as at 'X' in Figure 29, with the edge of transducer location unclamped along its length, see bar charts of Figures 31B, C and D, respectively. However, 13-point clamping as at 'X' + 'O' in Figure 29 shifted emphasis strongly to the in-board preferential coordinate position. Assessment of panel members with clamping on the basis of power smoothness produces much the same results for indication of best transducer locations, see bar charts of Figures 19A, 20B, 21B and 22, but with considerable differences as to next favoured positions, as is generally confirmed by inspection of true output power plots.

Indeed, particularly strong general correlation is found between preferences based on skilled inspection and assessment according to smoothness of power output. In turn, this tends to confirm at least slight preference for such assessment unless there are practical factors that lead to preference for efficiency rather than quality - though that may not be much different anyway.

Another application for localised edge clamping is in relation to improving an unpromising transducer edge location, see bar charts Figures 23A, B showing right hand rather than left hand sides of the edge concerned as otherwise in the drawings. The cases concerned relate to the lower stiffness panel member, and are full clamping of three edges and seven point clamping, with a localised clamp varied along the same edge as the transducer means.

In both cases, useful improvement results at about the quarter length position from the corner more remote from the exciter - see reference bar at right hand side of Figure 23B for no clamping condition. The spread is greater for the full edge clamping case, see Figure 23A.

Where there is disagreement between assessments based on power efficiency and power smoothness, it is worth bearing in mind that any panel member with clamping of corners to the edge with which the transducer is associates effectively has forced nulls at the corner. There thus must be up to half wavelengths distance for resonant modes concerned before vibrational activity can reach anti-nodal peaks. If preference for a close-to-corner transducer location is indicated by power smoothness assessment, it should be treated with caution as it could be of low power/efficiency, even though smooth by reason of coupling to all resonant mode waveform concerned at may be quite small rises in their waveforms. Checking with the corresponding power/efficiency assessment is thus recommended. Indeed, best is always likely to be where there is substantial agreement between the two bases of assessment, or some compromise particularly suited to a specific application; and preferably further taking account of skilled inspection of power/frequency graphs perhaps advantageously with as well as without any normalisation for assessment purposes.

For the investigated panel members with higher and intermediate stiffnesses, there is a considerable measure

of consistency as to best transducer edge locations, but with quite marked difference as to other promising locations. The much lower stiffness panel member is markedly less critical as to promising transducer edge locations.

This position is yet more apparent when considering use of more than one transducer means associated with edges of the same panel member. The position for increased coupling to the resonant modes of a panel member is accompanied by complexity of their inevitable combined interaction with the natural distributed resonant vibration pattern of the panel member, and compounded by such distributed vibration pattern being available only at panel edges. There are notable variations from simple rules such as based on coordinates of established preferential in-board transducer location. However, the assessment procedures hereof afford valuable tools for finding good combinations of edge-associated transducer locations.

For the higher stiffness panel of the above Table, Figures 13A, 14A one transducer means is located at a position within the tolerance range of about 0.38-0.45 for the 0.42 preferred position for single transducer means along the longer edge. Second transducer means is varied along the closest shorter edge and Figure 14A shows marginal preference for the furthest 0.42 preferred position, i.e. centred at 0.58, compared with several other positions at about quarter, third and two-thirds

lengths from the common corner. Interestingly, fixing the second transducer means at such about 0.58 preferred position along the shorter panel edge, and varying the other transducer along the longer pane edge (see Figures 13B, 14B), produced best and next best preferences at about the one-fifth (0.17) and quarter length positions along the longer panel edge, both showing better than the start position (about 0.42) for power smoothness. This is a procedure clearly capable of further application in an iterative manner, though it is recommended that either or both of power/efficiency assessment and skilled inspection be deployed, particularly if there is no convergence of location in the procedure or any indicated good position is less good in practice than hoped (or was before in the procedure).

Figures 16A, B show results of investigation of the much lower stiffness panel member with the preferred about 0.42 transducer location used for the longer edge and a second transducer varied along the nearest shorter edge. There were no great differences in power smoothness increase, the best three approaching corners and the nearest 0.42 preferential position, with some otherwise general preference for associations being in some quadrant.

The same investigation for the intermediate stiffness panel member showed strong preference for the adjacent quadrant preferential 0.42 transducer location (actually 0.58), see Figures 28A, B.

Reverting to the case of the much less stiff panel member, two effects are seen as contributing to much less well-defined best/near best exciter position. One is that the panel modes for the range of frequencies of the optimisation are higher than for stiffer panel members. The panel member is therefore a closer approximation to a continuum, and smoothness of output power is less dependent on transducer position, particularly second transducer positions.

The other effect concerns the much lower mechanical impedance of the panel member, which leads to a less strong dependence on transducer position for energy transfer. The mechanism involved is now explained.

The mechanical impedance (Zm) of a panel member determines the movement resulting for an applied point force, see 100, 101 in Figure 30. An object associated with the panel with a mechanical impedance put very much less than, even approaching comparable to, the panel impedance will strongly offset panel motion where the object is located. Associating an exciting transducer of moving coil type with the panel is equivalent to connecting the panel to a grounded mass (the magnet cup of the transducer, see 102) via a spring (the voice coil suspension of the transducer, see 108). When the impedance of such spring is too close to the panel impedance, it will in some part determine the panel motion at the transducer. In the limit of this spring wholly determining the point motion at the transducer, there

would be no dependence of input power on exciter position. In practice the ratio of spring impedance to panel impedance can so profoundly affect best transducer location, and results are no longer so clear for best/near best transducer locations.

This low mechanical impedance has more effect for edge transducer location than for in-board transducer location as mechanical impedance is yet lower at the panel edge, which means that a transducer, voice coil suspension has a larger effect. Specifically, for the lower stiffness panel of the above Table:

mechanical impedance in the body of the panel is

Zmbody=2.7 Nsm-1

mechanical impedance at the panel edge is approximately half Zmbody, i.e.

Zmedge=1.3 Nsm-1

Compliance of the voice coil suspension of the transducer used is:

Cms=0.52x10-3 mN-1

The mechanical impedance at each of modal frequencies can be an order of magnitude lower than the average impedance, Zmedge. It is therefore feasible to estimate a typical frequency, below which the exciter has a strong effect on the panel member, say where impedance of the voice coil suspension is about one-fifth of the average impedance at the panel edge. Then,

1 1

$$\frac{}{\omega \times Cms} = \frac{}{5} \times Zmedge$$

and gives an estimate of 1200 Hz, below which the transducer and panel are intendedly coupled, which is within the frequency range of optimisation.

Considering the transducer and such low mechanical impedance, panel member as one coupled system the transducer in part determines the impedance of the panel member, and smoothness of the output power is less dependent on the position of the transducer.

Repeating such analysis for the high stiffness panel gives a corresponding frequency of 130Hz, which is outside the frequency range of the optimisation.

CLAIMS

1. Active acoustic device comprising a panel member having distribution of resonant modes of bending wave action determining acoustic performance in conjunction with transducer means coupled to the panel member, wherein the transducer means is located at a marginal position of the panel member, the arrangement being such as to result in acoustically acceptable action dependent on said distribution of active said resonant modes.

2. Active acoustic device according to claim 1, wherein said marginal position has been selected for best or better operative interaction of said transducer means as located thereat with said panel member as to numbers and frequencies of said resonant modes involved in operation of said transducer means in conjunction with said panel member.

3. Active acoustic device according to claim 1 or claim 2, wherein said marginal position has been selected for best or better operative interaction of said transducer means as located thereat with said panel member as to power of acoustic output as an acoustic radiator or loudspeaker.

4. Active acoustic device according to claim 1, 2 or 3, wherein said marginal position has been selected for best or better operative interaction of said transducer means as located thereat with said panel member as to smoothness of acoustic output power as an acoustic radiator or loudspeaker.

5. Active acoustic device according to any preceding claim, wherein said panel member has edge clamping means.

6. Active acoustic device according to claim 5, wherein said edge clamping means is localised.

7. Active acoustic device according to claim 6 with claim 1, wherein said arrangement includes said localised edge clamping means being located to improve acoustic operation of the device in conjunction with said transducer means located at a said marginal position not itself selected for best operative interaction with said panel member.

8. Active acoustic device according to claim 6, having plural said localised edge clamping means.

9. Active acoustic device according to claim 7, wherein mutual spacing of said plural localised edge clamping means is related to wavelengths of lower frequency resonant modes so as to raise their contribution to acoustic action of the device.

10. Active acoustic device according to claim 7, 8 or 9 wherein said panel member is of plural-sided form with said localised edge clamping means associated with more than one side.

11. Active acoustic device according to claim 10 with claim 8, wherein said panel member is substantially rectangular with said plural localised edge clamping means associated with three sides not associated with said transducer means.

12. Active acoustic device according to claim 11, wherein

said plural localised edge clamping means are at each corner and at mid-points of said three sides.

13. Active acoustic device according to claim 5, wherein said edge clamping means extends along said panel member.

14. Active acoustic device according to claim 13, wherein said panel member is of plural sided form and said edge clamping means extends along at least one side not associated with said transducer means.

15. Active acoustic device according to claim 14, wherein said panel member is substantially rectangular and said edge clamping means extends along two parallel sides.

16. Active acoustic device according to claim 14, wherein said edge-clamping means extends along three sides.

17. Active acoustic device according to any preceding claim, wherein said panel member has at least two said transducer means in edge association therewith.

18. Active acoustic device according to claim 17, wherein said panel member is of plural sided form with said transducer means associated with at least two side edges.

19. Active acoustic device according to claim 17 or claim 18, wherein said panel member is substantially rectangular with said transducer means associated with longer and shorter sides.

20. Active acoustic device according to any preceding claim, wherein at least one said marginal position has correlation with in-board transducer location known to be viable.

21. Active acoustic device according to any preceding

claim, further comprising baffle means extending about and beyond said panel member.

22. Active acoustic device according to any preceding claim, wherein said panel member is at least partially transparent or translucent.

23. Active acoustic device according to any preceding claim, wherein said transducer means is of electro-mechanical type.

24. Active acoustic device according to any preceding claim, wherein said transducer means is operative to launch compression waves into edge of said panel member and/or to deflect edge of said panel member laterally to launch transverse bending waves along said panel member and/or to apply torsion across a corner of said panel member and/or to produce linear deflection of a local edge region of said panel member.

25. Method of making an active acoustic device to include a panel member having distribution of resonant modes of bending wave action beneficial to acceptable acoustic performance in conjunction with transducer means suitably coupled to the panel member, the method comprising assessing acoustic performance resulting from locating the transducer means at a number of different marginal positions of the panel member, and selecting a said marginal position for acceptable acoustic performance.

26. Method for making an acoustic device to include a panel member having distribution of resonant modes of bending wave action beneficial to acceptable acoustic

performance in conjunction with transducer means suitably coupled to the panel member, the method comprising adding localised clamping means to improve said acoustic performance resulting from some particular marginally located said transducer means, the method further comprising assessing acoustic performance resulting from locating said localised clamping means at a number of different marginal positions of the panel member, and selecting a said marginal position for acceptable acoustic performance.

27. Method according to claim 25 or claim 26, wherein said assessing of said acoustic output is limited to a frequency range germane to intended use and acceptable performance of said active acoustic device.

28. Method according to claim 1, 25, 26 or 27, wherein said assessing is of the active acoustic device operative as a sound radiator or loudspeaker and in relation to its acoustic output using said different marginal positions.

29. Method according to claim 28, wherein said assessing of said acoustic output is or includes in relation to its content corresponding to said resonant modes as to number of such resonant modes and/or their frequencies or distribution and/or evenness of their contributions to said acoustic output.

30. Method according to claim 28, or claim 29,, wherein said assessing of said acoustic output is or includes in relation to amount of power in said acoustic output thus efficiency in conversion of input mechanical vibration

(thus customary causative electrical drive) into said acoustic output.

31. Method according to claim 28,29 or 30, wherein said assessing of said acoustic output is or includes in relation to smoothness of power of said acoustic output thus evenness of contributions from said resonant modes.

32. Method according to claim 30 or claim 31, wherein said assessing includes relating said acoustic output to some reference and producing an assessment measure according to deviation from said reference.

33. Method according to claim 32 with claim 30, wherein said reference is a single substantially median value over a particular frequency range of said acoustic output.

34. Method according to claim 32 with claim 31, wherein said reference comprises a succession or continuum of substantially median values throughout said acoustic output over a particular frequency range of said acoustic output.

35. Method according to claim 34, wherein said assessing includes adjusting measured said acoustic output selectively to levels consonant with said reference having meaningful a single value.

36. Method according to claim 35, wherein said single median value corresponds with what applies at higher frequencies where said resonant modes are relatively dense.

37. Method according to claim 35 or claim 36, wherein said adjusting involves raising levels of lower

frequencies where said resonant modes are less dense.

38. Method according to any one of claims 32 to 37, wherein said assessment measure involves mean square deviation from said reference.

39. Method according to claim 38, wherein said assessment measure comprises inverse mean square deviation from said reference.

40. Method according to any preceding method claim, wherein application of a method according to any one of claims 5, 6 and 7 is followed or accompanied by application of at least one other method of claims 5 to 7 to the same said acoustic outputs from the same said number of different positions.

41. Method according to any preceding method claim, as applied to a said panel member with three or more sides or edges, wherein each of stages of said assessing is applied to said number of different positions spaced along the one and the same edge of said panel member.

42. Method according to claim 41 with claim 25, wherein a said assessing stage is applied with a first transducer means already at one marginal location of said panel member, the assessing stage serving to locate any other marginal position for a second transducer means to be satisfactorily operative together with the first transducer means.

43. Method according to claim 42, wherein said one marginal location of said first transducer means is as indicated best or viable by an earlier stage of said

assessing.

44. Method according to claim 43, wherein said first and second transducer means are marginally located relative to different edges of said panel member.

45. Method according to claim 44, wherein said different edges are longer and shorter edges of a substantially rectangular panel.

46. Method according to claim 45, wherein said first transducer means is marginally located relative to said longer edge.

47. Method according to claim 46, wherein longer and shorter edges of a substantially rectangular panel member are subject to said assessing individually in separate said assessing stages.

48. Method according to any preceding method claim, wherein spacings of said different positions along said one edge are related to difference between the mid-point of said one edge and a point orthogonally related to a known successful transducer location in-board of said panel member.

ABSTRACT

TITLE: ACTIVE ACOUSTIC DEVICES

Active acoustic device comprises a panel member (11) having distribution of resonant modes of bending wave action determining acoustic performance in conjunction with transducer means (31-34). The transducer means (31-34) is coupled to the panel member (11) at a marginal position. The arrangement is such as to result in acoustically acceptable action dependent on said distribution of active said resonant modes. Methods of selecting the transducer location, or improvement by location of localised marginal clamping, rely on assessing best or better operative interaction of said transducer means (31-34) and the panel members (11) according to parameters of acoustic output for the device as an acoustic radiator.

(Fig. 3)

**REF: P.5952 WOP**

**ANNEX B**

**PCT/GB99/01048**

TITLE: ACOUSTIC DEVICE

## DESCRIPTION

### TECHNICAL FIELD

The invention relates to acoustic devices and more particularly, but not exclusively, to loudspeakers incorporating resonant multi-mode panel acoustic radiators, e.g. of the kind described in our International application WO97/09842. Loudspeakers as described in WO97/09842 have become known as distributed mode (DM) loudspeakers.

Distributed mode loudspeakers (DML) are generally associated with thin, light and flat panels that radiate acoustic energy equally from both sides and in a complex diffuse fashion. While this is a useful attribute of a DML there are various real-world situations in which by virtue of the applications and their boundary requirements a monopolar form of a DML would be preferred.

In such applications the product may with advantage be light, thin and unobtrusive.

## BACKGROUND ART

It is known from International patent application WO97/09842 to mount a multi-mode resonant acoustic radiator in a relatively shallow sealed box whereby acoustic radiation from one face of the radiator is contained. In this connection it should be noted that the term 'shallow' in this context is relative to the typical proportions of a pistonic cone type loudspeaker drive unit in a volume efficient enclosure. A typical volume to pistonic diaphragm area ratio may be 80:1, expressed in ml to $cm^2$. A shallow enclosure for a resonant panel loudspeaker where pistonic drive of a lumped air volume is of little relevance, may have a ratio of 20:1.

## DISCLOSURE OF INVENTION

According to the invention an acoustic device comprises a resonant multi-mode acoustic resonator or radiator panel having opposed faces, means defining a cavity enclosing at least a portion of one panel face and arranged to contain acoustic radiation from the said portion of the panel face, wherein the cavity is such as to modify the modal behaviour of the panel. The cavity may be sealed. A vibration exciter may be arranged to apply bending wave vibration to the resonant panel to produce an acoustic output, so that the device functions as a loudspeaker.

The cavity size may be such as to modify the modal

behaviour of the panel.

The cavity may be shallow. The cavity may be sufficiently shallow that the distance between the internal cavity face adjacent to the said one panel face and the one panel face is sufficiently small as to cause fluid coupling to the panel. The resonant modes in the cavity can comprise cross modes parallel to the panel, i.e. which modulate along the panel, and perpendicular modes at right angles to the panel. Preferably the cavity is sufficiently shallow that the cross modes (X,Y) are more significant in modifying the modal behaviour of the panel than the perpendicular modes (Z). In embodiments, the frequencies of the perpendicular modes can lie outside the frequency range of interest.

The ratio of the cavity volume to panel area ($ml:cm^2$) may be less than 10:1, say in the range about 10:1 to 0.2:1.

The panel may be terminated at its edges by a generally conventional resilient surround. The surround may resemble the roll surround of a conventional pistonic drive unit and may comprise one or more corrugations. The resilient surround may comprise foam rubber strips.

Alternatively the edges of the panel may be clamped in the enclosure, e.g. as described in our co-pending PCT patent application PCT/GB99/00848 dated 30 March 1999.

Such an enclosure may be considered as a shallow tray containing a fluid whose surface may be considered to have wave-like behaviour and whose specific properties depend on both the fluid (air) and the dimensional or volume box

geometry. The panel is placed in coupled contact with this active wave surface and the surface wave excitation of the panel excites the fluid. Conversely the natural wave properties of the fluid interact with the panel, so modifying its behaviour. This is a complex coupled system with new acoustic properties in the field.

Subtle variations in the modal behaviour of the panel may be achieved by providing baffling, e.g. a simple baffle, in the enclosure and/or by providing frequency selective absorption in the enclosure.

From another aspect the invention is a method of modifying the modal behaviour of a resonant panel loudspeaker or resonator, comprising bringing the resonant panel into close proximity with a boundary surface to define a resonant cavity therebetween.

## BRIEF DESCRIPTION OF DRAWINGS

Figure 1 is a cross section of a first embodiment of sealed box resonant panel loudspeaker;

Figure 2 is a cross-sectional detail, to an enlarges scale, of the embodiment of Figure 1;

Figure 3 is a cross section of a second embodiment of sealed box resonant panel loudspeaker;

Figure 4 shows the polar response of a DML free-radiating on both sides;

Figure 5 shows a comparison between the sound pressure level in Free Space (solid line) and with the DML arranged 35mm from the wall (dotted line);

Figure 6 shows a comparison between the acoustic power of a DML in free space (dotted line) and with a baffle around the panel between the front and rear;

Figure 7 shows a loudspeaker according to the invention;

Figure 8 shows a DML panel system;

Figure 9 illustrates the coupling of components;

Figure 10 illustrates a single plate eigen-function;

Figure 11 shows the magnitudes of the frequency response of the first ten in-vacuum panel modes;

Figure 12 shows the magnitudes of the frequency response of the same modes in a loudspeaker according to the embodiment of the invention;

Figure 13 shows the effect of the enclosure on the panel velocity spectrum;

Figure 14 illustrates two mode shapes;

Figure 15 shows the frequency response of the reactance;

Figure 16 illustrates panel velocity measurement;

Figure 17 illustrates the microphone set up for the measurements;

Figure 18 shows the mechanical impedance for various panels;

Figure 19 shows the power response of various panels;

Figure 20 shows the polar response of various panels;

Figure 21 shows a microphone set up for measuring the internal pressure in the enclosure;

Figure 22 shows the internal pressure contour;

Figure 23 shows the internal pressure measured using the array of Figure 21;

Figure 24 shows the velocity and displacement of various panels;

Figure 25 shows the velocity spectrum of an A5 panel

in free space and enclosed;

Figure 26 shows the velocity spectrum of another A5 panel in free space and enclosed;

Figure 27 shows the power response of an A2 panel in an enclosure of two depths, and

Figure 28 illustrates equalisation using filters.

In the drawings and referring more particularly to Figures 1 and 2, a sealed box loudspeaker 1 comprises a box-like enclosure 2 closed at its front by a resonant panel-form acoustic radiator 5 of the kind described in WO97/09842 to define a cavity 13. The radiator 5 is energised by a vibration exciter 4 and is sealed to the enclosure round its periphery by a resilient suspension 6. The suspension 6 comprises opposed resilient strips 7, e.g. of foam rubber mounted in respective L-section frame members 9,10 which are held together by fasteners 11 to form a frame 8. The interior face 14 of the back wall 3 of the enclosure 2 is formed with stiffening ribs 12 to minimise vibration of the back wall. The enclosure may be a plastics moulding or a casting incorporating the stiffening ribs.

The panel in this embodiment may be of A2 size and the depth of the cavity 13 may be 90mm.

The loudspeaker embodiment of Figure 3 is generally similar to that of Figures 1 and 2, but here the radiator panel 5 is mounted on a single resilient strip suspension 6, e.g. of foam rubber, interposed between the edge of the radiator 5 and the enclosure to seal the cavity. The

radiator panel size may be A5 and the cavity depth around 3 or 4 mm.

It will be appreciated that although the embodiments of Figures 1 to 3 relate to loudspeakers, it would equally be possible to produce an acoustic resonator for modifying the acoustic behaviour of a space, e.g. a meeting room or auditorium, using devices of the general kind of Figures 1 to 3, but which omit the vibration exciter 4.

It is shown that a panel in this form of deployment can provide a very useful bandwidth with quite a small enclosure volume with respect to the diaphragm size, as compared with piston speakers. The mechanisms responsible for the minimal interaction of this boundary with the distributed mode action are examined and it is further shown that in general a simple passive equalisation network may be all that is required to produce a flat power response. It is also demonstrated that in such a manifestation, a DML can produce a near-ideal hemispherical directivity pattern over its working frequency range into a 2Pi space.

A closed form solution is presented which is the result of solving the bending wave equations for the coupled system of the panel and enclosure combination. The system acoustic impedance function is derived and is in turn used to calculate the effect of the coupled enclosure on the eigen-frequencies, and predicting the relevant shifts and additions to the plate modes.

Finally, experimental measurement data of a number

samples of varying lump parameters and sizes are investigated and the measurements compared with the results from the analytical model.

Figure 4 illustrates a typical polar response of a free DML. Note that the reduction of pressure in the plane of the panel is due to the cancellation effect of acoustic radiation at or near the edges. When a free DML is brought near a boundary, in particular parallel with the boundary surface, acoustic interference starts to take place as the distance to the surface is reduced below about 15cm, for a panel of approximately 500 $cm^2$ surface area. The effect varies in its severity and nature with the distance to the boundary as well as the panel size. The result, nonetheless is invariably a reduction of low frequency extension, peaking of response in the lower midrange region, and some aberration in the midrange and lower treble registers as shown in the example of Figure 5. Because of this, and despite the fact that the peak can easily be compensated for, application of a 'free' DML near a boundary becomes rather restrictive.

When a DML is placed in a closed box or so-called "infinite baffle" of sufficiently large volume, radiation due to the rear of the panel is contained and that of the front is generally augmented in its mid and low frequency response, benefiting from two aspects. First is due to the absence of interference effect, caused by the front and rear radiation, at frequencies whose acoustic wavelengths in air are comparable to the free panel dimensions; and

second, from the mid to low frequency boundary reinforcement due to baffling and radiation into 2Pi space, see Figure 6. Here we can see that almost 20 dB augmentation at 100Hz is achieved from a panel of 0.25 $m^2$ surface area.

Whilst this is a definite advantage in maximising bandwidth, it may not be possible to incorporate in practice unless the application would lend itself to such a solution. Suitable applications include ceiling tile loudspeakers and custom in-wall installation.

In various other applications there may be a definite advantage to utilise the benefits of the "infinite baffle" configuration, without having the luxury of a large closed volume of air behind the panel. Such applications may also benefit from an overall thinness and lightness of the loudspeaker. It is an object of the present invention to bring understanding to this form of deployment and offer analytical solutions.

A substantial volume of work supports conventional piston loudspeakers in various modes of operation, especially in predicting their low frequency behaviour when used in an enclosure. It is noteworthy that distributed mode loudspeakers are of very recent development and as such there is virtually no prior knowledge of the issues involved to assist with the derivation of solutions for similar analysis. In what follows, an approach is adopted which provides a useful set of solutions for a DML deployed in various mechanoacoustic interface conditions including

loading with a small enclosure.

The system under analysis is shown schematically in Figure 7. In this example the front side of the panel radiates into free space, whilst the other side is loaded with an enclosure. This coupled system may be treated as a network of velocities and pressures are shown in the block diagram of Figure 8. The components are, from left to right; the electromechanical driving section, the modal system of the panel, and the acoustical systems.

The normal velocity of the bending-wave field across a vibrating panel is responsible for its acoustic radiation. This radiation in turn leads to a reacting force which modifies the panel vibration. In the case of a DML radiating equally from both sides, the radiation impedance, which is the reacting element, is normally insignificant as compared with the mechanical impedance of the panel. However, when the panel radiates into a small enclosure, the effect of acoustic impedance due to its rear radiation is no longer small, and in fact it will modify and add to the scale of the modality of the panel.

This coupling, as shown in Figure 9, is equivalent to a mechanoacoustical closed loop system in which the reacting sound pressure is due to the velocity of the panel itself. This pressure modifies the modal distribution of the bending wave field which in turn has an effect on the sound pressure response and directivity of the panel.

In order to calculate directivity and to inspect forces and flows within the system, it is necessary to

solve for the plate velocity. This far-field sound pressure response can then be obtained with the help of Fourier transformation of this velocity as described in an article by PANZER,J; HARRIS,N; entitled "Distributed Mode Loudspeaker Radiation Simulation" presented at the 105th AES Convention, San Francisco 1998 # 4783. The forces and flows can then be found with the help of network analysis. This problem can be approached by developing the velocities and pressures of the total system in terms of the in-vacuum panel eigen-functions (3,4) as explained in CREMER,L; HECKL,M; UNGAR,E; "Structure-Borne Sound" SPRINGER 1973 and BLEVINS, R.D. "Formulas for Natural frequency and Mode Shape", KRIEGER Publ., Malabar 1984. For example, the velocity at any point on the panel can be calculated from equation (1).

(1)

This series represents a solution to the differential equation describing the plate bending waves, equation (2),when coupled to the electromechanical lumped element network as well as its immediate acoustic boundaries.

(2)

$L_B$ is the bending rigidity differential operator of fourth order in x and y, v is the normal component of the bending wave velocity. $\mu$ is the mass per unit area and $\omega$

is the driving frequency. The panel is disturbed by the mechanical driving pressure, $p_m$, and the acoustic reacting sound pressure field, $p_a$, Figure 7.

Each term of the series in equation (1) is called a modal velocity, or, a "mode" in short. The model decomposition is a generalised Fourier transform whose eigen-functions $\Phi_{pi}$ share the orthogonality property with the sine and cosine functions associated with Fourier transformation. The orthogonality property of $\phi_{pi}$ is a necessary condition to allow appropriate solutions to the differential equation (2). The set of eigen-functions and their parameters are found from the homogenous version of equation (2) i.e. after switching off the driving forces. In this case the panel can only vibrate at its natural frequencies or the so-called eigen-frequencies, $\varpi_i$, in order to satisfy the boundary conditions.

In equation (2), $\phi_{pi(x,y)}$ is the value of the $i^{th}$ plate eigen-function at the position where the velocity is observed. $\phi_{pi\ (xo,yo)}$ is the eigen-function at the position where the driving force $F_{pi\ (j\omega)}$ is applied to the panel. The driving force includes the transfer functions of the electromechanical components associated with the driving actuator at $(x_o,y_o)$, as for example exciters, suspensions, etc. Since the driving force depends on the panel velocity at the driving point, a similar feedback situation as with the mechanoacoustical coupling exists at the drive point(s), albeit the effect is quite small in practice.

Figure 10 gives an example of the velocity magnitude distribution of a single eigen-function across a DML panel. The black lines are the nodal lines where the velocity is zero. With increasing mode index the velocity pattern becomes increasingly more complex. For a medium sized panel approximately 200 modes must be summed in order to cover the audio range.

The modal admittance, $Y_{pi(j\omega)}$, is the weighting function of the modes and determines with which amplitude and in which phase the $i^{th}$ mode takes part in the sum of equation (1). $Y_{pi}$, as described in equation (3), depends on the driving frequency, the plate eigen-value and, most important in the context of this paper, on the acoustic impedance of the enclosure together with the impedance due to the free field radiation.

(3)

$s_p = s/\omega_p$ is the Laplace frequency variable normalised to the fundamental panel frequency, $\omega_p$, which in turn depends on the bending stiffness $K_p$ and mass $M_p$ of the panel, namely $\omega_p^2 = K_p/M_p$. $R_{pi}$ is the modal resistance due to material losses and describes the value of $Y_{pi(j\omega)}$ at resonance when $s_p = \lambda_{pi}$. $\lambda_{pi}$ is a scaling factor and is a function of the $i^{th}$ plate eigen-value $\lambda_{pi}$ and the total radiation impedance $Z_{mai}$ as described in equation (4).

(4)

In the vacuum case ($Z_{mai}=0$) the second term in equation (3) becomes a band-pass transfer function of second order with damping factor $d_{pi}$. Figure 11 shows the magnitudes of the frequency response of the in-vacuum $Y_{pi(j\omega)}$ for the first ten modes of a panel, when clamped at the edges. The panel eigen-frequencies coincide with the peaks of these curves.

If the same panel is now mounted onto an enclosure, the modes will not only be shifted in frequency but also modified, as seen in Figure 12. This happens as a result of the interaction between the two modal systems of the panel and the enclosure, where the modal admittance of the total system is no longer a second order function as in the in-vacuum case. In fact, the denominator of equation (3) could be expanded in a polynomial of high order, which will reflect the resulting extended characteristic function.

The frequency response graphs of Figure 13 shows the effect of the enclosure on the panel velocity spectrum. The two frequency response curves are calculated under identical drive condition, however, the left-hand graph displays the in-vacuum case, whilst the right hand graph shows the velocity when both sides of the panel are loaded with an enclosure. A double enclosure was used in this example in order to exclude the radiation impedance of air. The observation point is at the drive point of the exciter.

Clearly visible is the effect of the panel eigen-frequency shift to higher frequencies in the right diagram, which was also seen in Figure 12. It is noteworthy that as a result of the enclosure influence, and the subsequent increase in the number and density of modes, a more evenly distributed curve describing the velocity spectrum is obtained.

The mechanical radiation impedance is the ratio of the reacting force, due to radiation, and the panel velocity. For a single mode, the radiation impedance can be regarded as constant across the panel area and may be expressed in terms of the acoustical radiated power $P_{ai}$ of a single mode. Thus the modal radiation impedance of the $i^{th}$ mode may be described by equation (5).

(5)

$\langle v_i \rangle$ is the mean velocity across the panel associated with the $i^{th}$ mode. Since this value is squared and therefore always positive and real, the properties of the radiation impedance $Z_{mai}$ are directly related to the properties of the acoustical power, which is in general a complex value. The real part of $P_{ai}$ is equal to the radiated far-field power, which contributes to the resistive part of $Z_{mai}$, causing damping of the velocity field of the panel. The imaginary part of $P_{ai}$ is caused by energy storing mechanisms of the coupled system, yielding to a positive or negative value for the reactance of $Z_{mai}$.

A positive reactance is caused by the presence of an

acoustical mass. This is typical, for example, of radiation into free space. A negative reactance of $Z_{mai}$, on the other hand, is indicative of the presence of a sealed enclosure with its equivalent stiffness. In physical terms, a 'mass' type radiation impedance is caused by a movement of air without compression, whereas a 'spring' type impedance exists when air is compressed without shifting it.

The principal effect of the imaginary part of the radiation impedance is a shift of the in-vacuum eigen-frequencies of the panel. A positive reactance of $Z_{mai}$ (mass) causes a down-shift of the plate eigen-frequencies, whereas a negative reactance (stiffness) shifts the eigen-frequencies up. At a given frequency, the pane-mode itself dictates which effect will be dominating. This phenomenon is clarified by the diagram of Figure 14, which shows that symmetrical mode shapes cause compression of air, 'spring' behaviour, whereas asymmetrical mode shapes shift the air side to side, yielding an acoustical 'mass' behaviour. New modes, which are not present in either system when they are apart, are created by the interaction of the panel and enclosure reactances.

Figure 15 shows the frequency response of the imaginary part of the enclosure radiation impedance. The left-hand graph displays a 'spring-type' reactance, typically produced by a symmetrical panel-mode. Up to the first enclosure eigen-frequency the reactance is mostly negative. In-vacuum eigen-frequencies of the panel, which

are within this frequency region, are shifted up. In contrast the right diagram displays a 'mass-type' reactance behaviour, typically produced by an asymmetrical panel mode.

If the enclosure is sealed and has a rigid wall parallel to the panel surface, as in our case here, then the mechanical radiation impedance for the $i^{th}$-plate mode is (5):

(6)

$\psi_{(i,k,l)}$ is the coupling integral which takes into account the cross-sectional boundary conditions and involves the plate and enclosure eigen-functions. The index, i, in equation (6) is the plate mode-number; $L_{dz}$ is the depth of the enclosure; and $k_z$ is the modal wave-number component in the z-direction (normal to the panel). For a rigid rectangular enclosure $k_z$ is described by equation(7):

(7)

The indices, k and l, are the enclosure cross-mode numbers in x and y direction, where $L_{dx}$ and $L_{dy}$ are enclosure dimensions in this plane. $A_0$ is the area of the panel and $A_d$ is cross-sectional area of the enclosure in the x and y plane.

Equation (6) is a complicated function, which describes the interaction of the panel modes and the enclosure modes in detail. In order to understand the nature of this formula, let us simplify it by constraining the system to the first mode of the panel and to the z-modes of the enclosure only (k=l=0). This will result in the following simplified relationship.

(8)

Equation (8) is the well known driving point impedance of a closed duct (6). If the product $k_z.L_{dz} << 1$ then a further simplification can be made as follows.

(9)

where $C_{ab} = V_b/(\rho_a.c_a^2)$ is the acoustical compliance of the enclosure of volume $V_b$. Equation (9) is the low frequency lumped element model of the enclosure. If the source is a rigid piston of mass $M_{ms}$ with a suspension having a compliance $C_{ms}$ then the fundamental 'mode' has the eigen-value $\lambda_{po} = 1$ and the scaling factor of the coupled system of equation (4) becomes the well known relationship as shown in equation (10),[1].

(10)

with the equivalent mechanical compliance of the enclosure air volume $C_{mb} = C_{ab}/A_0^2$.

Various tests were carried out to investigate the effect of a shallow back enclosure on DM loudspeakers. In addition to bringing general insight into the behaviour of DNM panels in an enclosure, the experiments were designed to help verify the theoretical model and establish the extent to which such models are accurate in predicting the behaviour of the coupled modal system of a DML panel and its enclosure.

Two DML panels of different size and bulk properties were selected as our test objects. It was decided that these would be of sufficiently different size on the one hand, and of a useful difference in their bulk properties on the other, to cover a good range in scale. The first set 'A' was selected as a small A5 size panel of 149mm x 210mm with three different bulk mechanical properties. These were A5-1, polycarbonate skin on polycarbonate honeycomb; A5-2 carbon fibre on Rohacell; and A5-3, Rohacell without skin. Set 'B' was chosen to be eight times larger, approximately to A2 size of 420mm x 592mm. A2-1 was constructed with glass fibre skin on polycarbonate honeycomb core, whilst A2-2 was carbon fibre skin on aluminium honeycomb. Table 1 lists the bulk properties of these objects. Actuation was achieved by a single electrodynamic moving coil exciter at the optimum position. Two exciter types were used, where they suited most the

size of the panels under test. In the case of A2 panels a 25mm exciter was employed with Bl = 2.3 Tm, Re = 3.7 Ω and Le - 60 μH, whilst a 13mm model was used in the case of the smaller A5 panels with Bl - 1.0 Tm, Re=7.3 Ω and Le=36 μH.

| Panel | Type | B (Nm) | μ ($Kg/m^2$) | Zm (Ns/m) | Size (mm) |
|---|---|---|---|---|---|
| A2-1 | Glass on PC Core | 10.4 | 0.89 | 24.3 | 5 x 592 x 420 |
| A2-2 | Carbon on AI Core | 57.6 | 1.00 | 60.0 | 7.2 x 592 x 420 |
| A5-1 | PC on PC core | 1.39 | 0.64 | 7.5 | 2 x 210 x 149 |
| A5-2 | Carbon on Rohacell | 3.33 | 0.65 | 11.8 | 2 x 210 x 149 |
| A5-3 | Rohacell core | 0.33 | 0.32 | 2.7 | 3 x 210 x 149 |

Panels were mounted onto a back enclosure with adjustable depth using a soft polyurethane foam for suspension and acoustic seal. The enclosure depth was made adjustable on 16,28,40 and 53mm for set 'A' and on 20,50,95 and 130mm for set 'B' panels. Various measurements were carried out at different enclosure depths for every test case and result documented.

Panel velocity and displacement were measured using a Laser Vibrometer. The frequency range of interest was covered with a linear frequency scale of 1600 points. The set-up shown in Figure 16 was used to measure the panel mechanical impedance by calculating the ratio of the applied force to the panel velocity at the drive point.

In this procedure, the applied force was calculated

from the lump parameter information of the exciter. Although panel velocity in itself feeds back into the electromechanical circuit, its coupling is quite weak. It can be shown that for small values of exciter Bl,(1-3 Tm), providing that the driving amplifier output impedance is low (constant voltage), the modal coupling back to the electromechanical system is sufficiently weak to make this assumption plausible. Small error arising from this approximation was therefore ignored. Figures 18a to f show the mechanical impedance of the A5-1 and A5-2 panels, derived from the measurement of panel velocity and the applied force measured by the Laser Vibrometer. Note that the impedance minima for each enclosure depth occur at the system resonance mode.

Sound pressure level and polar response of the various panels were measured in a large space of 350 cubic metres and gated at 12 to 14ms for anechoic response using MLSSA, depending on the measurement. Power measurements were carried out employing a 9-microphone array system, as shown in Figure 17d and in a set-up shown in Figure 17a. These are plotted in Figures 19a to f for various enclosure depths. System resonance is highlighted by markers on the graphs.

Polar response of the A5-1 and A5-2 panels were measured for a 28mm deep enclosure and the result is shown in Figures 20a and b. When compared with the polar plot of the free DML in Figure 1, they demonstrate the significance of the closed-back DML in its improved directivity.

To investigate further the nature and the effect of enclosure on the panel behaviour, especially at the combined system resonance, a special jig was made to allow the measurement of the internal pressure of the enclosure at nine predetermined points as shown in Figure 21. The microphone was inserted in the holes provided within the back-plate of an A5 enclosure jig at a predetermined depth, while the other eight position holes were tightly blocked with hard rubber grommets. The microphone was mechanically isolated from the enclosure by an appropriate rubber grommet during the measurement.

From this data, a contour plot was created to show the pressure distribution at system resonance and that either side of this frequency as shown in Figures 22a to c. The pressure frequency response was also plotted for the nine positions as shown in Figure 27. This graph exhibits good definition in the region of resonance for all curves associated with the measurement points within the enclosure. However, the pressure tends to vary across the enclosure cross-sectional area as the frequency is increased.

The normal component of velocity and displacement across the panels was measured with a Scanning Laser Vibrometer. The velocity and displacement distribution across the panels were plotted to investigate the behaviour of the panel around the coupled system resonance. The results were documented and a number of the cases are shown in Figures 24a to d. These results suggest a timpanic

modal behaviour of the panel at resonance, with the whole of the panel moving, albeit at a lesser velocity and displacement as one moves towards the panel edges.

In practice this behaviour is consistent for all boundary conditions of the panel, although the mode shape will vary from case to case depending on a complex set of parameters, including panel stiffness, mass, size and boundary conditions. In the limit and for an infinitely rigid panel, this system resonance will be seen as the fundamental rigid body mode of the piston acting on the stiffness of the enclosure air volume. It was found to be convenient to call the DML system resonance, the 'Whole Body Mode' or WBM.

The full theoretical derivations of the coupled system has been implemented in a suite of software by New Transducers Limited. A version of this package was used to simulate the mechanoacoustical behaviour of our test objects in this paper. This package is able to take into account all the electrical, mechanical and acoustical variables associated with a panel, exciter(s) and mechanoacoustical interfaces with a frame or an enclosure and predict, amongst other parameters, the far-field acoustic pressure, power and directivity of the total system.

Figure 25a shows the log-velocity spectrum of a free radiating, A5-1 panel clamped in a frame, radiating in free space equally from both sides. The solid line represents the simulation curve and the dashed line is the measure

velocity spectrum. At low frequencies the panel goes in resonance with the exciter. The discrepancy in the frequency range above 1000 Hz is due to the absence of the free field radiation impedance in the simulation model.

Figure 25b shows the same panel as in Figure 25a but this time loaded with two identical enclosures, one on each side of the panel, with the same cross-section as the panel and a depth of 24mm. A double enclosure was designed and used in order to exclude the radiation impedance of free field on one side of the panel and make the experiment independent of the free field radiation impedance. It is important to note that this laboratory set-up was used for theory verification only.

In order to enable velocity measurement of the panel, the back walls of the two enclosures were made from a transparent material to allow access by the laser beam to the panel surface. This test was repeated using panel A5-3 Rohacell without skin, with different bulk properties and the result is shown in Figures 26a and b. In both cases simulation was performed using 200 point logarithmic range, whilst the laser measurement used 1600 point linear range.

From the foregoing theory and work, it is clear that a small enclosure fitted to a DML will bring with it, amongst a number of benefits, a singular drawback. This manifests itself in an excess of power due to WBM at the system resonance as shown in Figures 27a and b. It is noteworthy that apart from this peak, in all other aspect the enclosed DML can offer a substantially improved performance

including increased power bandwidth.

It has been found that in most cases a simple second order band-stop equalisation network of appropriate Q matching that of the power response peak, may be designed to equalise the response peak. Furthermore in some cases a single pole high-pass filter would often adjust for this by tilting the LF region, to provide a broadly flat power response. Due to the unique nature of DML panels and their resistive electrical impedance response, whether the filter is active or passive, its design will remain very simple. Figure 28a shows where a band-stop passive filter has been incorporated for equalisation. Further examples may be seen in Figures 28b and c that show simple pole EQ with a capacitor used in series with the loudspeakers.

When a free DML is used near and parallel to a wall, special care must be taken to ensure minimal interaction with the latter, due to its unique complex dipolar characteristics. This interaction is a function of the distance to the boundary, and therefore, cannot be universally fixed. Full baffling of the panel has definite advantages in extending the low frequency response of the system, but this may not be a practical proposition in a large number of applications.

A very small enclosure used with a DML will render it independent of its immediate environment and make the system predictable in its acoustical performance. The mathematical model developed demonstrates the level of complexity for a DML in the coupled system. This throws a

sharp contrast between the prediction and design of a DML and that of the conventional piston radiator. Whilst the mechanoacoustical properties of a cone-in-box may be found by relatively simply calculations (even by a hand calculator) those associated with a DML and its enclosure are subject to complex interactive relationships which render this system impossible to predict without the proper tools.

The change in system performance with varying enclosure volume is quite marked in the case where the depth is small compared with the panel dimensions. However, it is also seen that beyond a certain depth the increase in LF response become marginal. This of course is consistent with behaviour of a rigid piston in an enclosure. As an example, an A2 size panel with 50mm enclosure depth can be designed to have a bandwidth extending down to about 120Hz, Figure 24.

Another feature of a DML with a small enclosure is seen to be a significant improvement in the mid and high frequency response of the system. This is in many of the measured and simulated graphs in this paper and of course anticipated by the theory. It is clear that the increase in the panel system modality is mostly responsible for this improvement, however, enclosures losses might also influence this by increasing the overall damping of the system.

As a natural consequence of containing the rear radiation of the panel, the directivity of the enclosed

system changes substantially from a dipolar shape to a near cardioid behaviour as shown in Figure 17. It is envisaged that the directivity associated with a closed-back DML may find use in certain applications where stronger lateral coverage is desirable.

Power response measurements were found to be most useful when working with the enclosed DM system, in order to observe the excessive energy region that may need compensation. This is in line with other work done on DM loudspeakers, in which it has been found that the power response is the most representative acoustic measurement correlating well to the subjective performance of a DML. Using the power response, it was found that in practice a simple band-pass or a single pole high-pass filter is all that is needed to equalise the power response in this region.

CLAIMS

1. An acoustic device comprising a resonant multi-mode acoustic panel having opposed faces, means defining a cavity enclosing at least a portion of one panel face and arranged to contain acoustic radiation from the said portion of the panel face, wherein the cavity is such as to modify the modal behaviour of the panel.

2. An acoustic device according to claim 1, wherein the cavity size is such as to modify the modal behaviour of the panel.

3. An acoustic device according to claim 2, wherein the cavity is shallow.

4. An acoustic device according to claim 3, wherein the cavity is sufficiently shallow that the rear face of the cavity facing the said one panel face causes fluid coupling to the panel.

5. An acoustic device according to claim 4, wherein X and Y cross modes are generally dominant.

6. An acoustic device according to any preceding claim, wherein the cavity is sealed.

7. An acoustic device according to any preceding claim, wherein the ratio of the cavity volume to panel area ($ml:cm^2$) is in the range about 10:1 to 0.2:1.

8. An acoustic device according to any preceding claim, wherein the panel is mounted in and sealed to the cavity defining means by a peripheral surround.

9. An acoustic device according to claim 8, wherein the surround is resilient.

10. A loudspeaker comprising an acoustic device as claimed in any preceding claim, and having a vibration exciter arranged to apply bending wave vibration to the resonant panel to produce an acoustic output.

11. A method of multiplying the modal behaviour of a resonant panel acoustic device, comprising bringing the resonant panel into close proximity with a boundary surface to define a resonant cavity therebetween.

ABSTRACT

TITLE: ACOUSTIC DEVICE

From one aspect the invention is an acoustic device, e.g. a loudspeaker, comprising a resonant multi-mode acoustic radiator panel having opposed faces, a vibration exciter arranged to apply bending wave vibration to the resonant panel to produce an acoustic output, means defining a cavity enclosing at least a portion of one panel face and arranged to contain acoustic radiation from the said portion of the panel face, wherein the cavity is such as to modify the modal behaviour of the panel.

From another aspect the invention is a method of modifying the modal behaviour of a resonant panel acoustic device, comprising bringing the resonant panel into close proximity with a boundary surface to define a resonant cavity therebetween.

(Fig.1)

CLAIMS

1. A loudspeaker drive unit comprising a visual display screen, a resonant panel-form member positioned adjacent to the display screen and at least a portion of which is transparent and through which the display screen is visible, and vibration exciting means to cause the panel-form member to resonate to act as an acoustic radiator.

2. A loudspeaker drive unit according to claim 1, wherein the whole of the resonant panel-form member is transparent.

3. A loudspeaker drive unit as claimed in claim 1 or claim 2, wherein the resonant panel-form member is of plastics.

4. A loudspeaker drive unit as claimed in any one of claims 1 to 3, wherein the resonant panel-form member is of polystyrene, polycarbonate or glass or a laminate of plastics and glass.

5. A loudspeaker drive unit according to any preceding claim, wherein the panel-form member is a laminate comprising a core of plastics or aerogel with skins of glass.

6. A loudspeaker drive unit according to any preceding claim, comprising more than one vibration exciting means.

7. A loudspeaker drive unit according to any preceding claim, wherein the or each vibration exciting means is mounted to an edge or marginal portion of the panel-form member.

8. A loudspeaker drive unit according to any preceding

claim, comprising vibration exciters mounted in pairs to an edge or edges or marginal portions of the panel-form member.

9. A loudspeaker drive unit according to any preceding claim, wherein the or each vibration exciting means is coupled directly to the panel-form member.

10. A loudspeaker drive unit according to any preceding claim, wherein the vibration exciting means is electrodynamic.

11. A loudspeaker drive unit according to any preceding claim, wherein the vibration exciting means is inertial.

12. A loudspeaker drive unit according to any preceding claim, comprising associated supporting means in which the drive unit is mounted.

13. A loudspeaker drive unit according to claim 12, wherein the associated supporting means is a frame or chassis.

14. A loudspeaker drive unit according to claim 12 or claim 13, wherein the resonant panel-form member is resiliently supported on the associated supporting means.

15. A loudspeaker drive unit according to any one of claims 12 to 14, wherein the or each vibration exciter is resiliently mounted in the associated supporting means.

16. A loudspeaker drive unit according to any one of claims 12 to 15, wherein the panel-form member is rectangular, and wherein the resilient panel support extends along at least three adjacent edges of the panel-form member.

17. A loudspeaker drive unit according to any one of claims 1 to 9 or 12 to 16, wherein the vibration exciter comprises a transparent piezoelectric or electret on or in at least a part of the panel-form member.

18. A loudspeaker drive unit according to any preceding claim, wherein one or more marginal portions of the panel-form member are clamped or restrained.

19. A loudspeaker drive unit according to claim 18, wherein the whole periphery of the panel-form member is mechanically clamped.

20. A loudspeaker drive unit according to any preceding claim, wherein panel-form member is mounted in an associated cavity defining means or enclosure enclosing a face of the panel-form member whereby acoustic radiation from the said face is at least partly contained within the enclosure or cavity.

21. A loudspeaker drive unit according to claim 20, wherein the enclosure or cavity is such as to modify the modal behaviour of the panel-form member.

22. A loudspeaker drive unit according to any preceding claim, wherein the display screen is integral with the panel-form member.

23. A loudspeaker according to claim 22, wherein the integral display screen comprises light emitting or transmitting or reflective means.

24. A loudspeaker drive unit according to any preceding claim, wherein the panel-form member forms the external face of a visual display unit or the like.

25. A loudspeaker drive unit according to any preceding claim, comprising a polymer-film liquid crystal display bonded or otherwise mounted on the panel-form member.

26. A loudspeaker drive unit according to any preceding claim, wherein the resonant panel-form member has a user-accessible surface and means on or associated with the surface and responsive to user contact.

27. A loudspeaker drive unit according to claim 26, comprising pads, areas, switches or buttons on the panel-form member and which provide a means for instructions or information to be entered.

28. A loudspeaker drive unit according to claim 26 or 27, comprising visible areas on the panel-form member and delineated by printing or labelling to sense the presence or contact by a user.

29. A loudspeaker drive unit according to any one of claims 26 to 28 comprising metallised user responsive contacts of transparent metal oxide film or thin metal film on the panel-form member.

30. A loudspeaker drive unit according to any one of claims 26 to 29, wherein the user responsive means is positioned at the perimeter of the panel-form member.

31. A loudspeaker comprising a loudspeaker drive unit as claimed in any preceding claim.

32. A display screen module comprising a loudspeaker drive unit as claimed in any preceding claim, and a chassis or frame supporting the display screen and resiliently supporting the transparent panel-form member.

33. A telephone receiver comprising a loudspeaker drive unit as claimed in any preceding claim.

34. A portable personal computer comprising a loudspeaker drive unit as claimed in any preceding claim.

35. A portable personal computer as claimed in claim 34, comprising a body having a key pad and a lid adapted to enclose the key pad and carrying a display screen, and wherein the display screen comprises a loudspeaker drive unit as claimed in any one of claims 1 to 30.

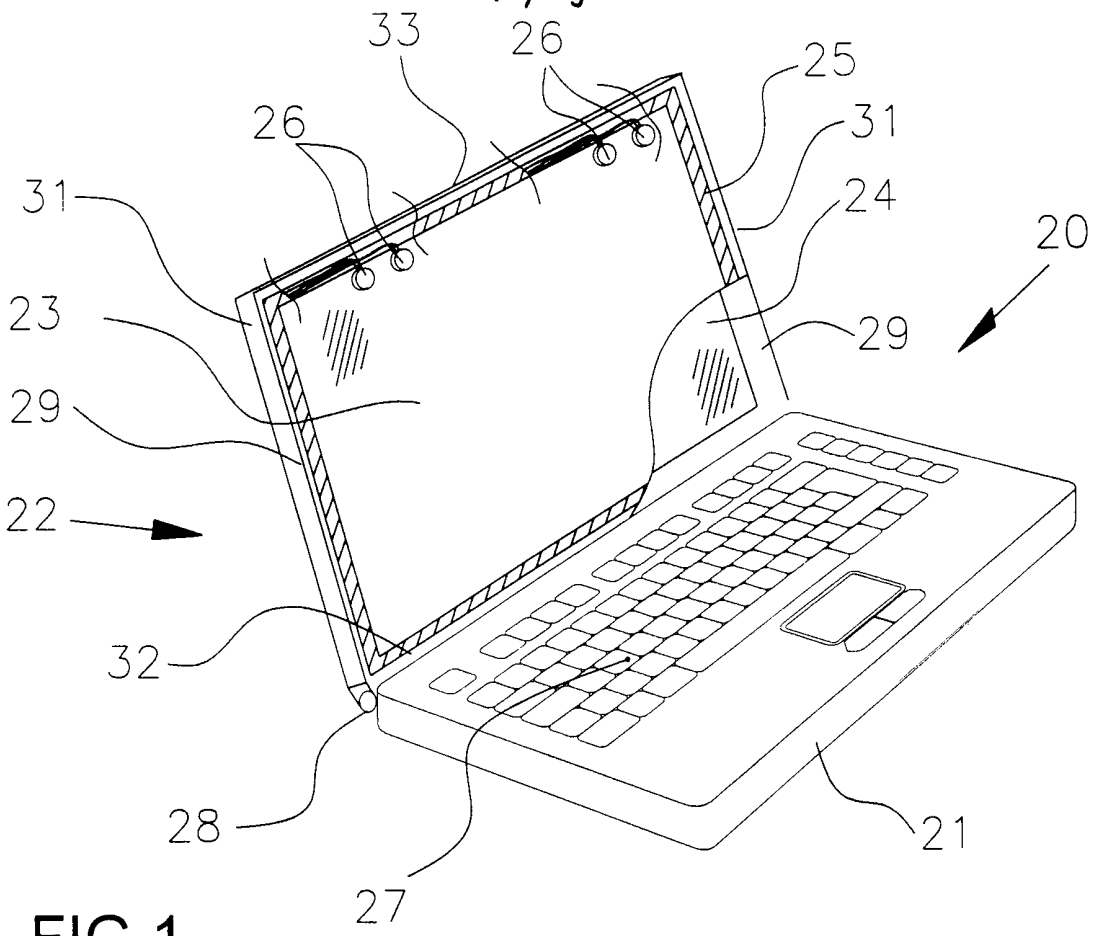
33
26
26
25
31
31
24
20
23
29
29
22
32
28
27
21

FIG.1

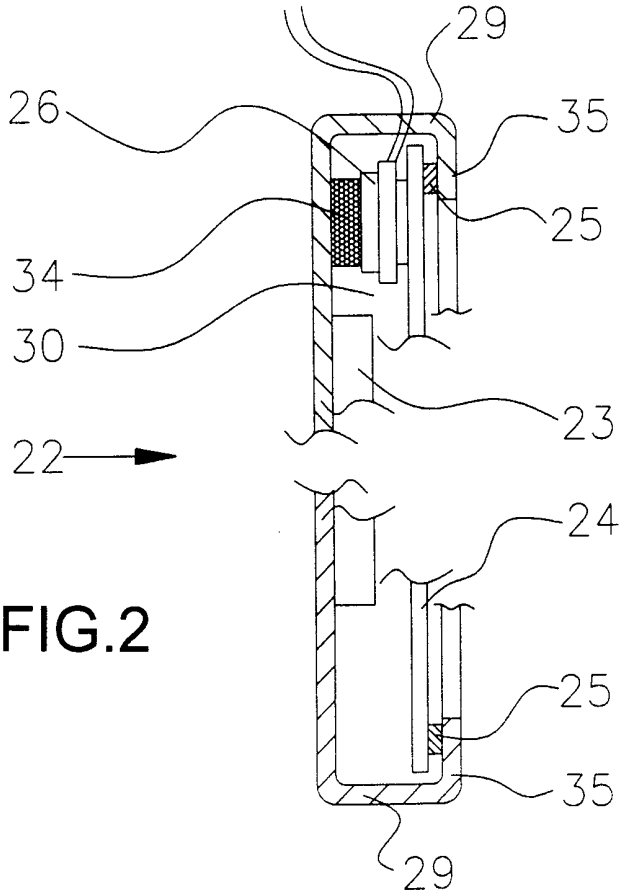
29
26
35
25
34
30
23
22
24
25
35
29

FIG.2

FIG.3

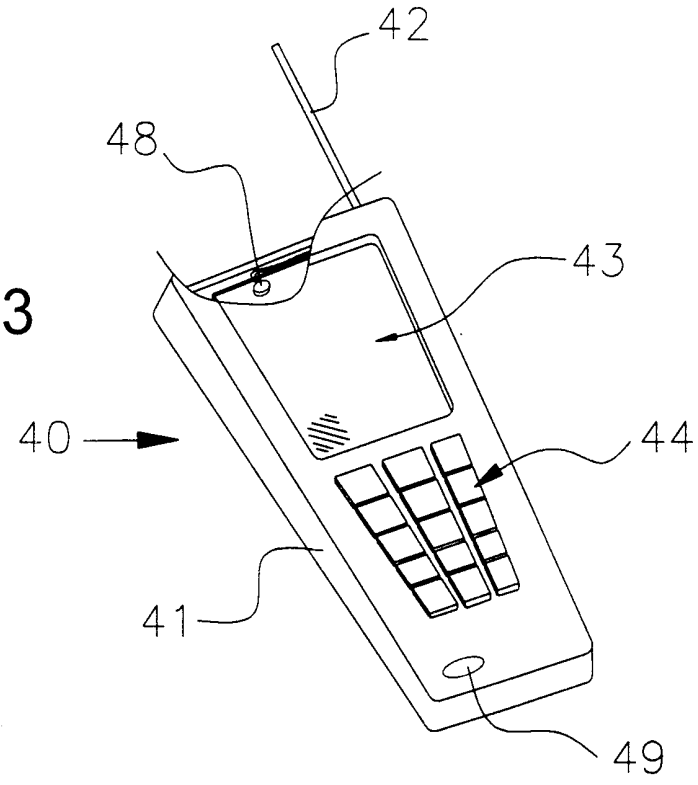


FIG.4

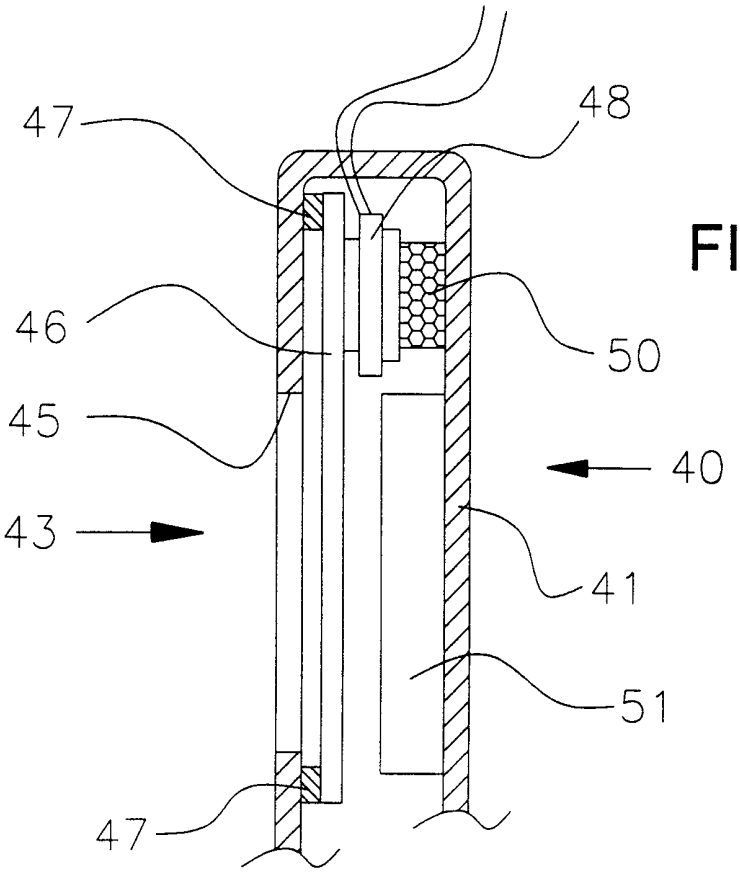

FIG.5

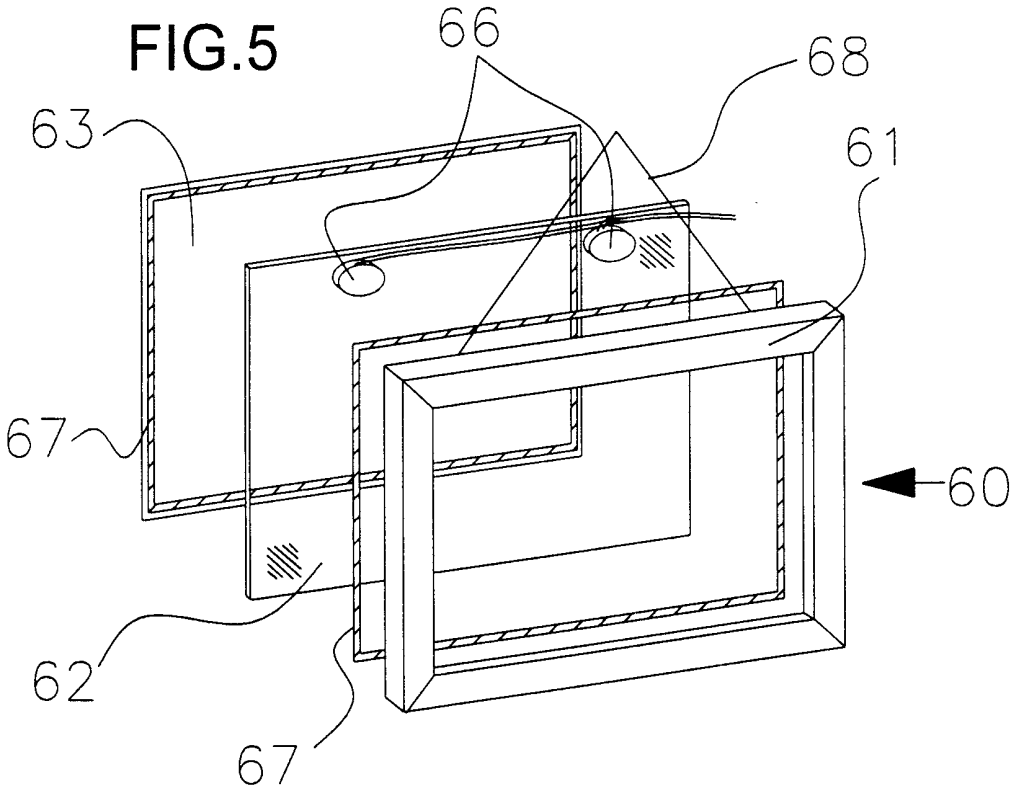


FIG.6

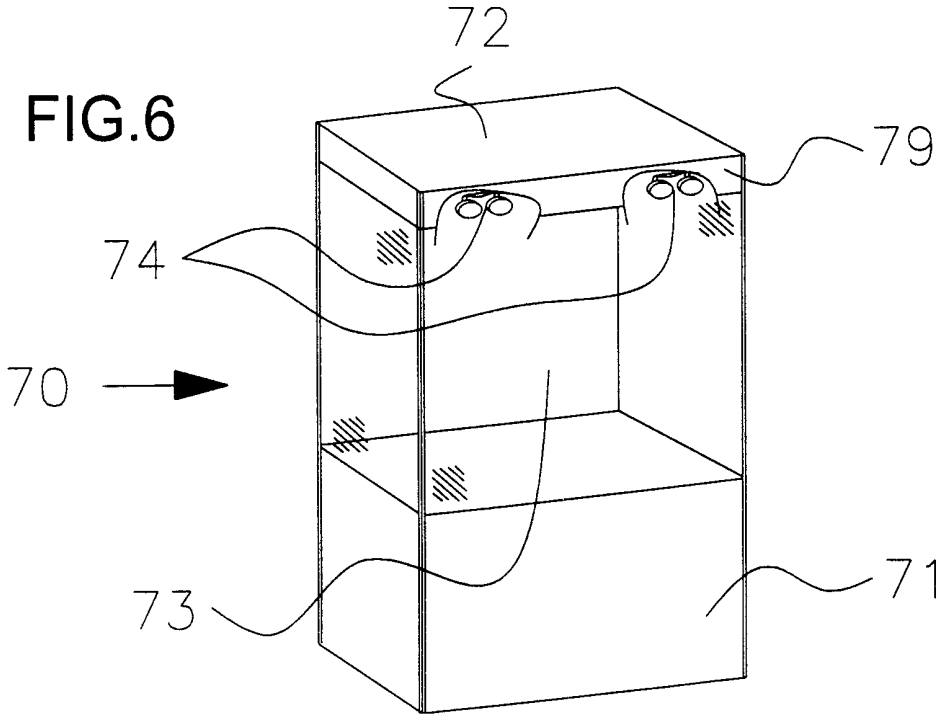

FIG.7a

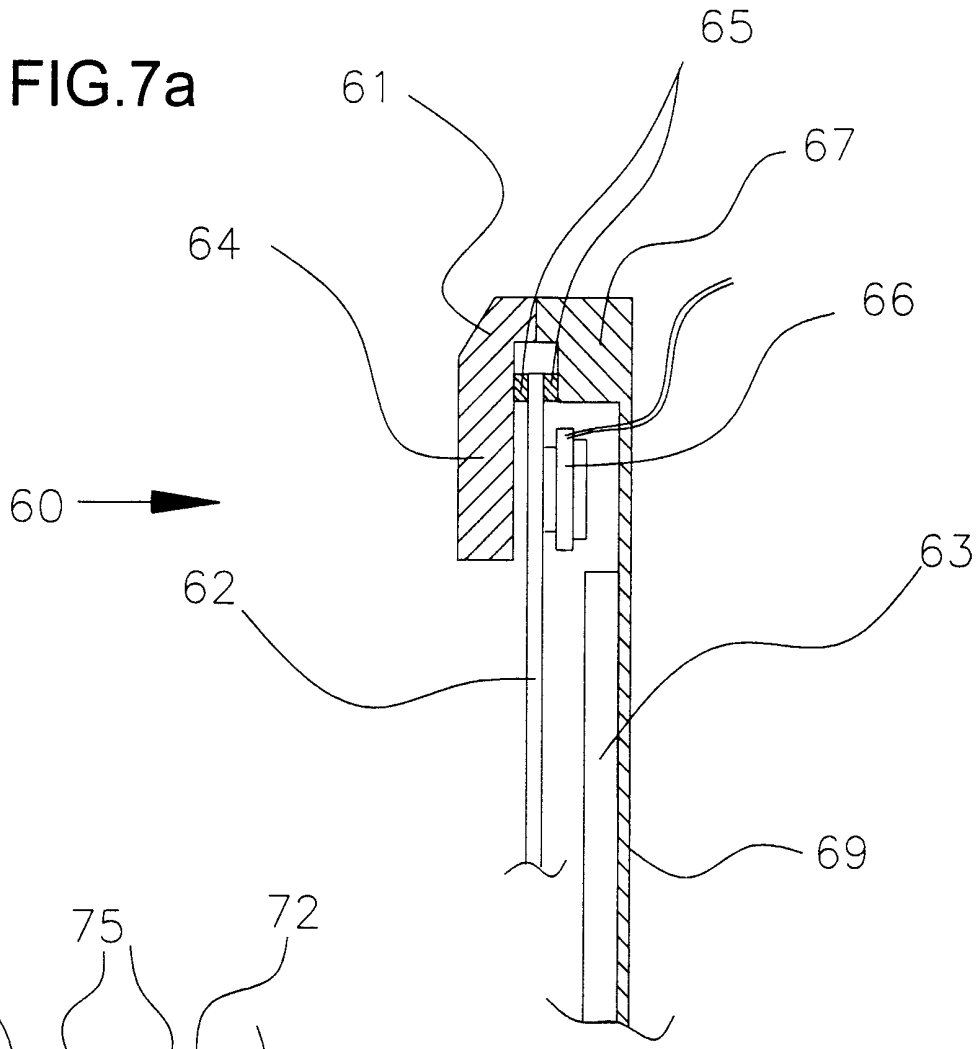


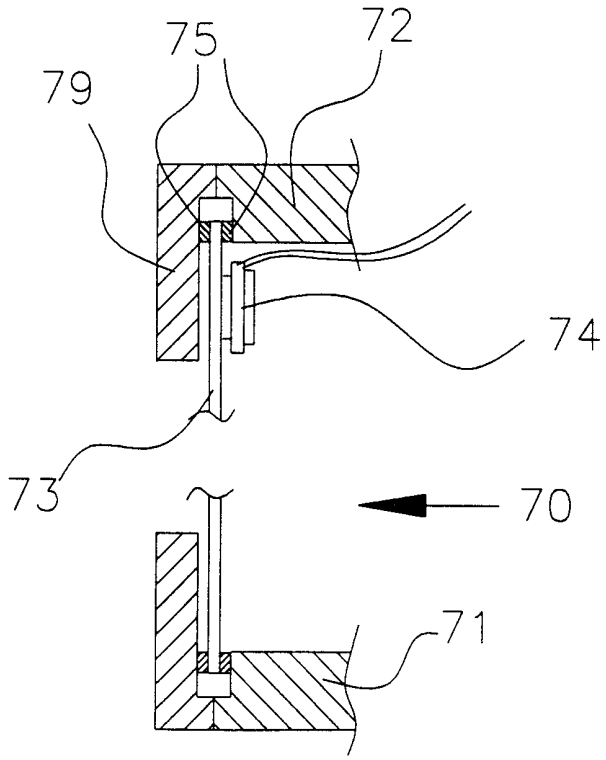


FIG.7b

FIG.8

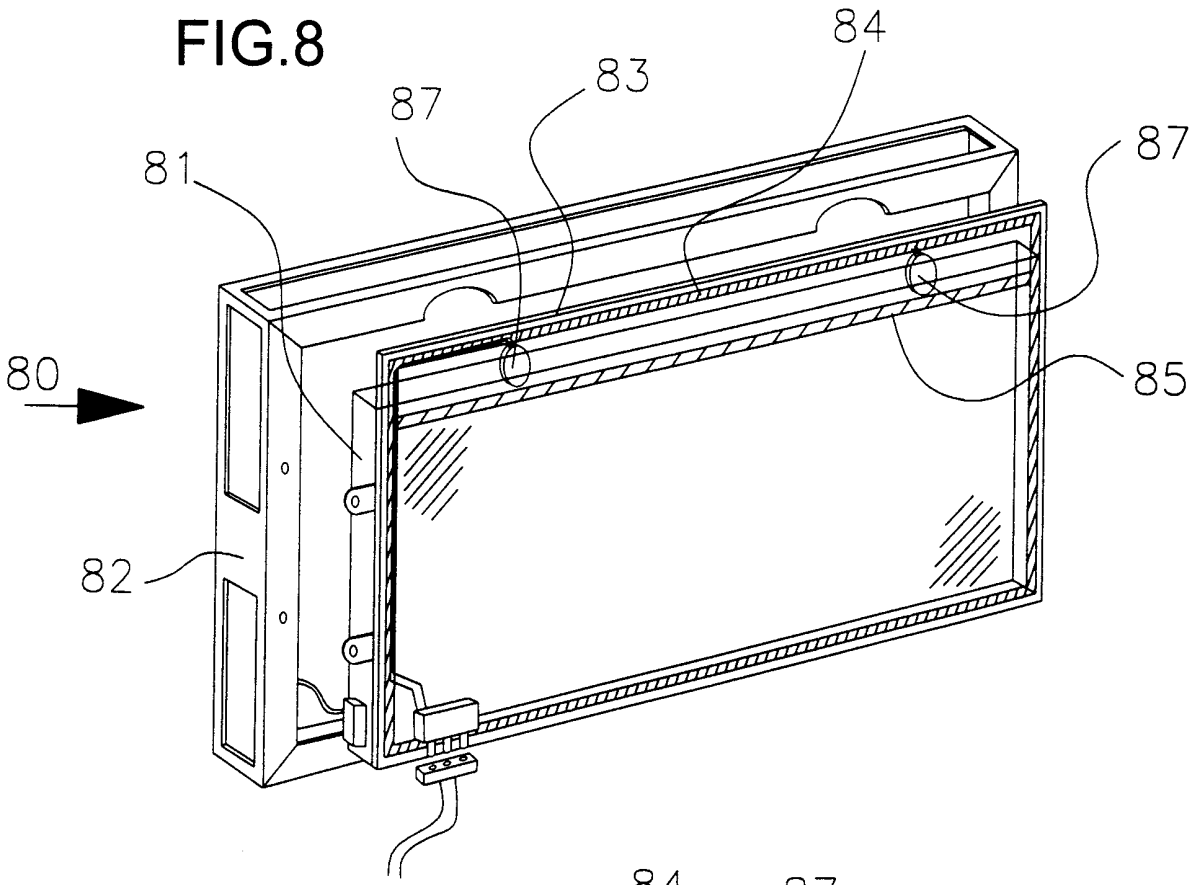


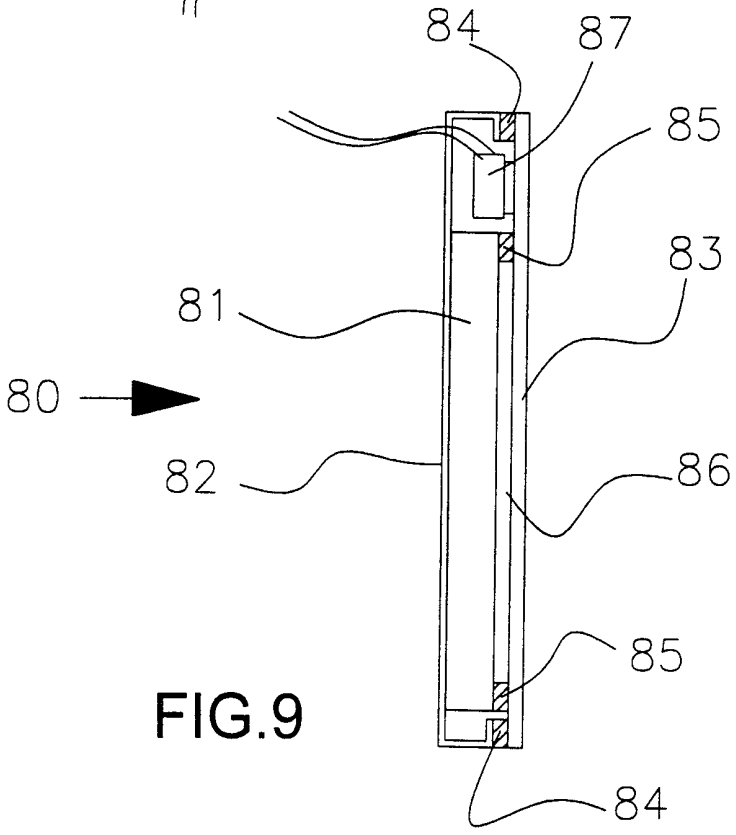


FIG.9

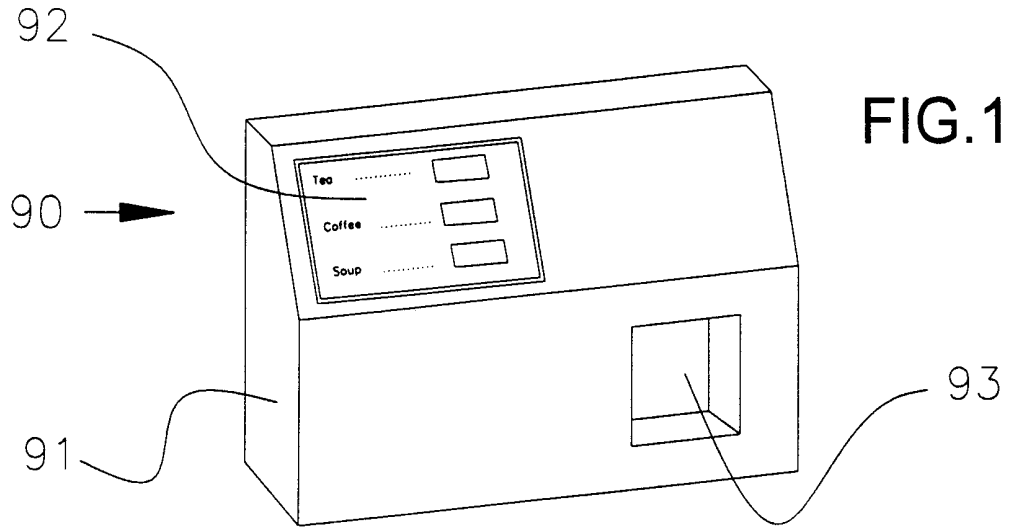


FIG.10

FIG.11

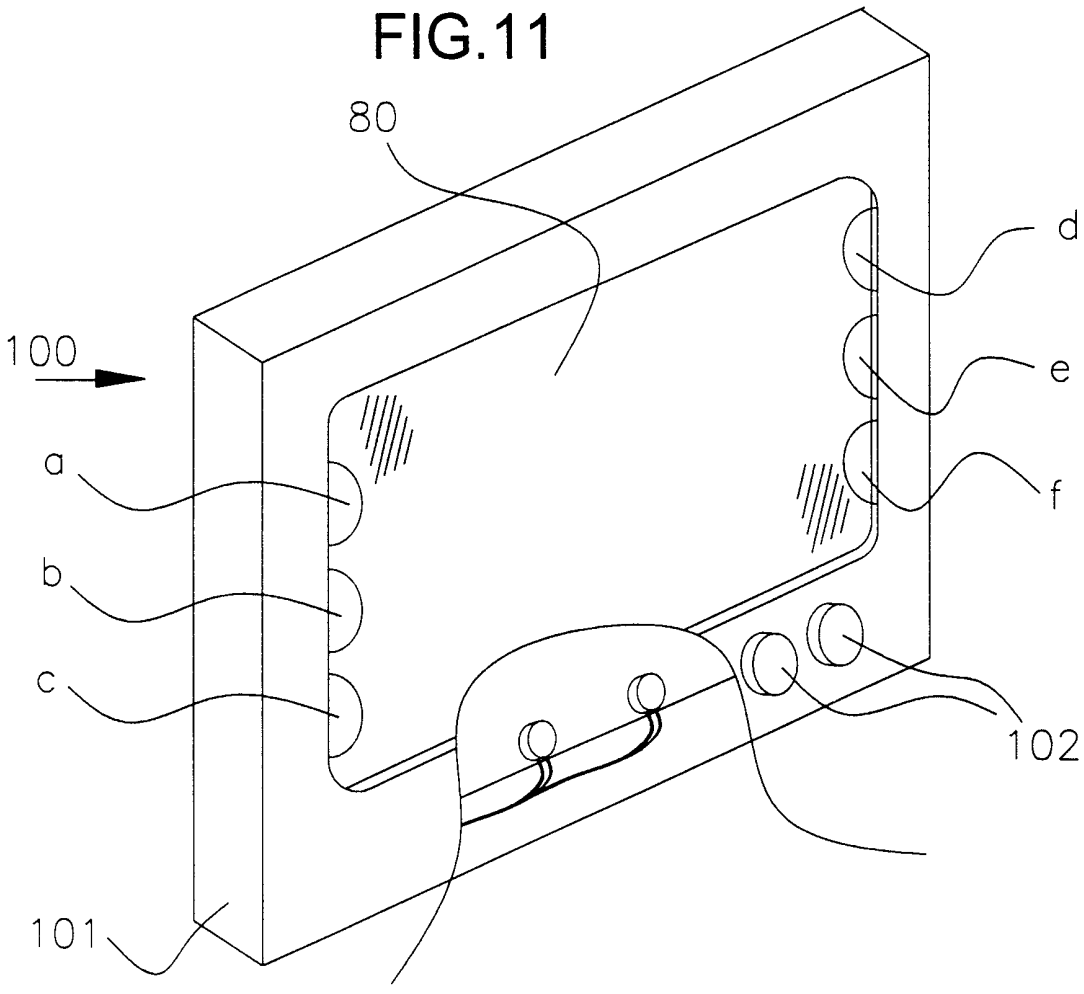

FIG.12

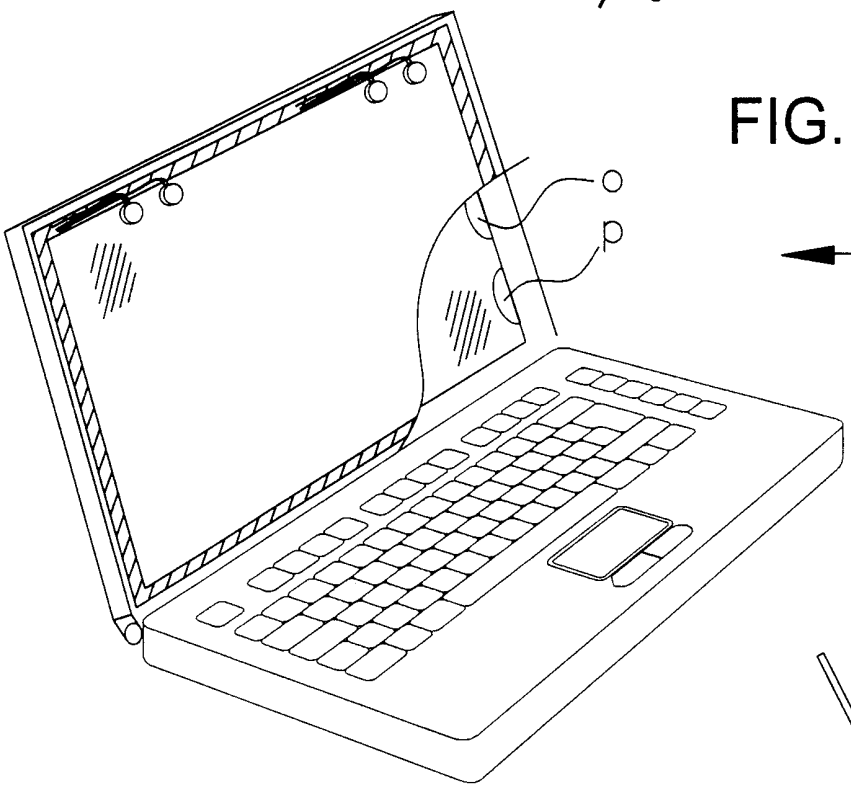


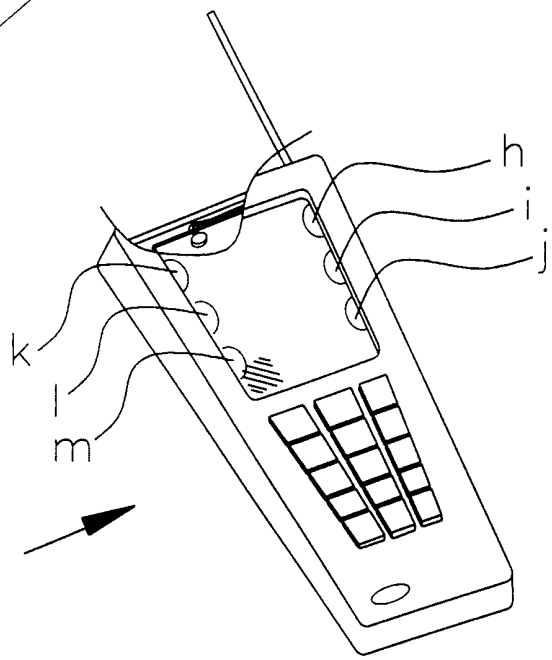


FIG.13

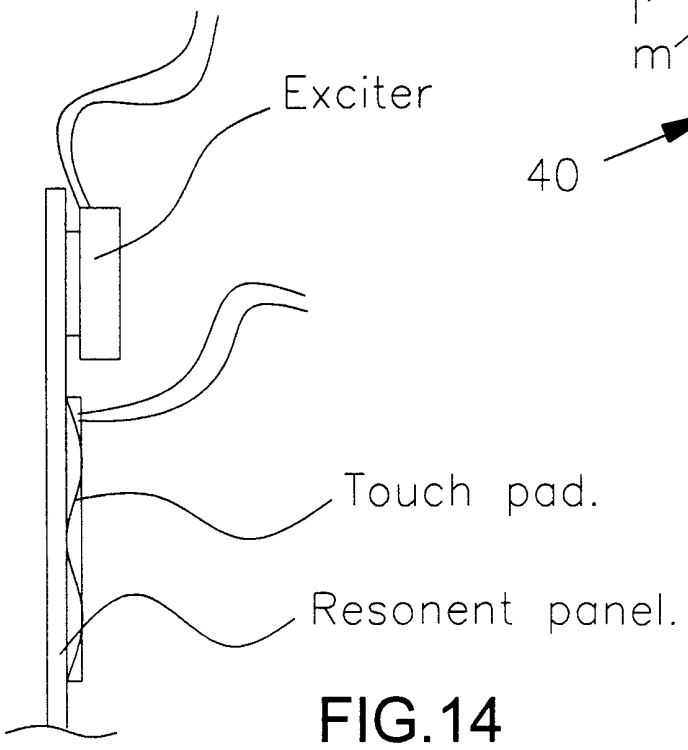


FIG.14

FIG.15

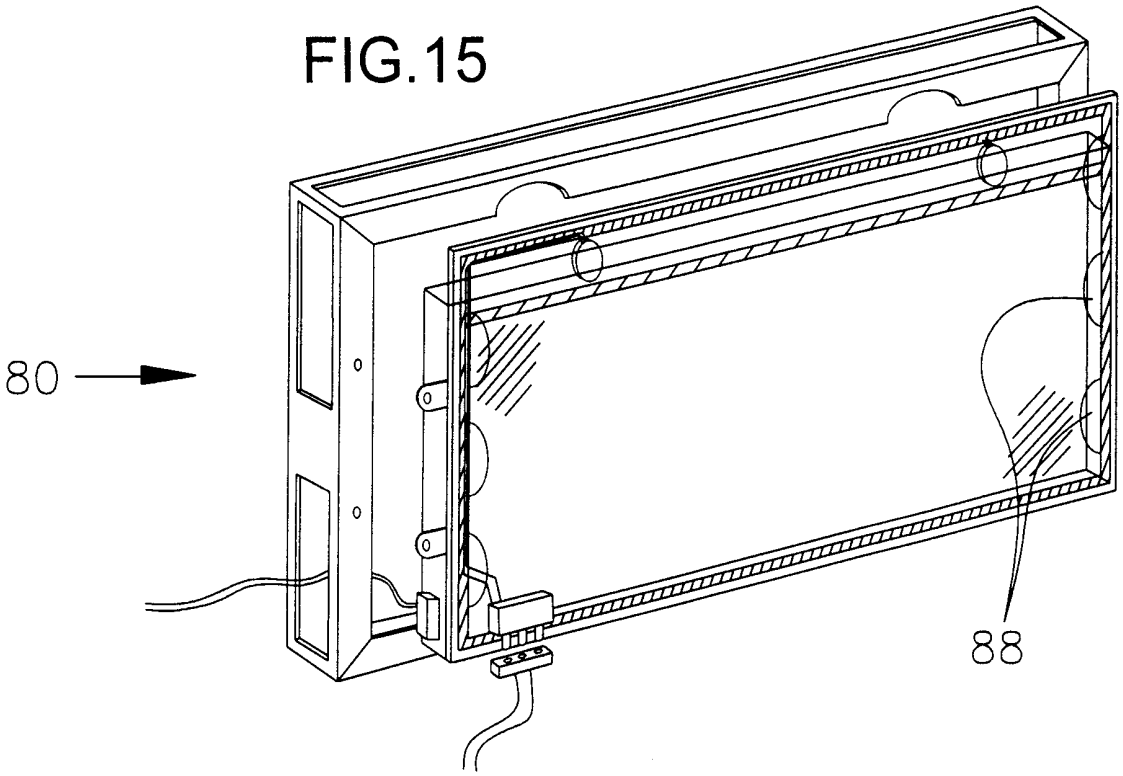


FIG.16

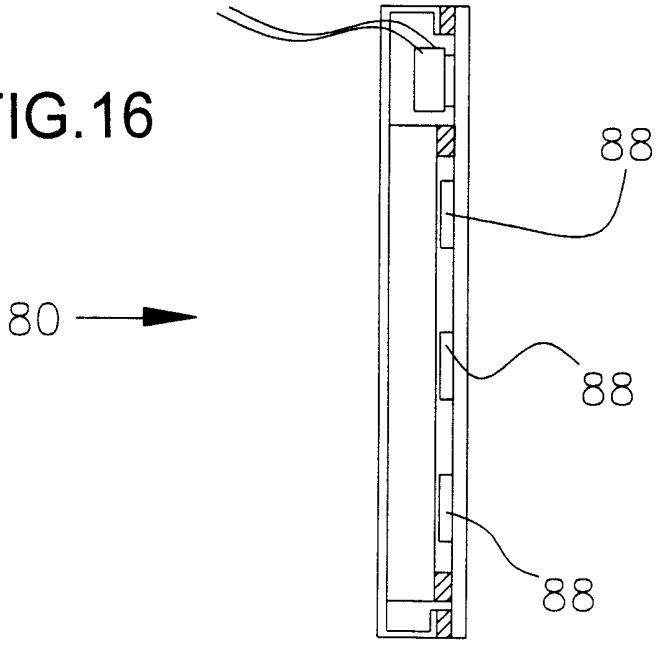

FIG.17

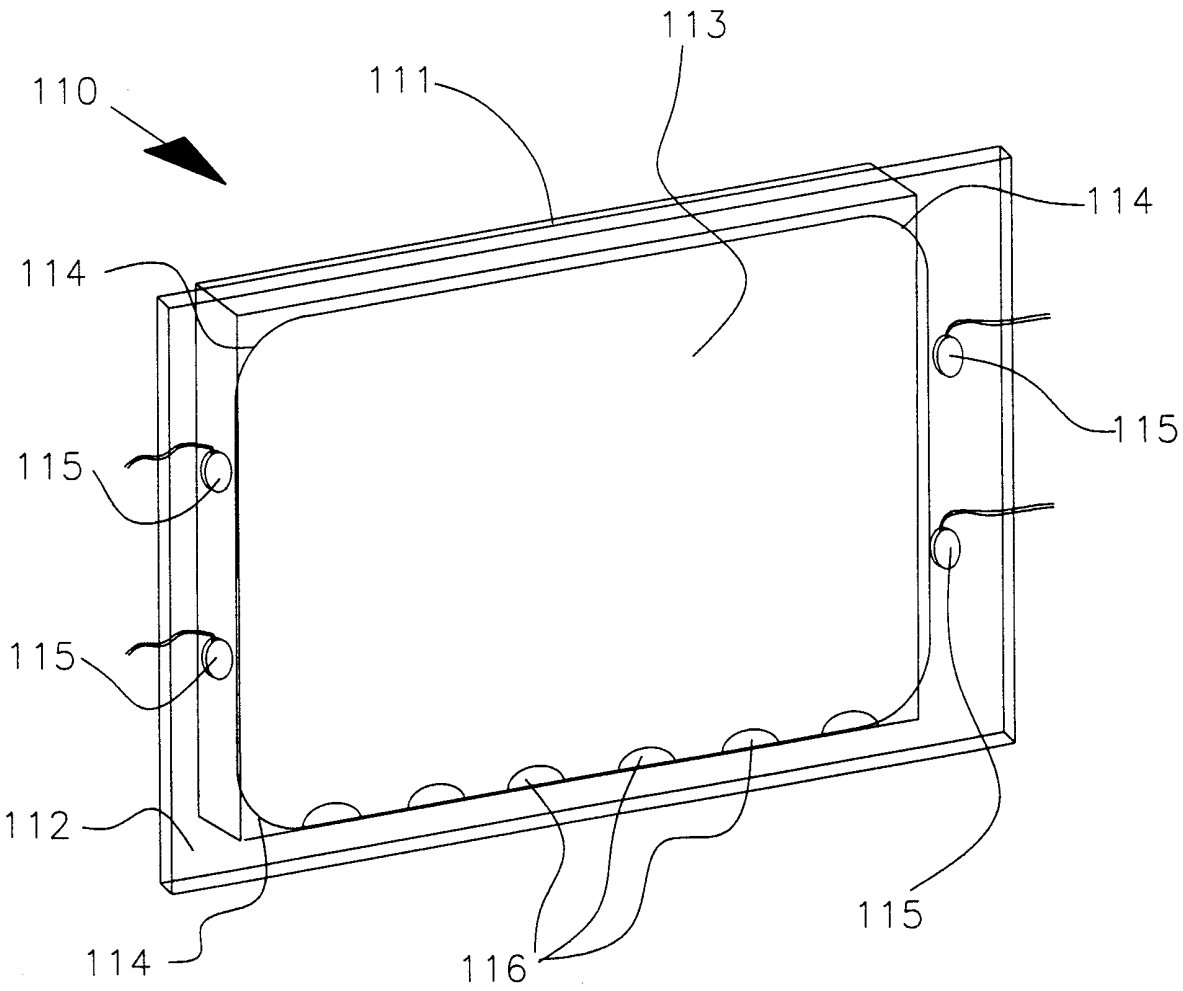

DRAWINGS ANNEX A



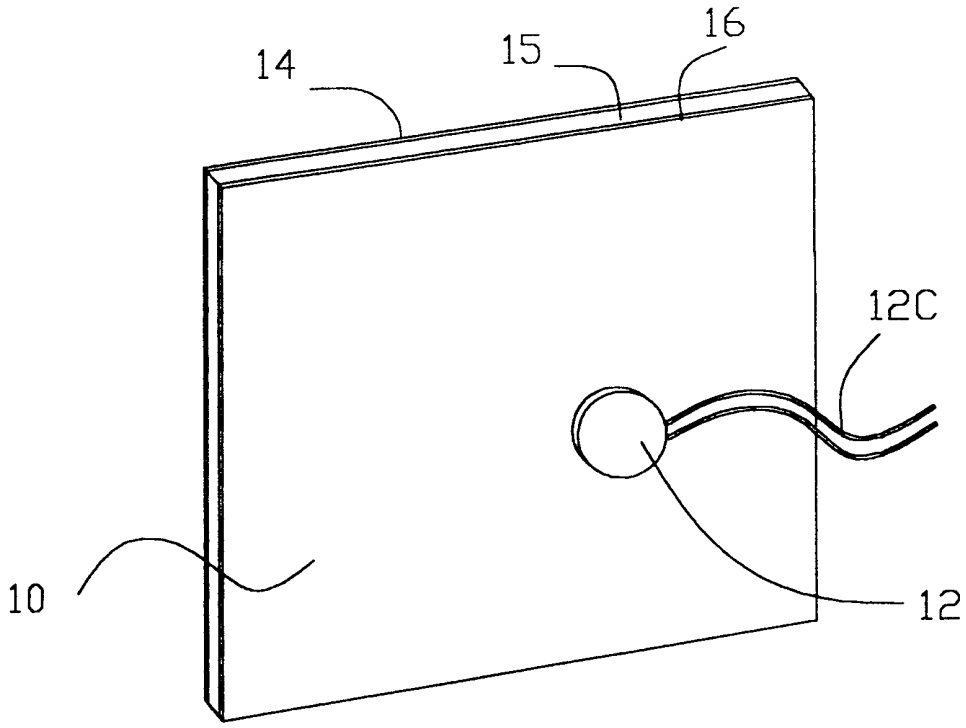


FIG.1

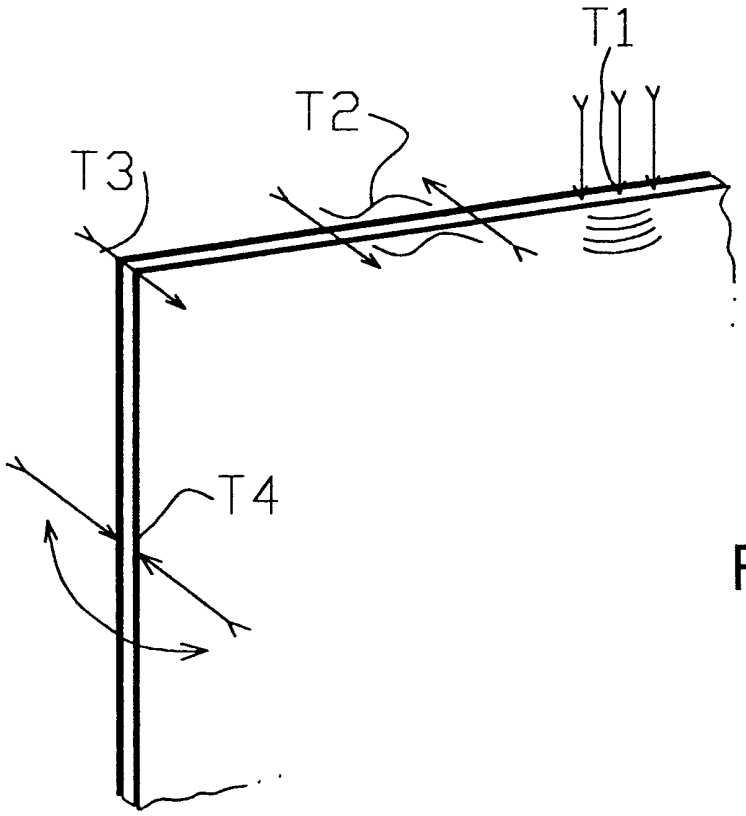


FIG.2

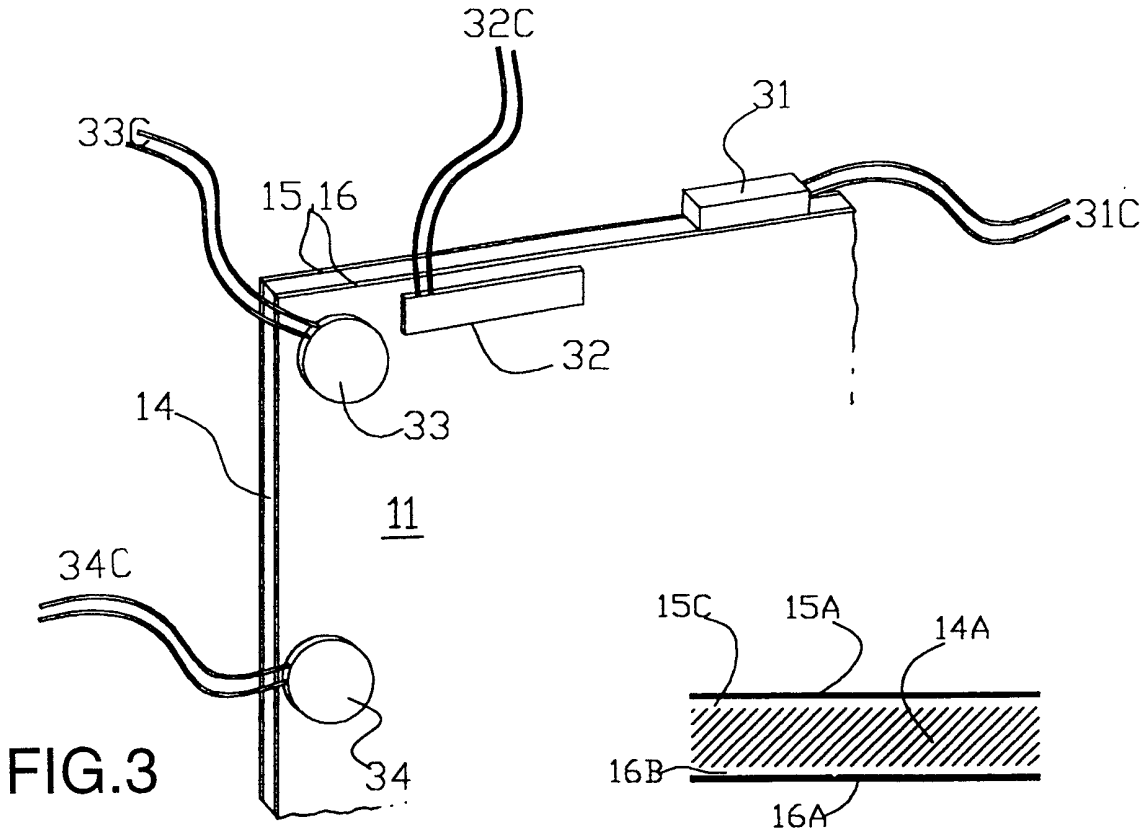


FIG.3




FIG.3A

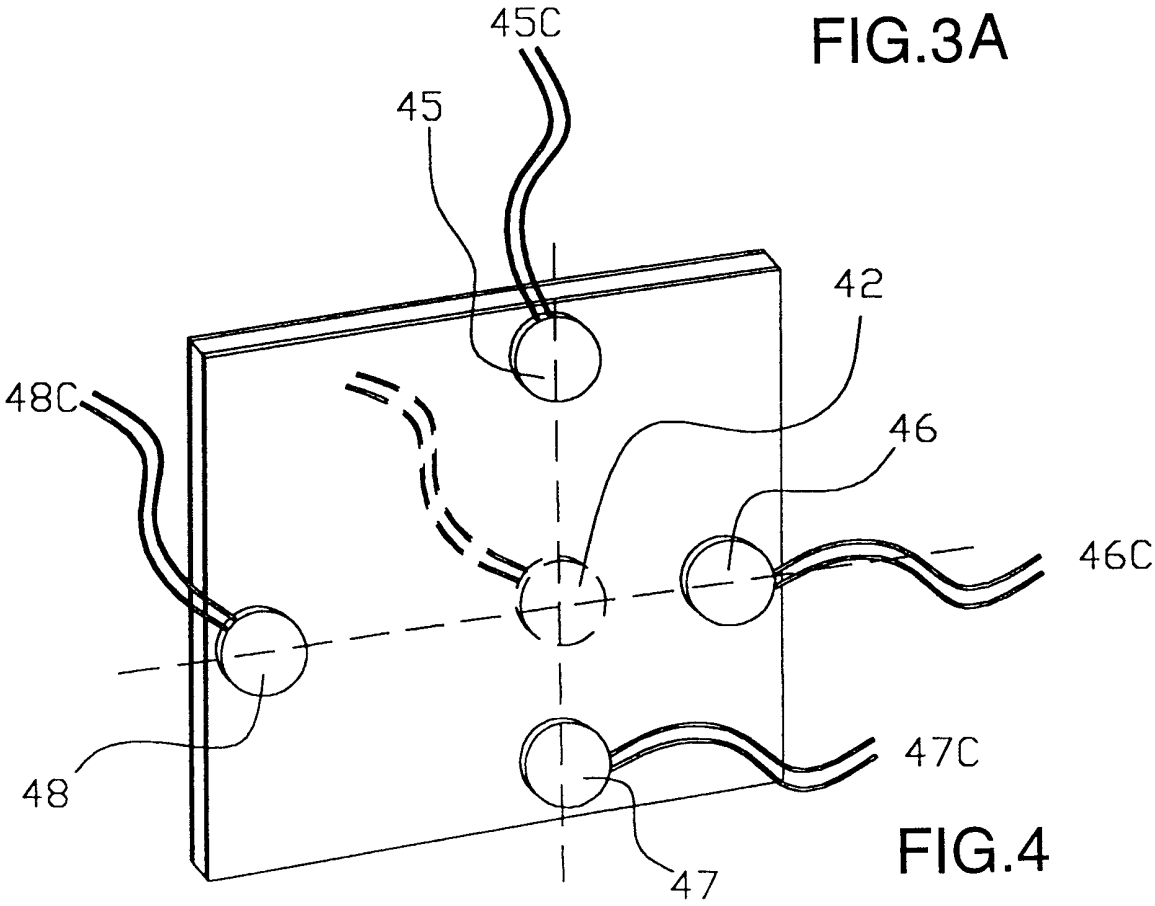


FIG.4

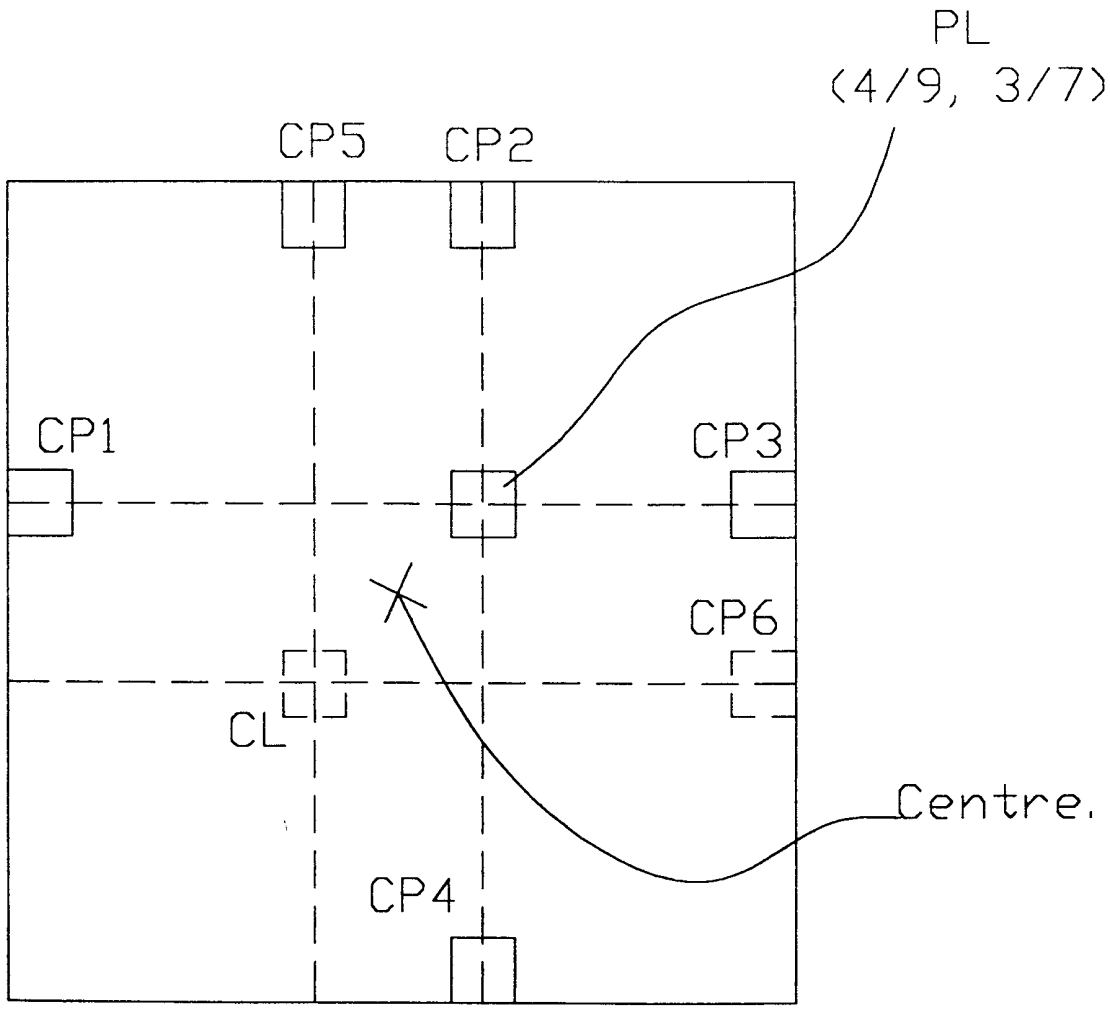


FIG.5

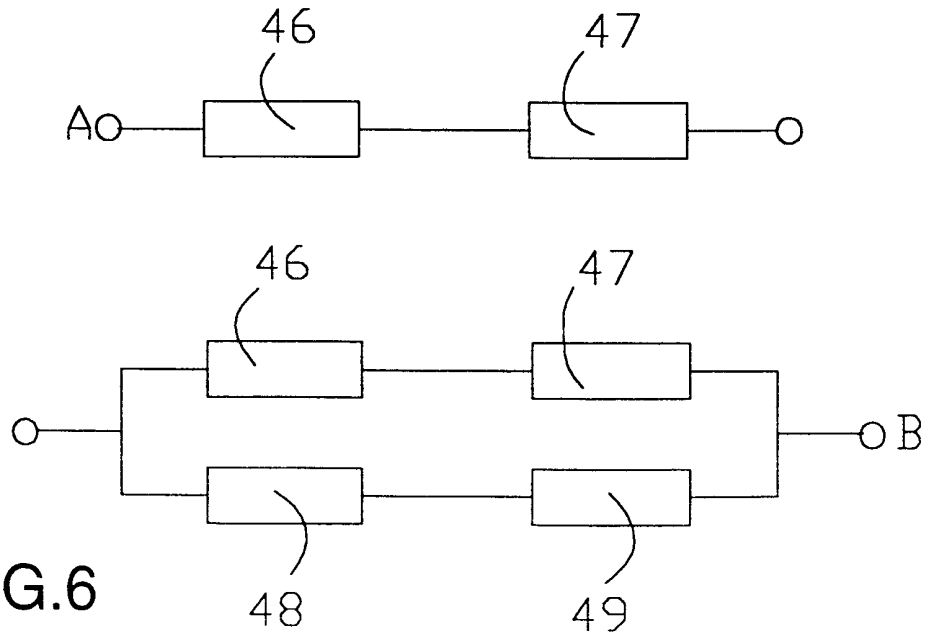


FIG.6

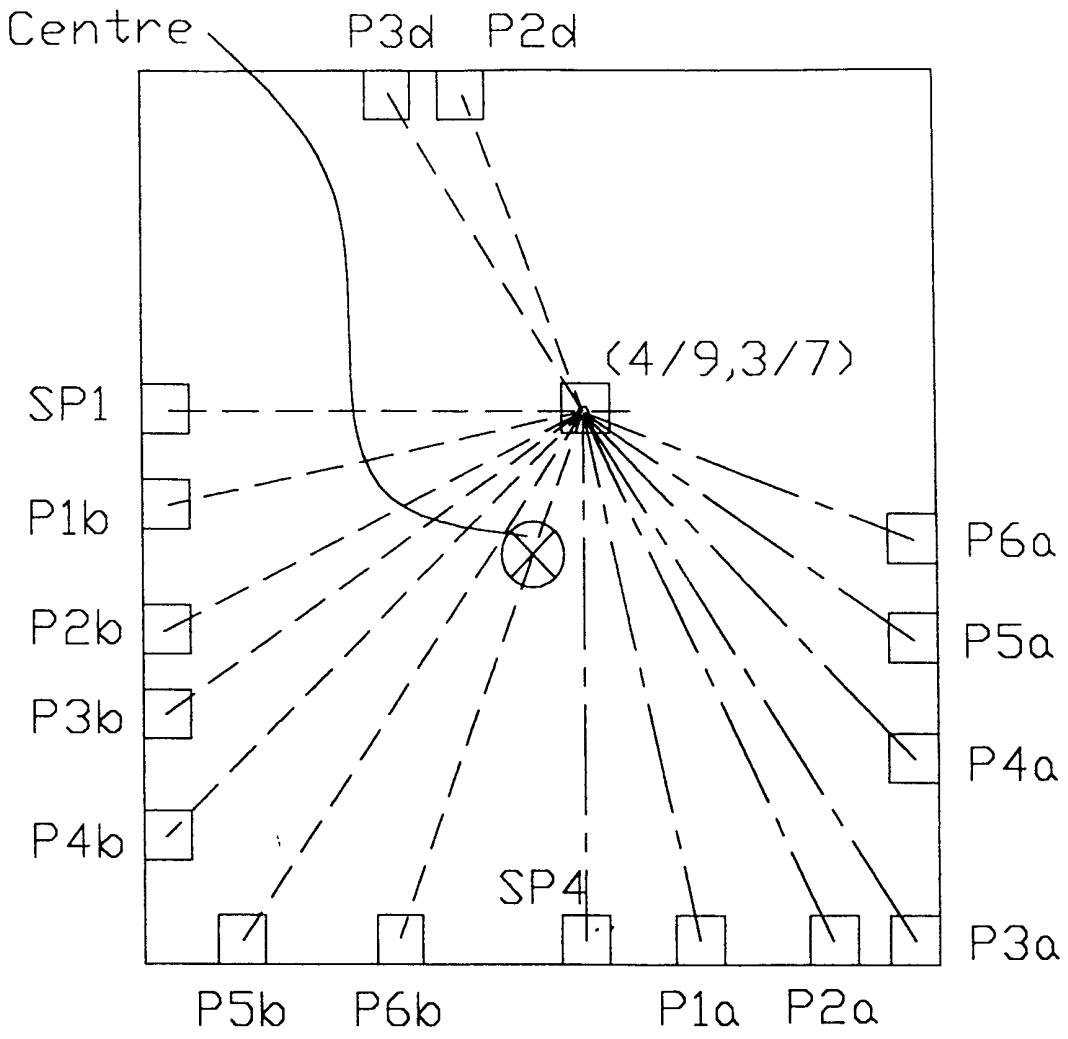
Centre
P3d
P2d
(4/9,3/7)
SP1
P1b
P2b
P3b
P4b
P6a
P5a
P4a
P3a
SP4
P5b
P6b
P1a
P2a

FIG.7

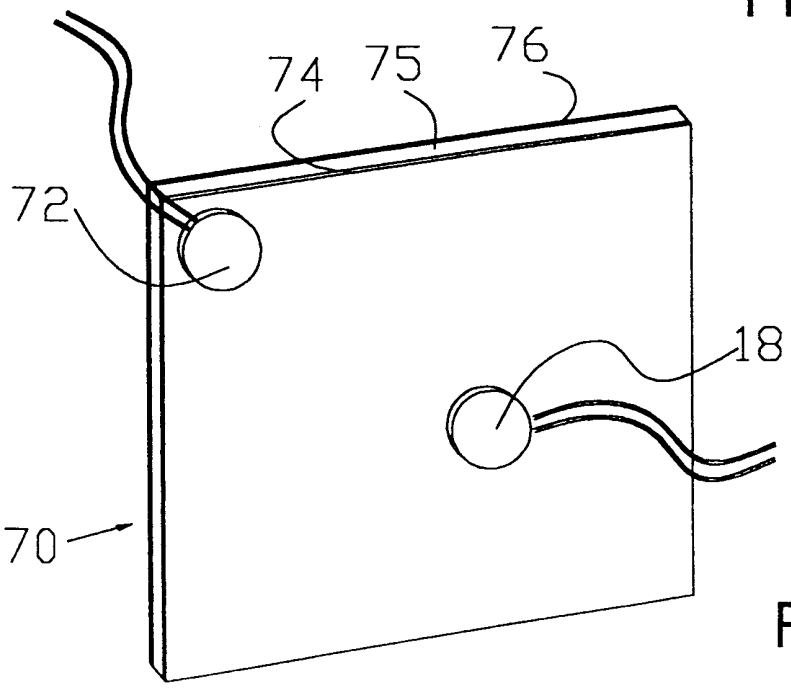
74
75
76
72
18
70

FIG.8

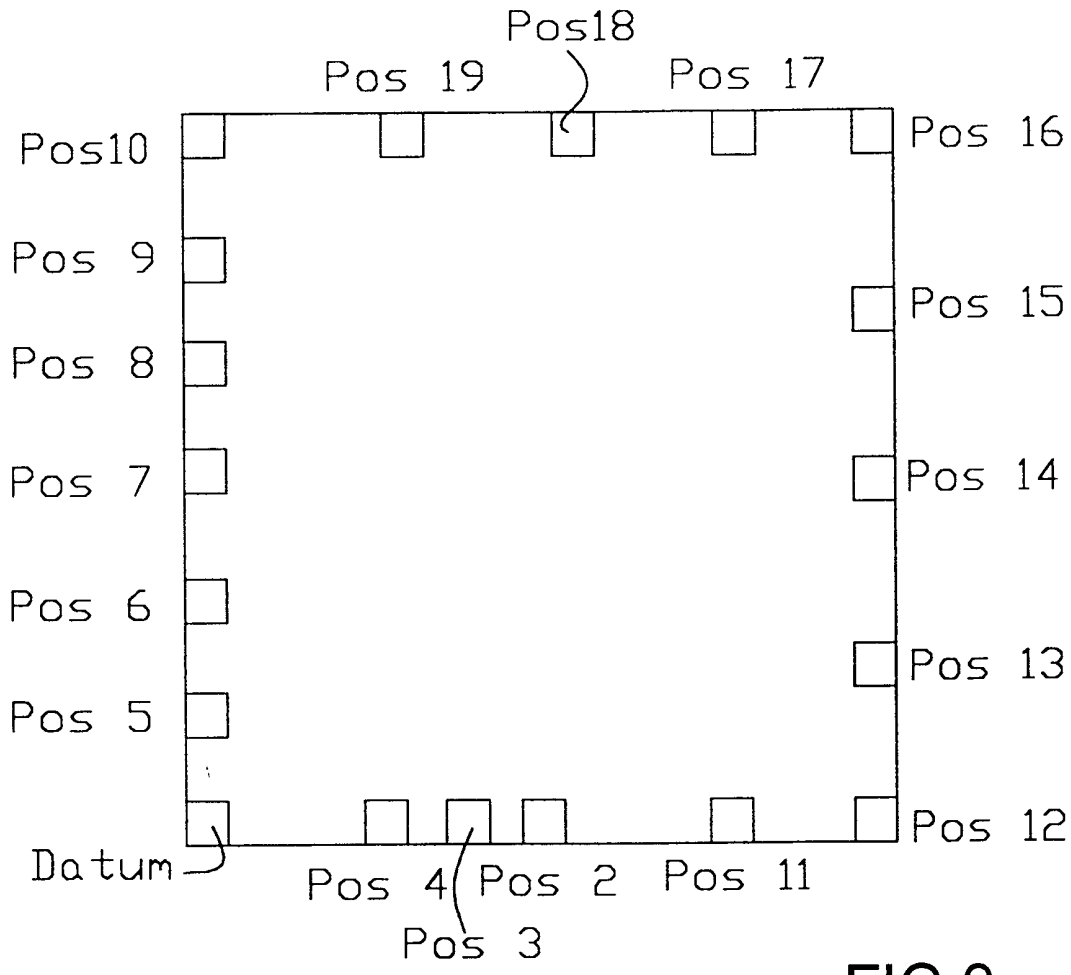
Pos18
Pos 19
Pos 17
Pos10
Pos 16
Pos 9
Pos 15
Pos 8
Pos 7
Pos 14
Pos 6
Pos 13
Pos 5
Pos 12
Datum
Pos 4
Pos 2
Pos 11
Pos 3

FIG.9

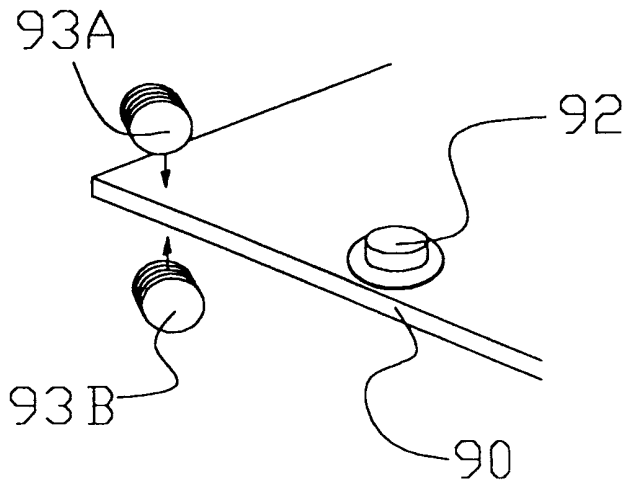
93A
92
93B
90

FIG.9A

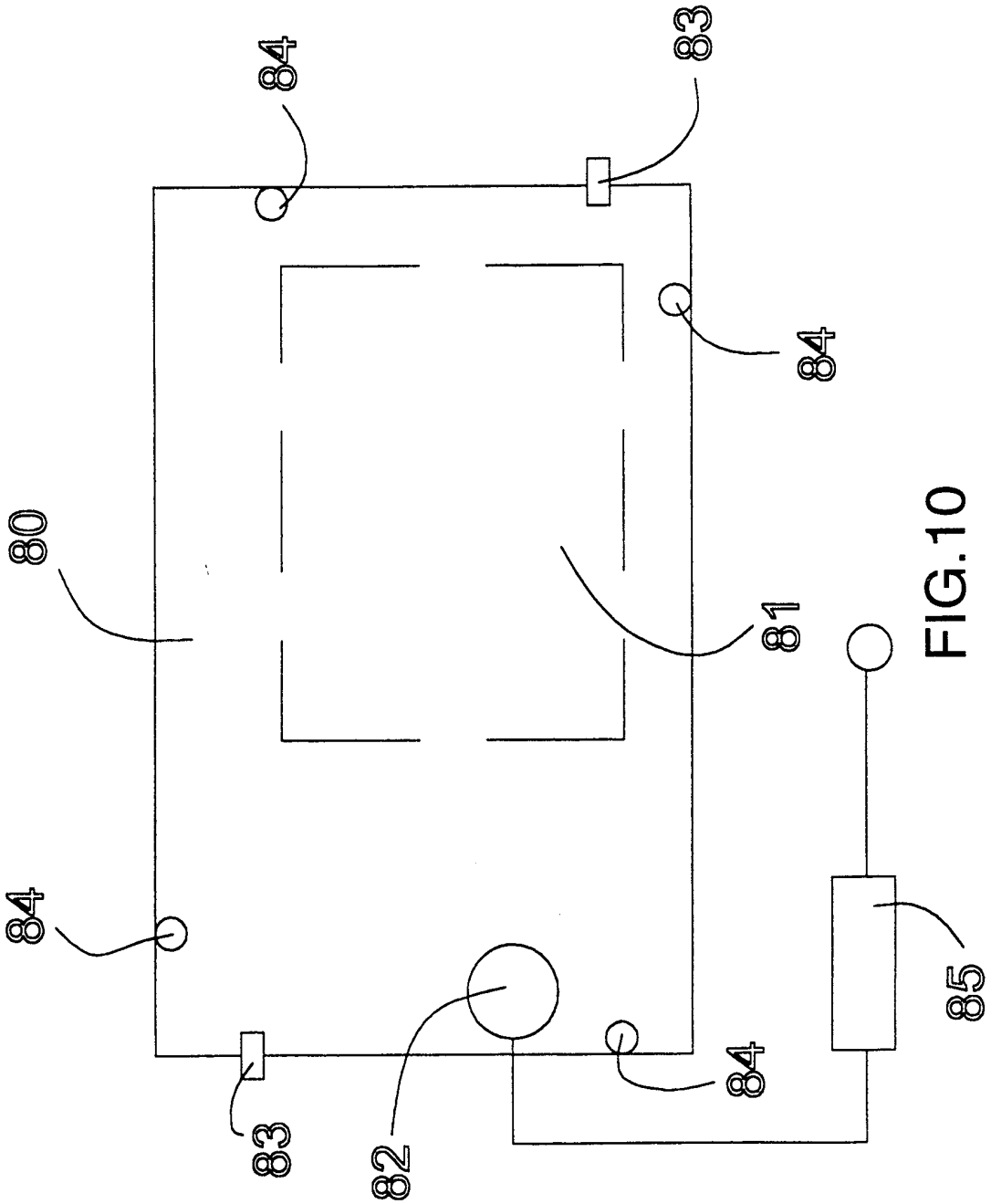


FIG.10

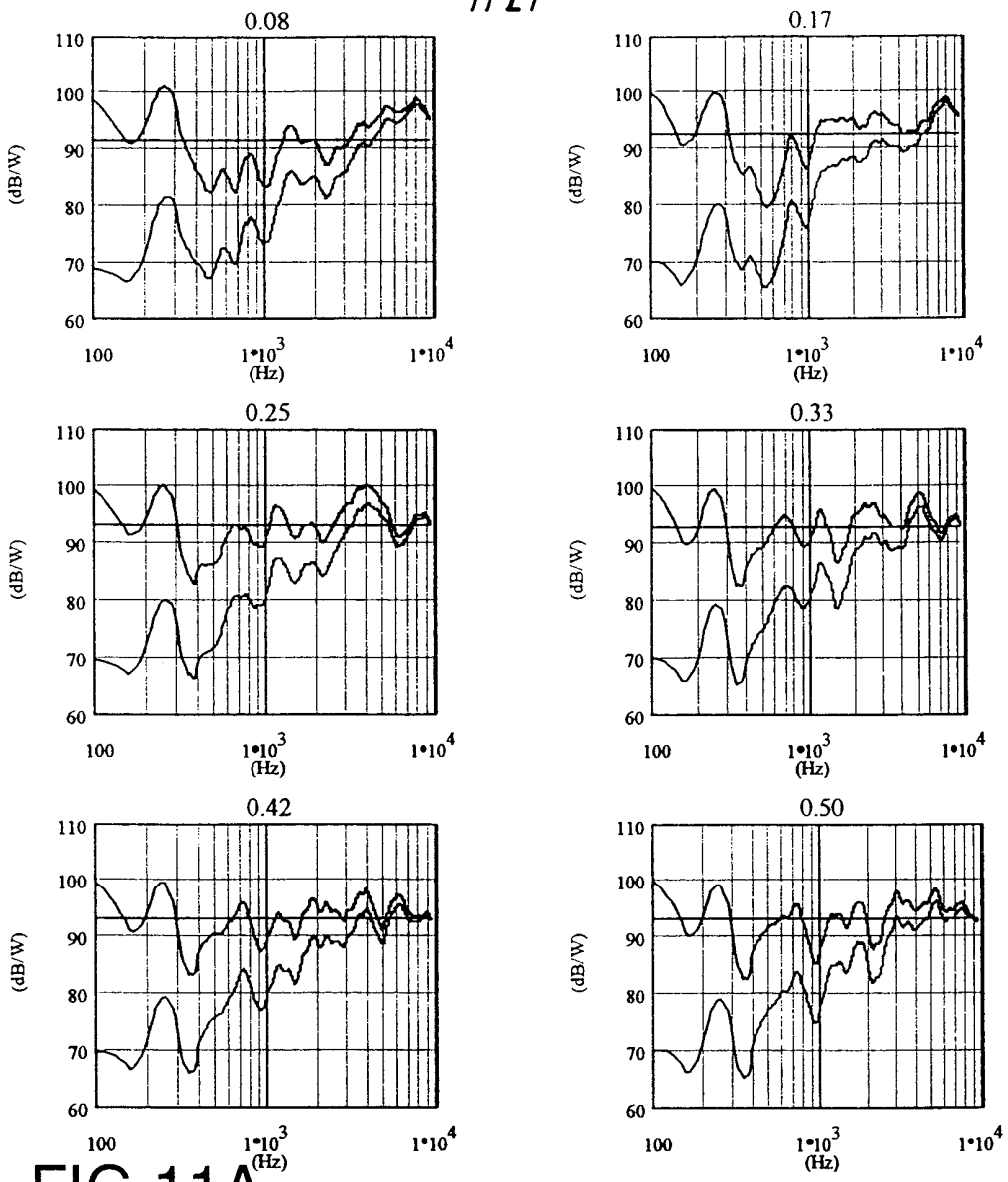


FIG.11A

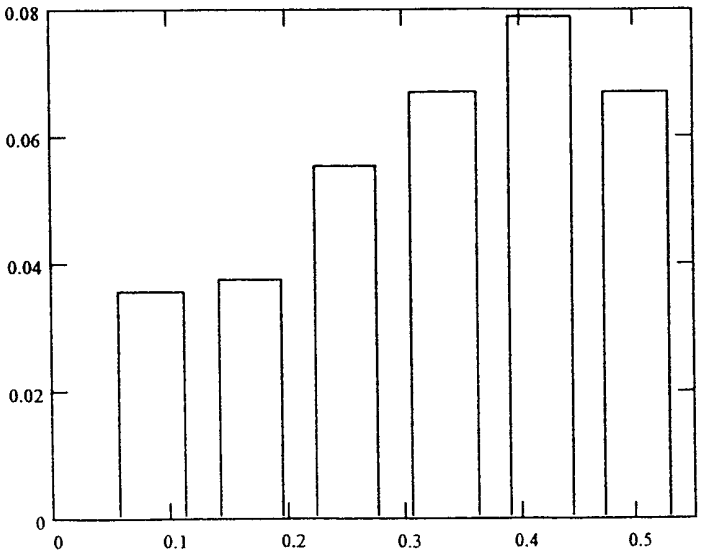


FIG.12A

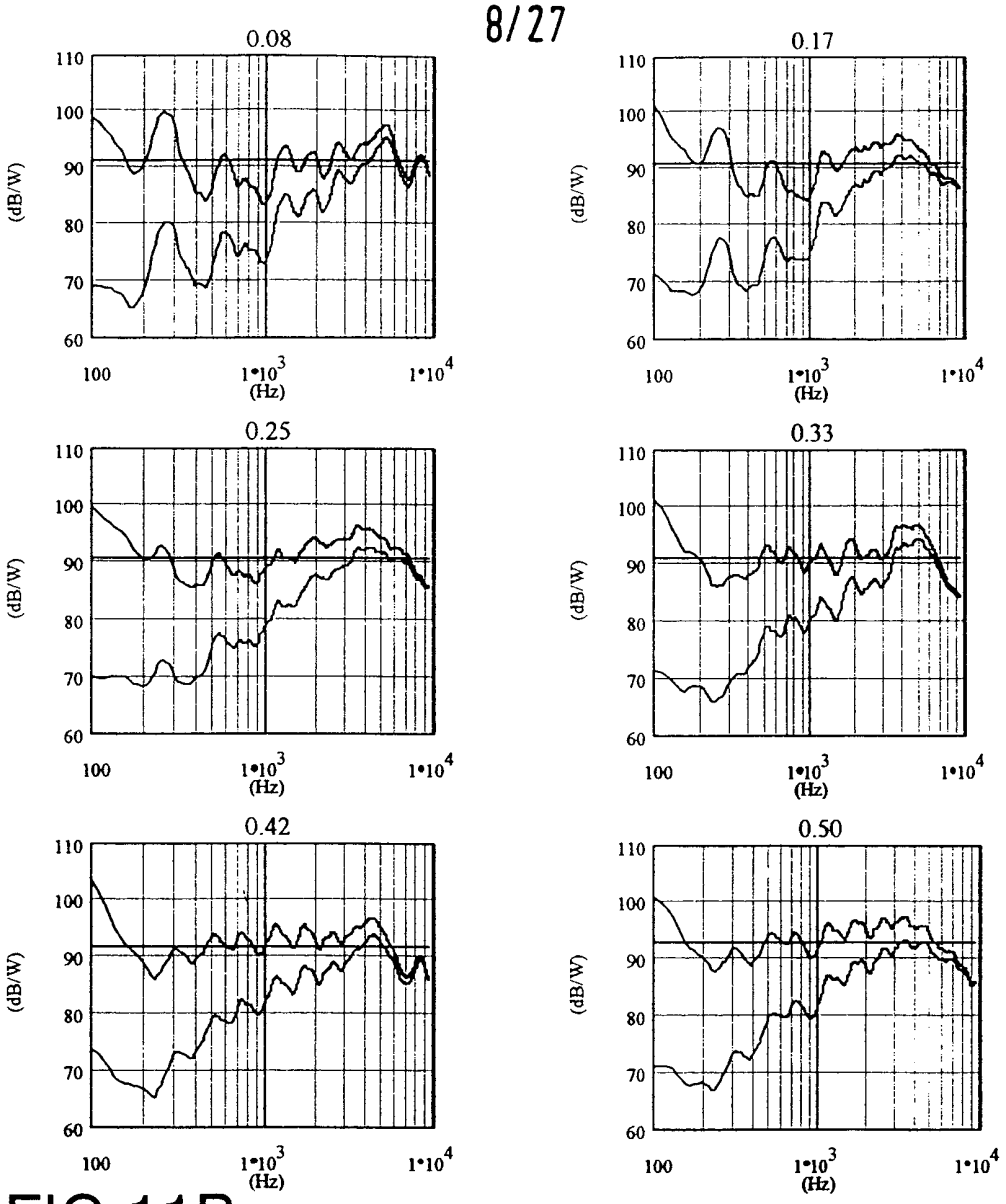


FIG.11B

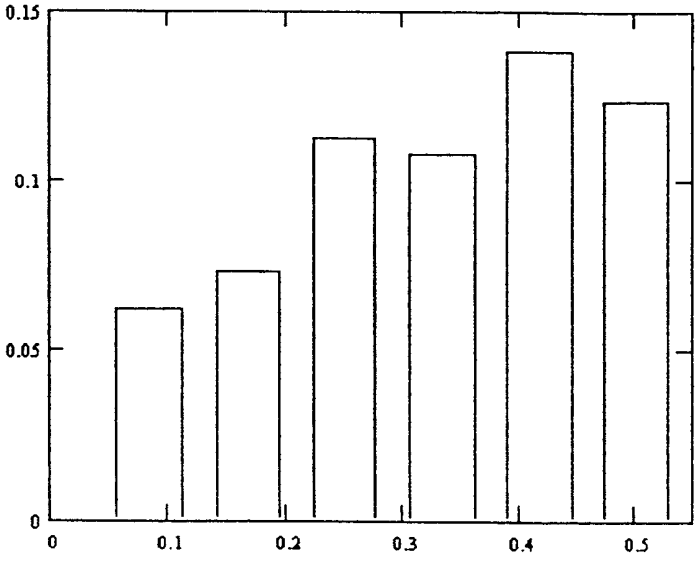


FIG.12B

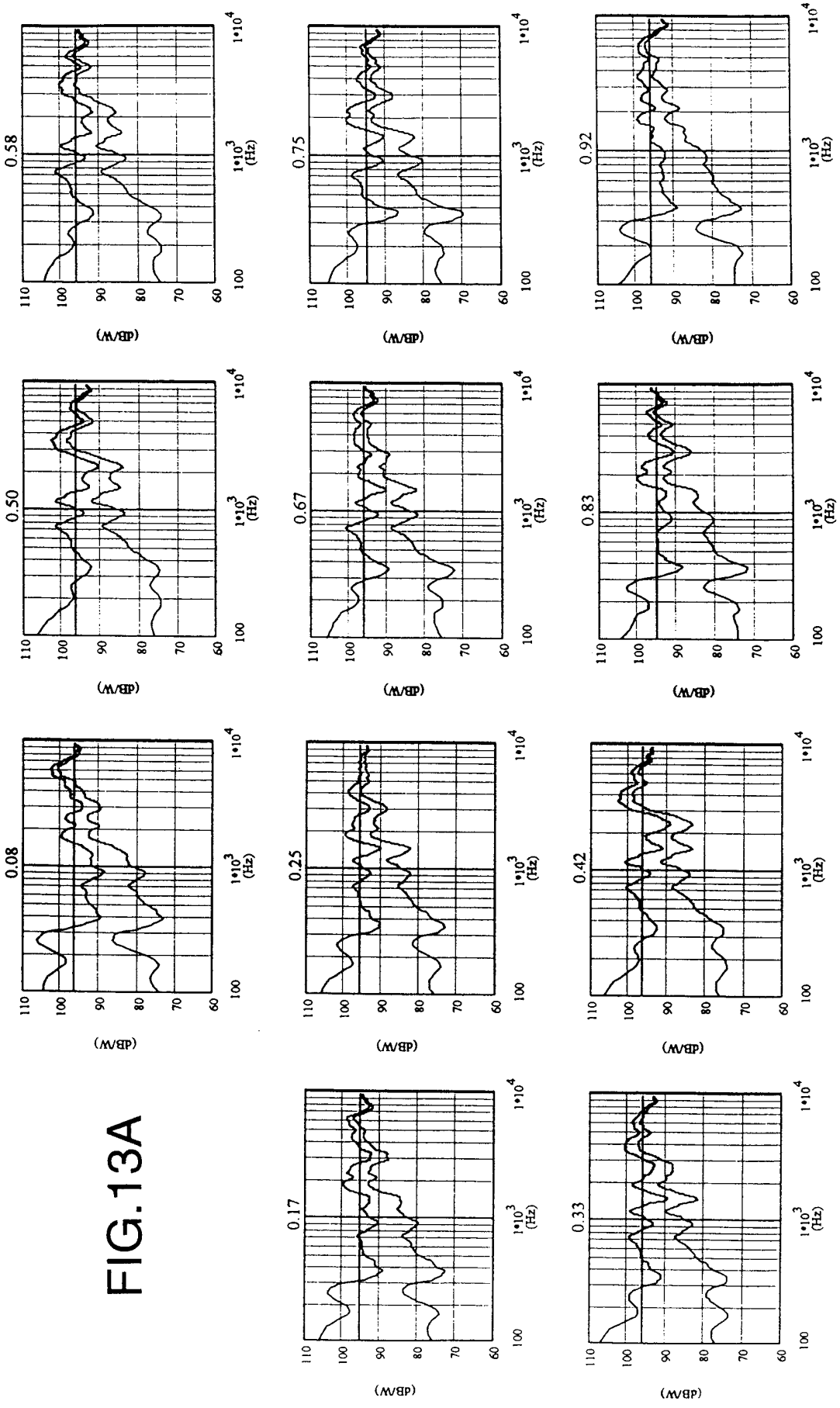
0.58
0.75
0.92
0.50
0.67
0.83
0.08
0.25
0.42
0.17
0.33
110
100
90
80
70
60
100
1•10³ (Hz)
1•10⁴
(dB/W)

FIG.13A

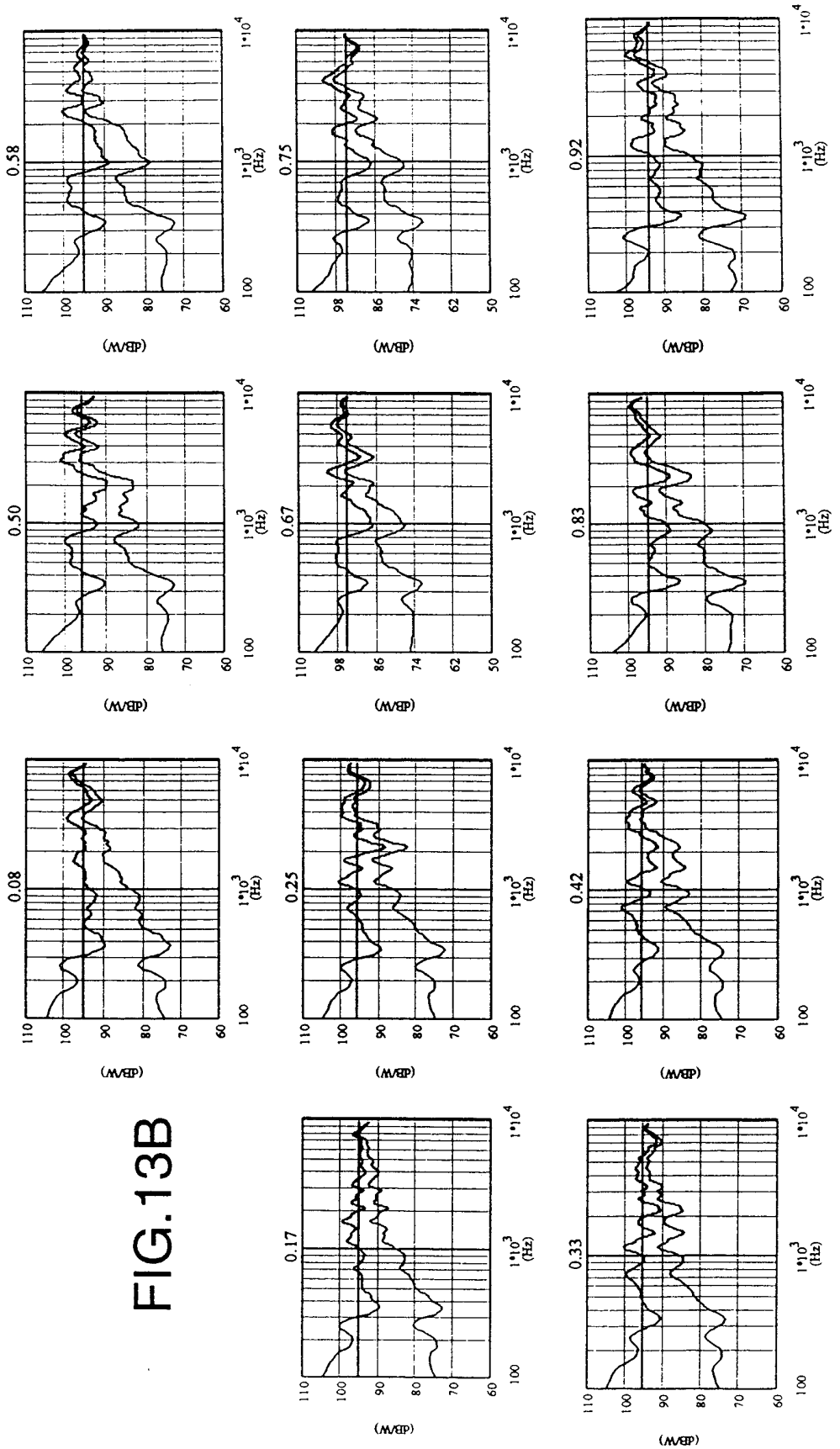


FIG.13B

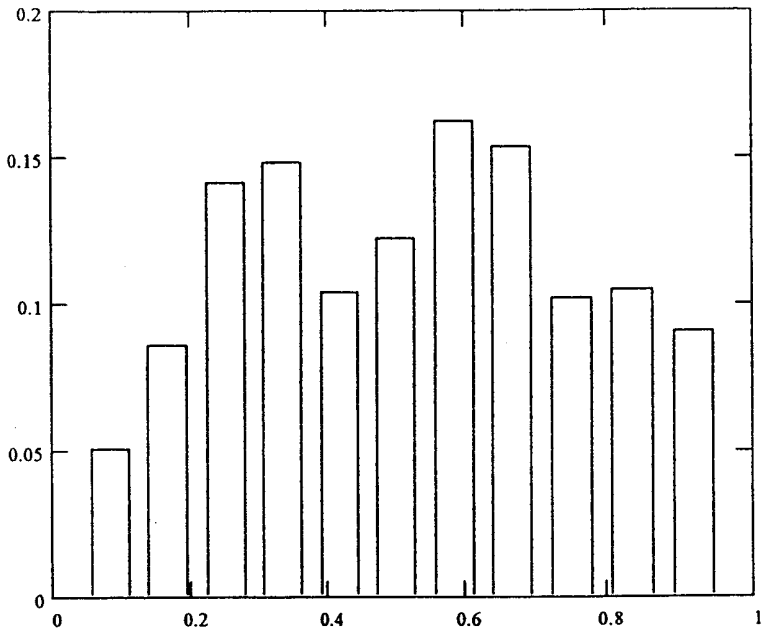


FIG.14A

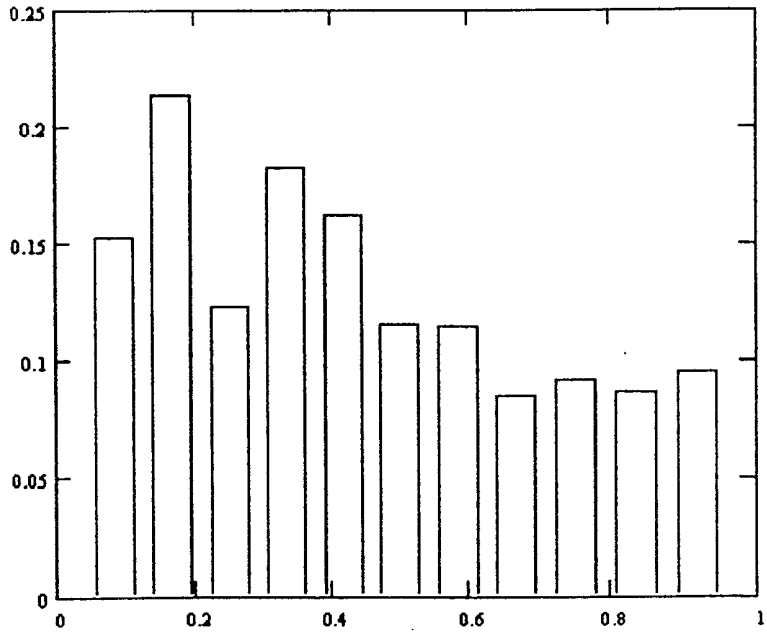


FIG.14B

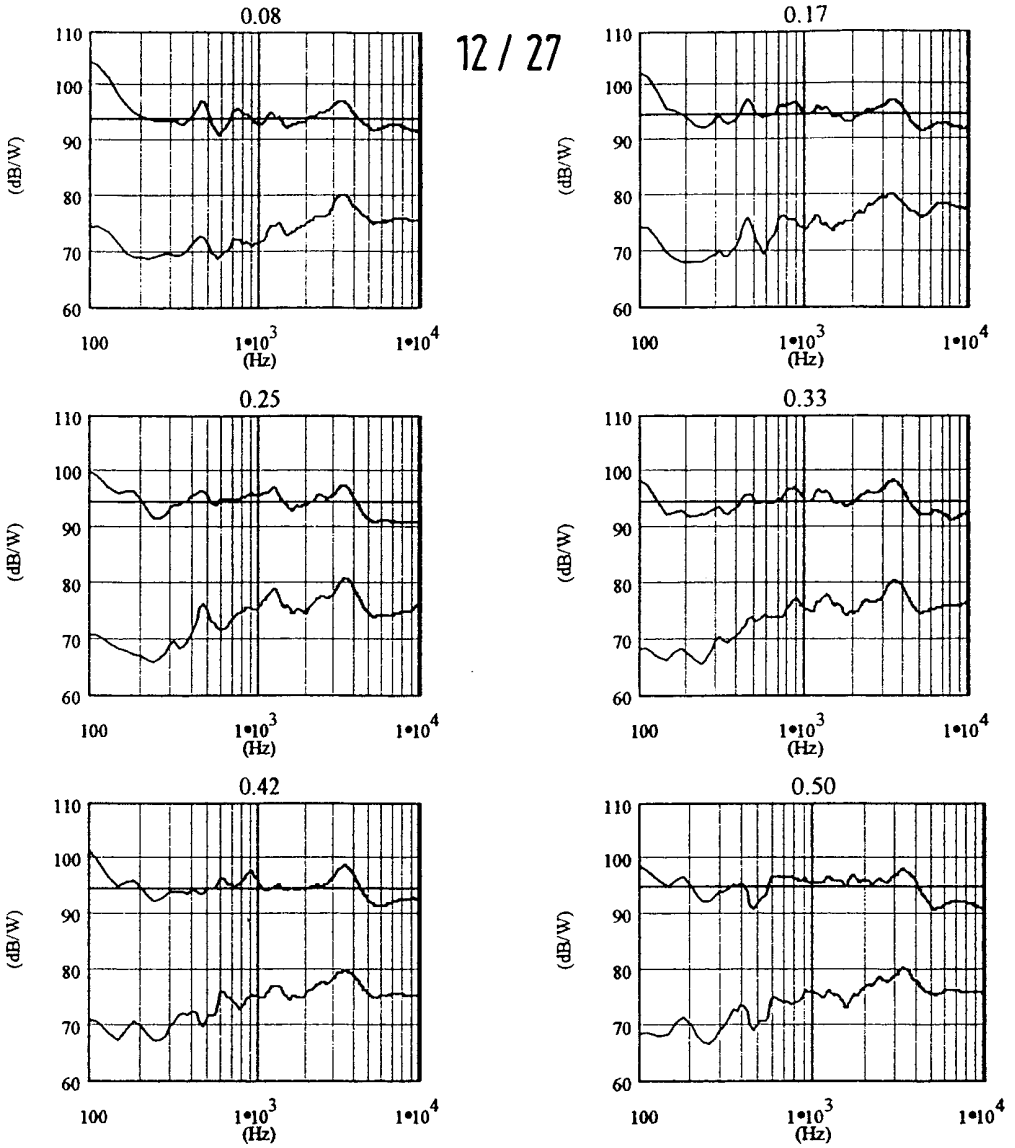


FIG.15A

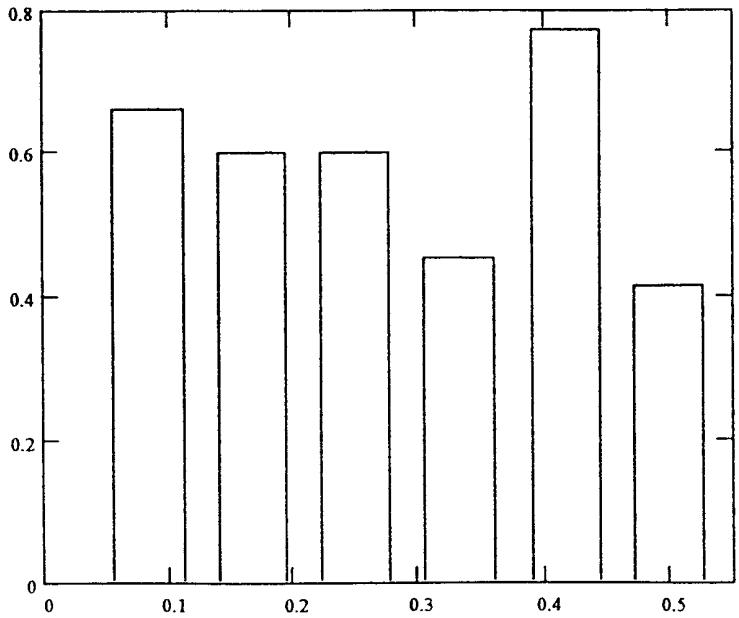


FIG.15B

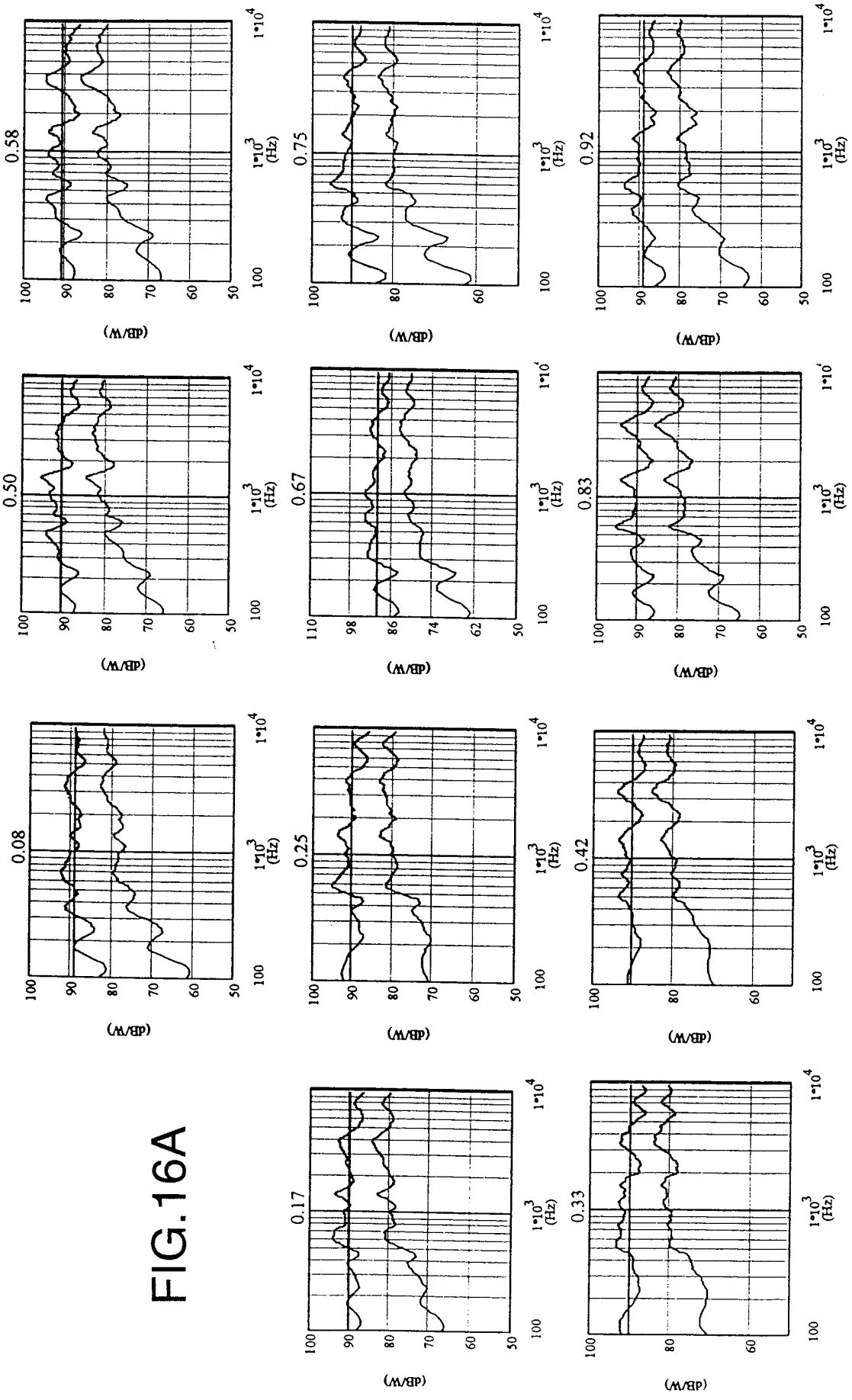


FIG.16A

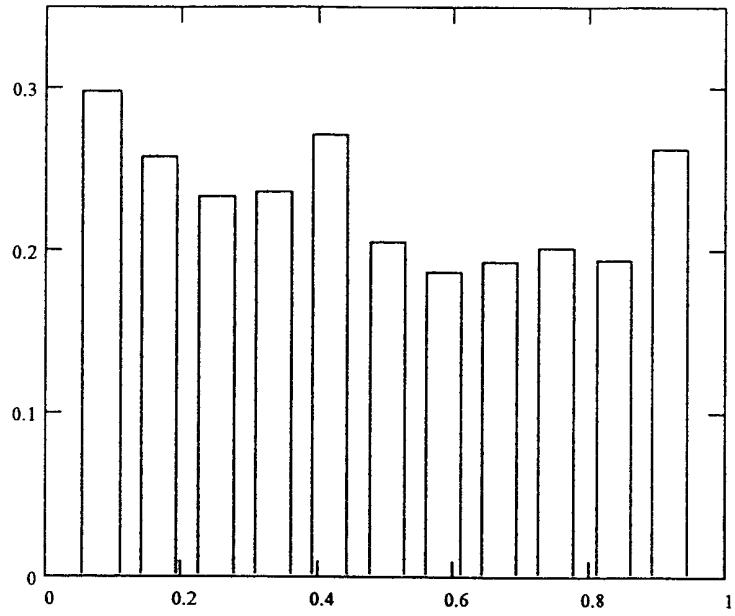


FIG.16B

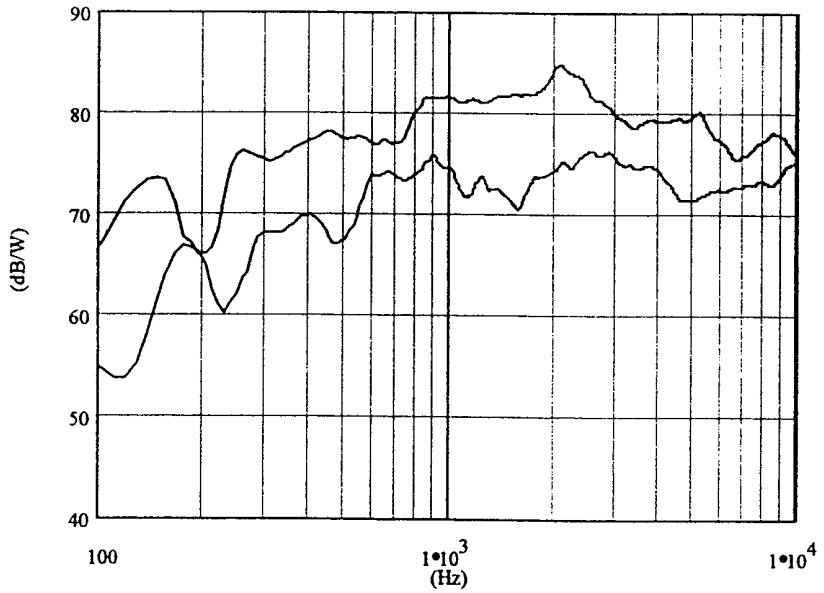


FIG.17

FIG.18A

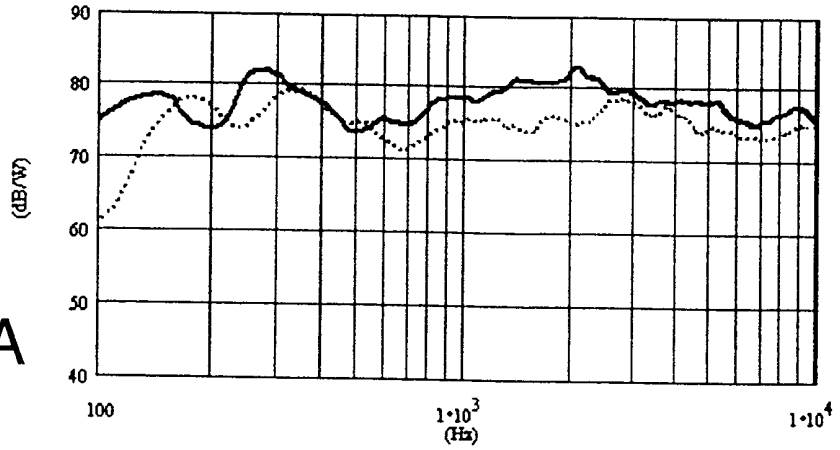


FIG.18B

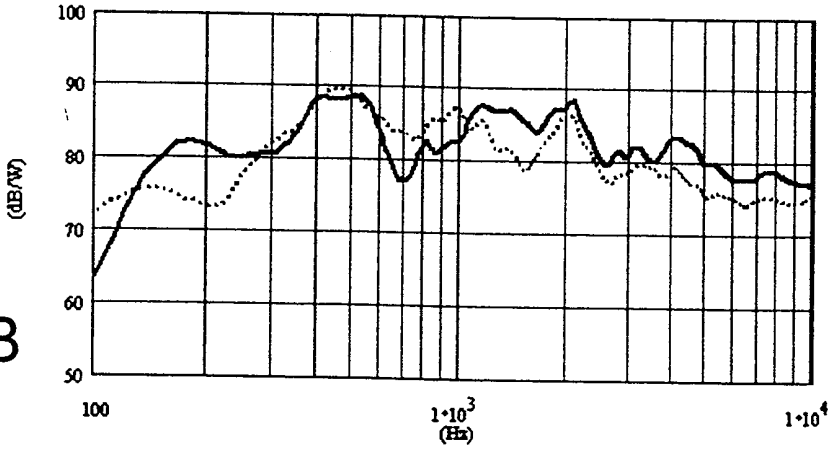


FIG.18C

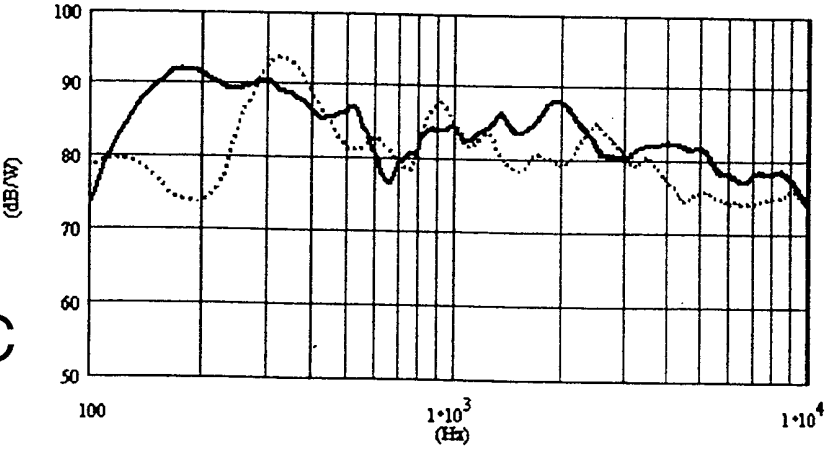

MISSING AT THE TIME OF PUBLICATION

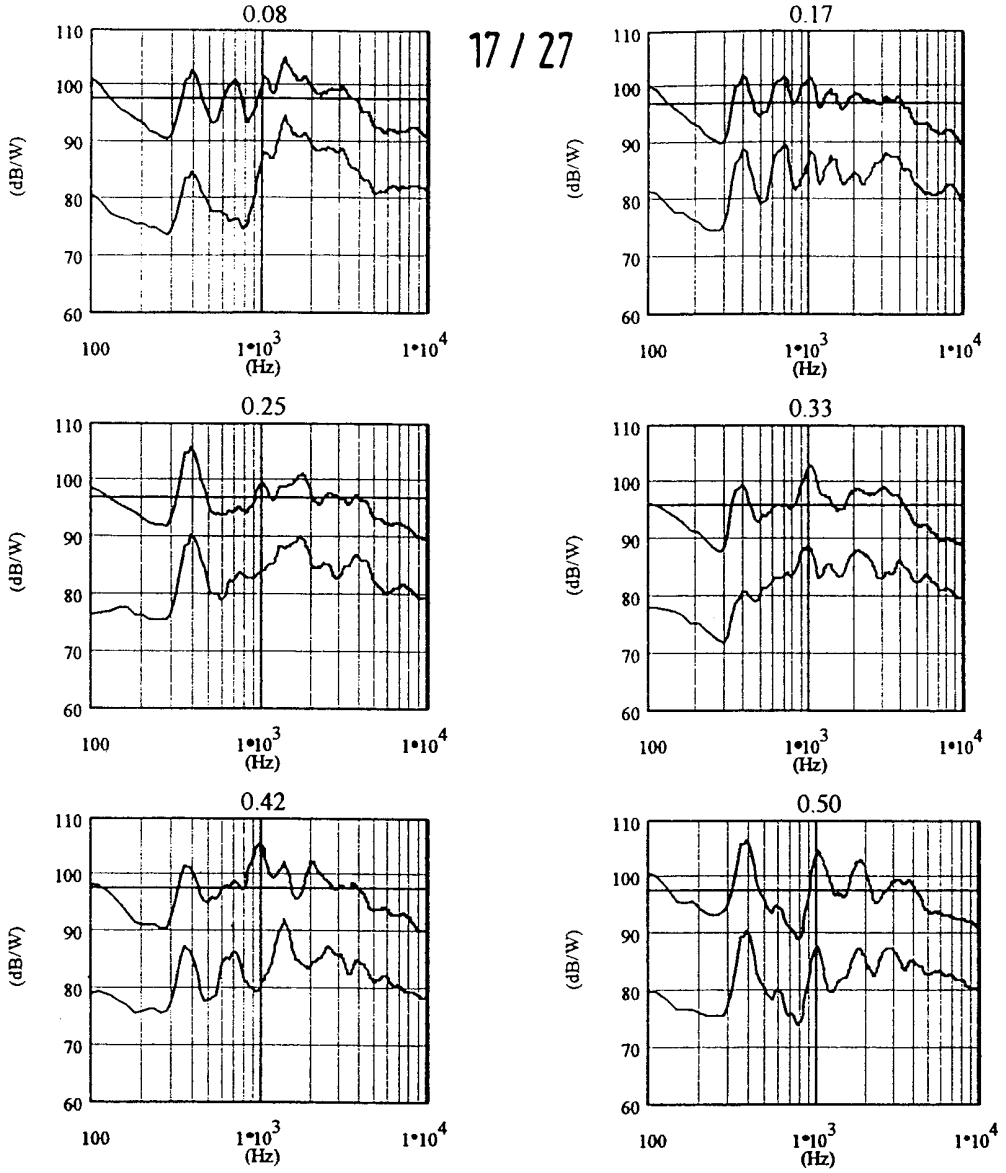


FIG.20A

FIG.20B

200Hz-4kHz

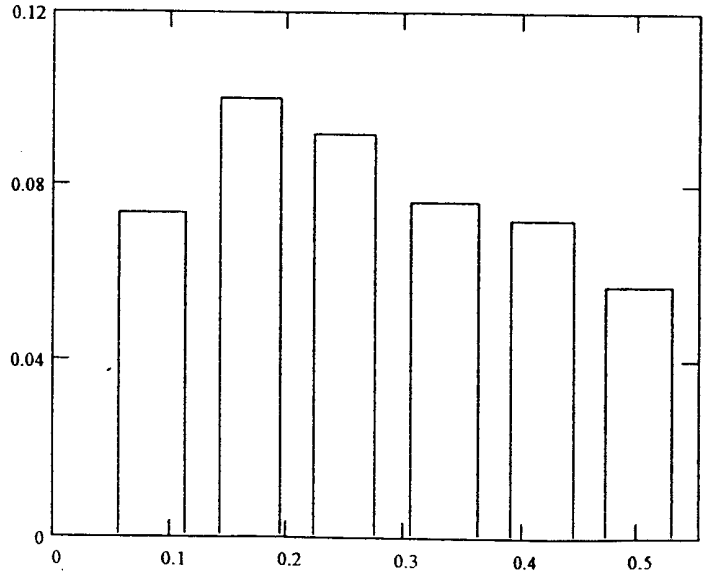

FIG.21A

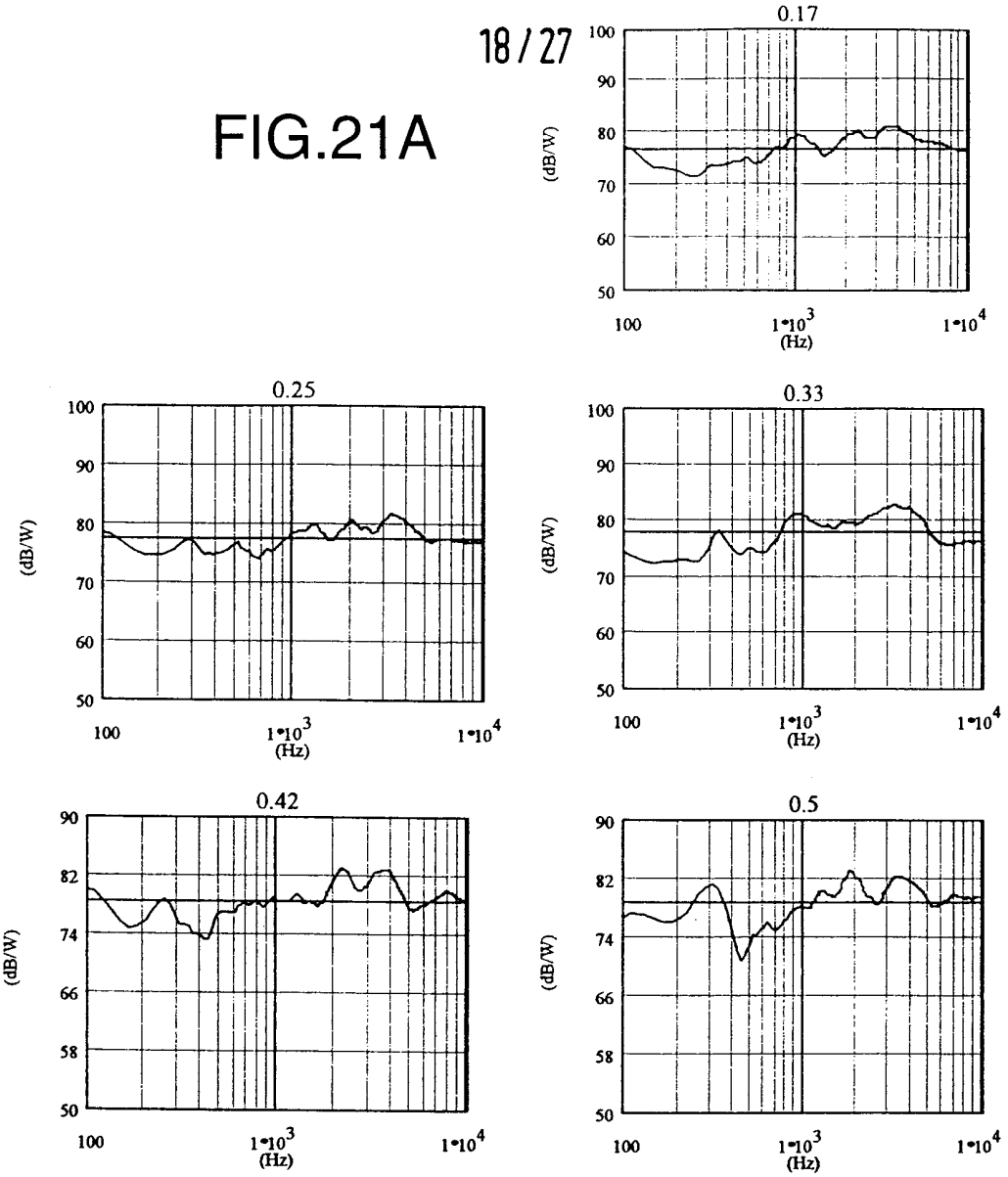


FIG.21B

200Hz-10kHz

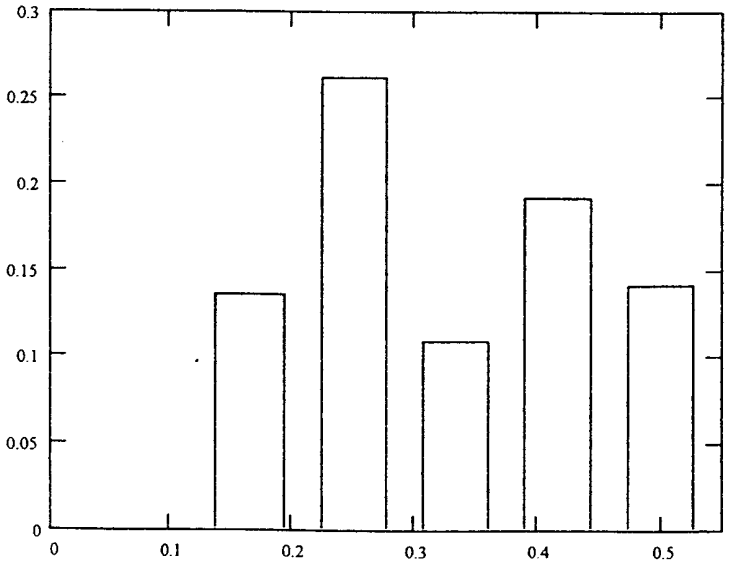

MISSING AT THE TIME OF PUBLICATION

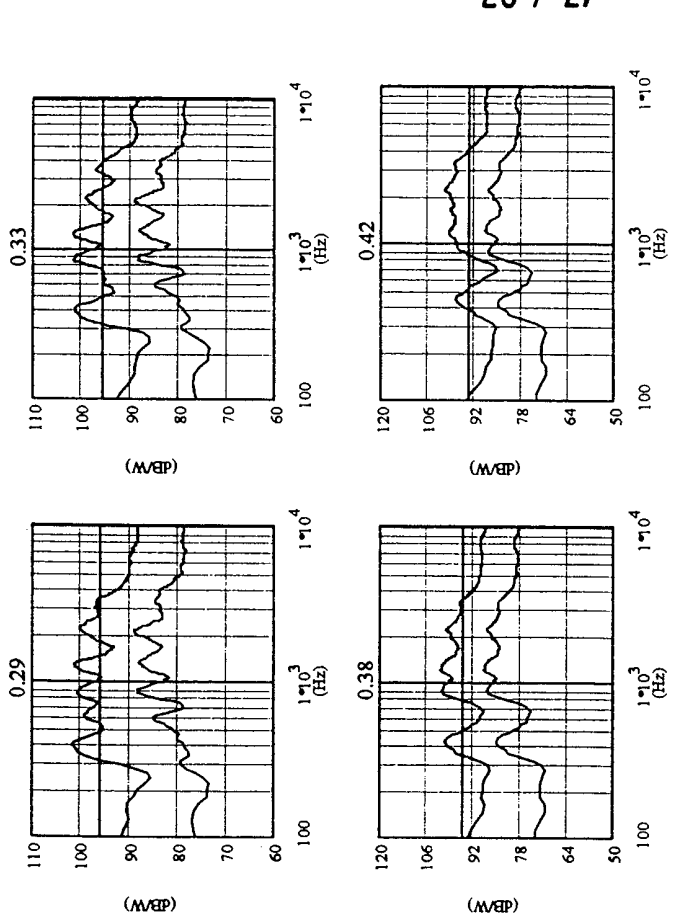


FIG.24B

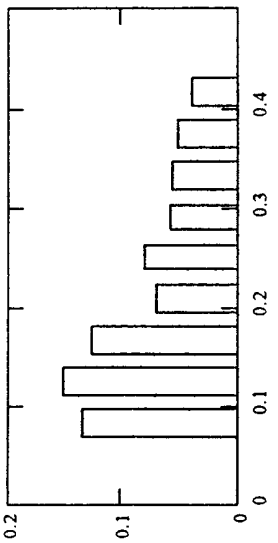


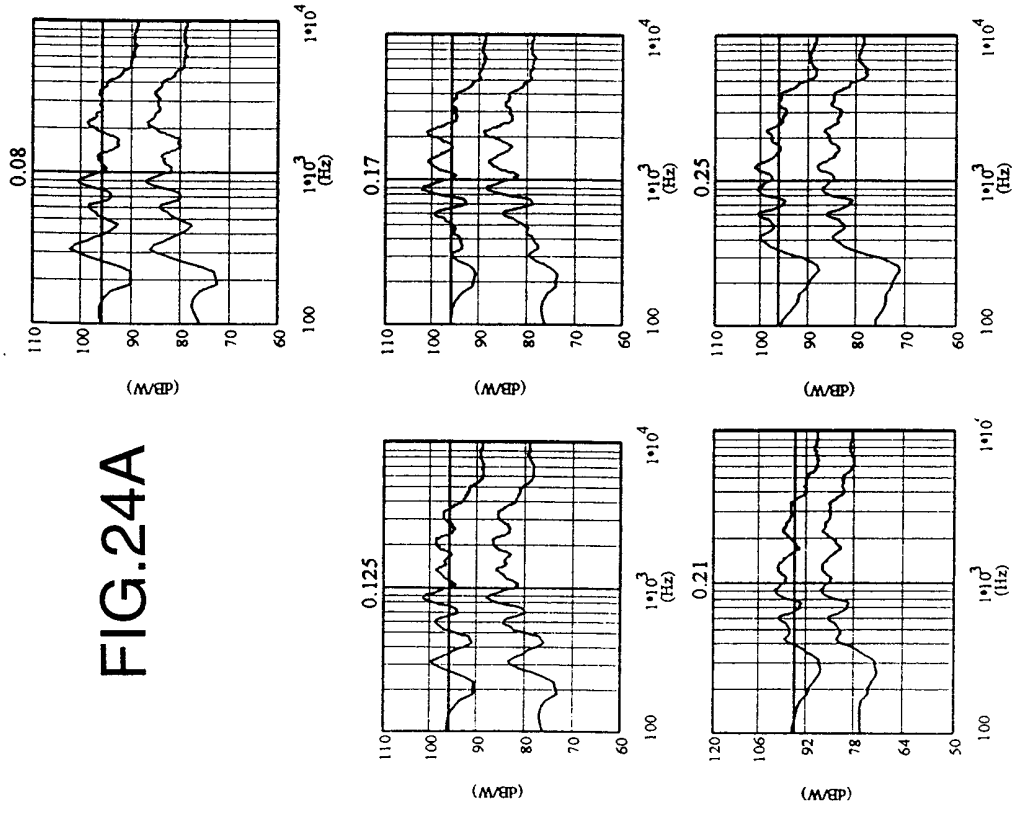


FIG.24A

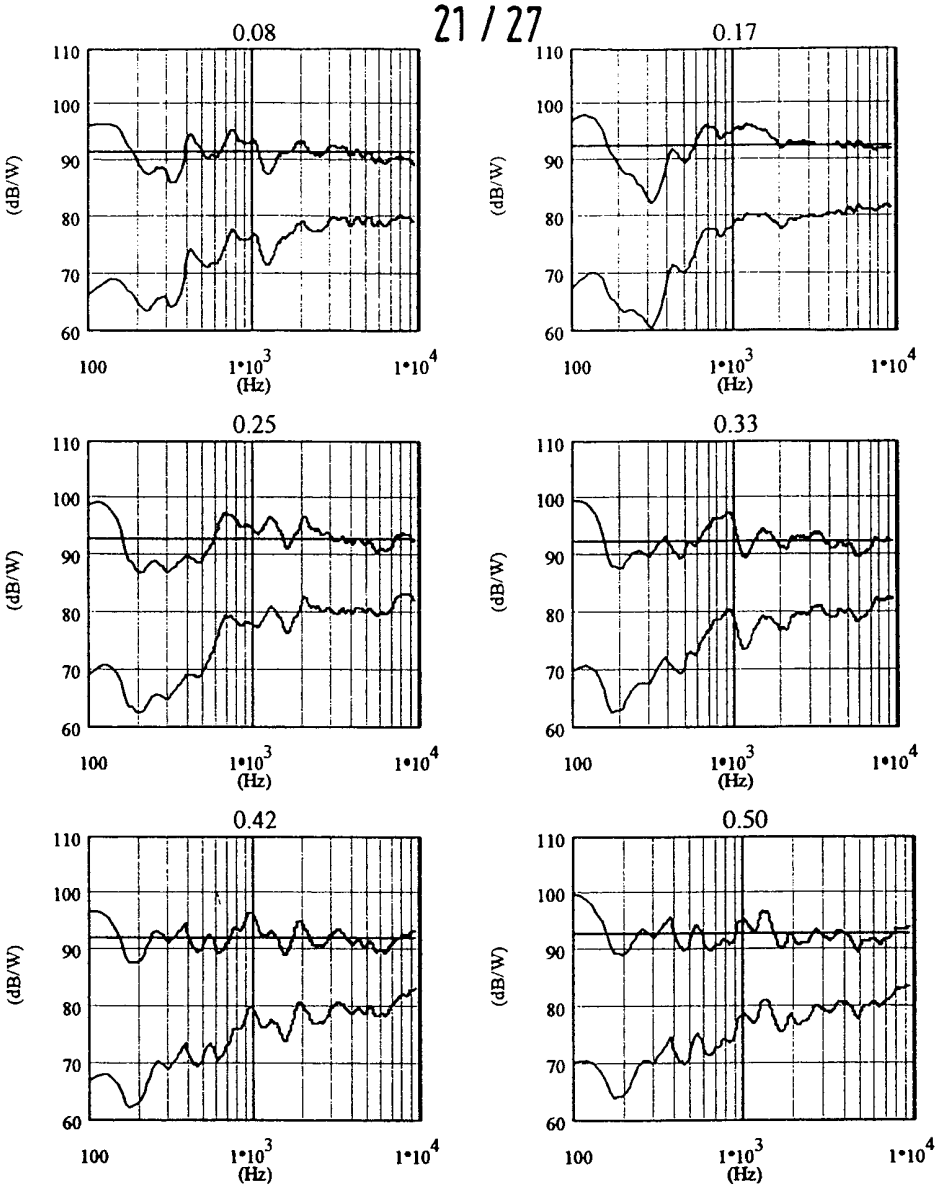


FIG.25A

FIG.25B

200Hz-10kHz

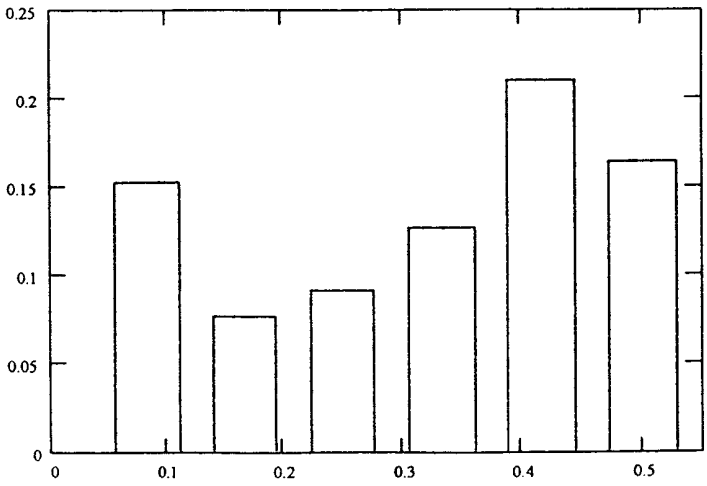

FIG.26A

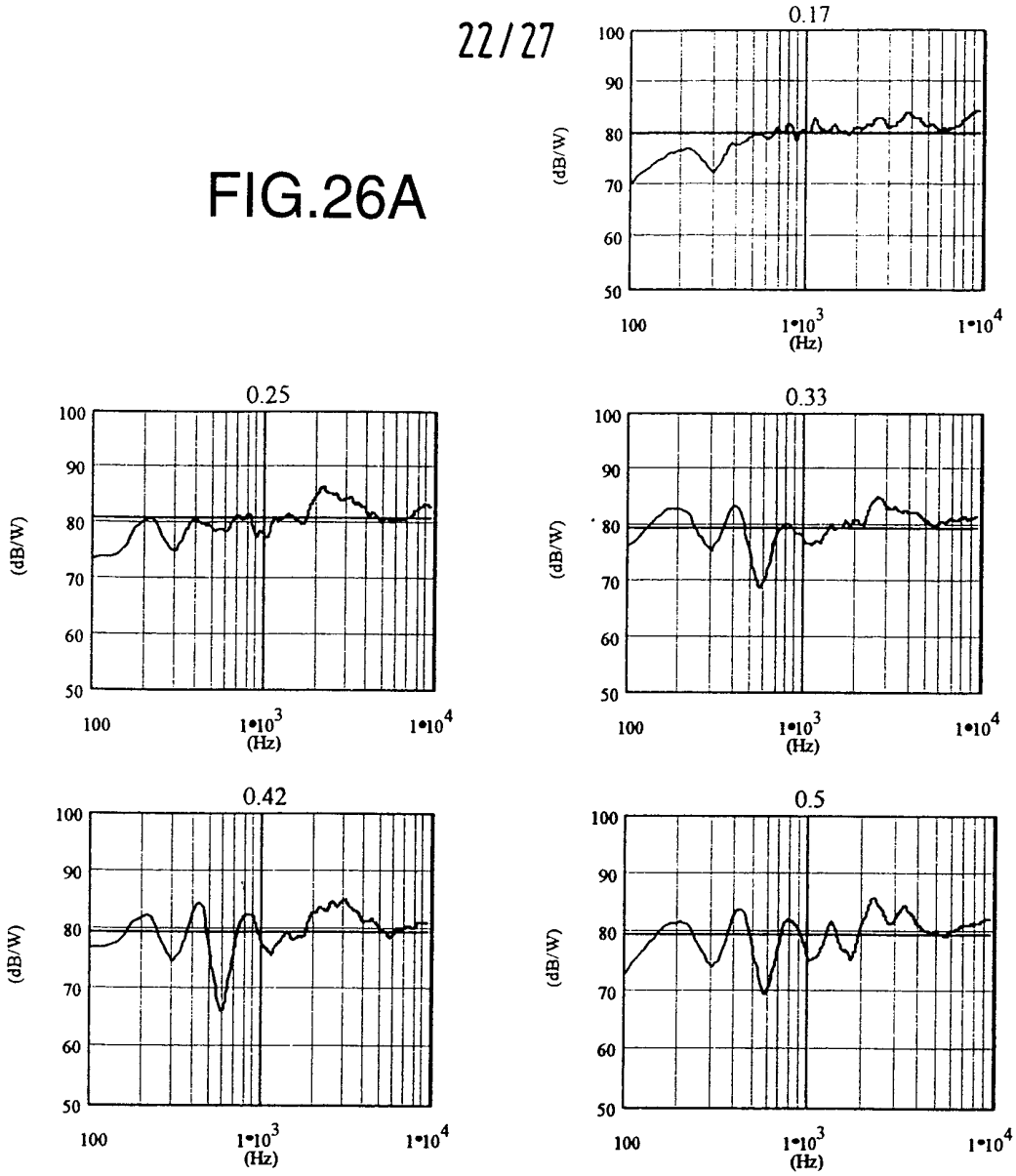


FIG.26B

200Hz-10kHz

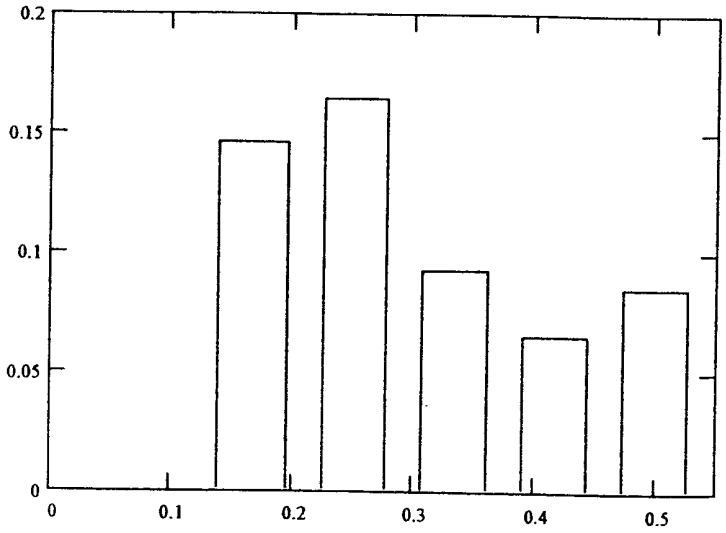

FIG.27A

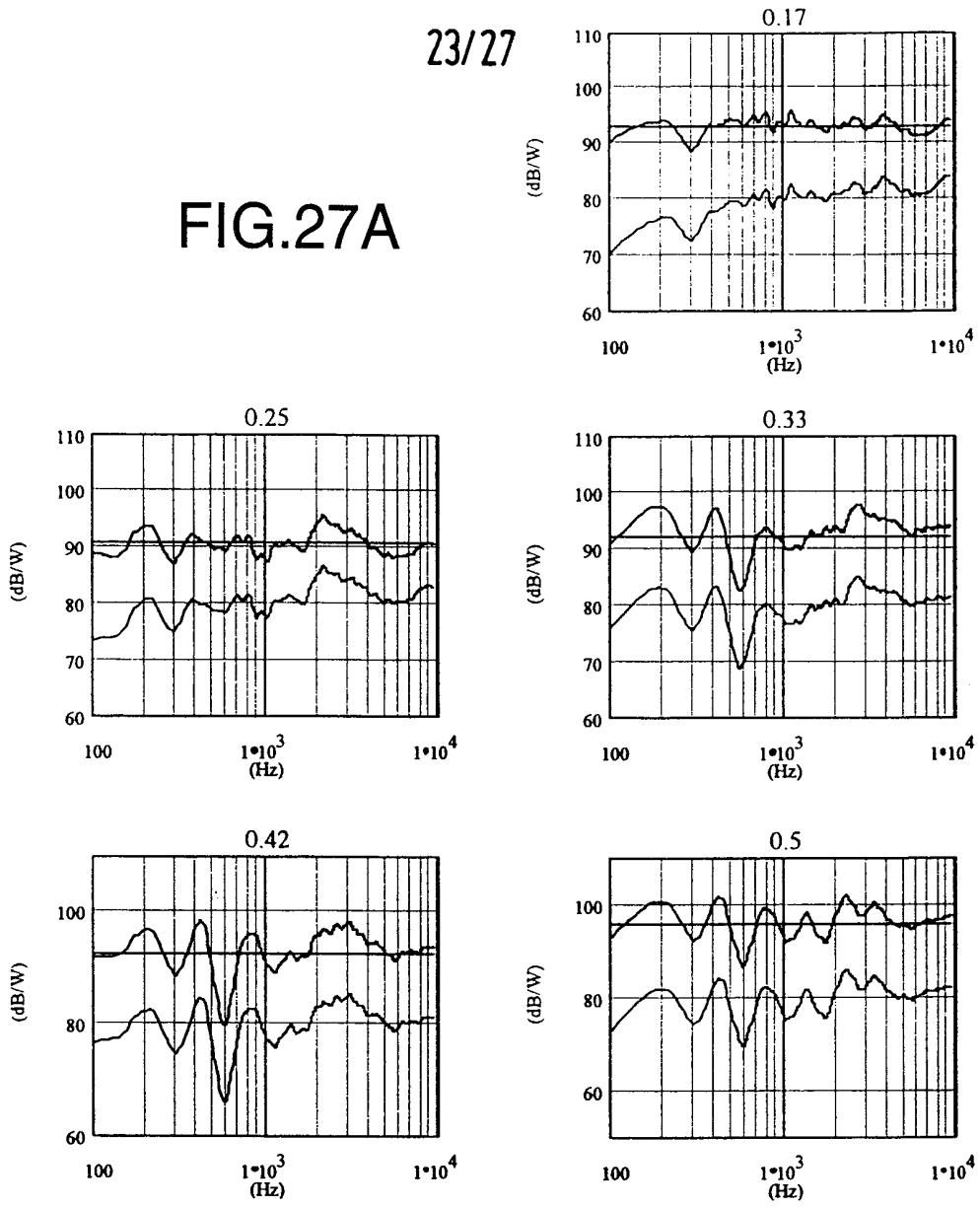


FIG.27B

200Hz-10kHz

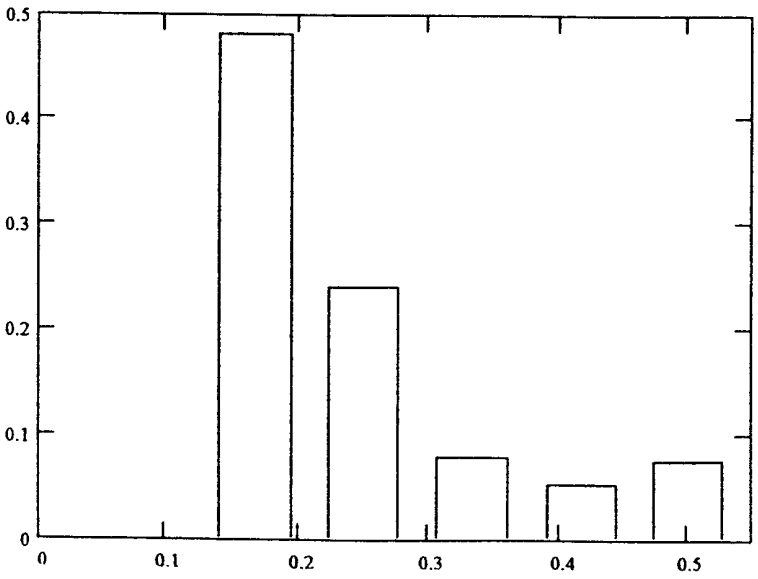

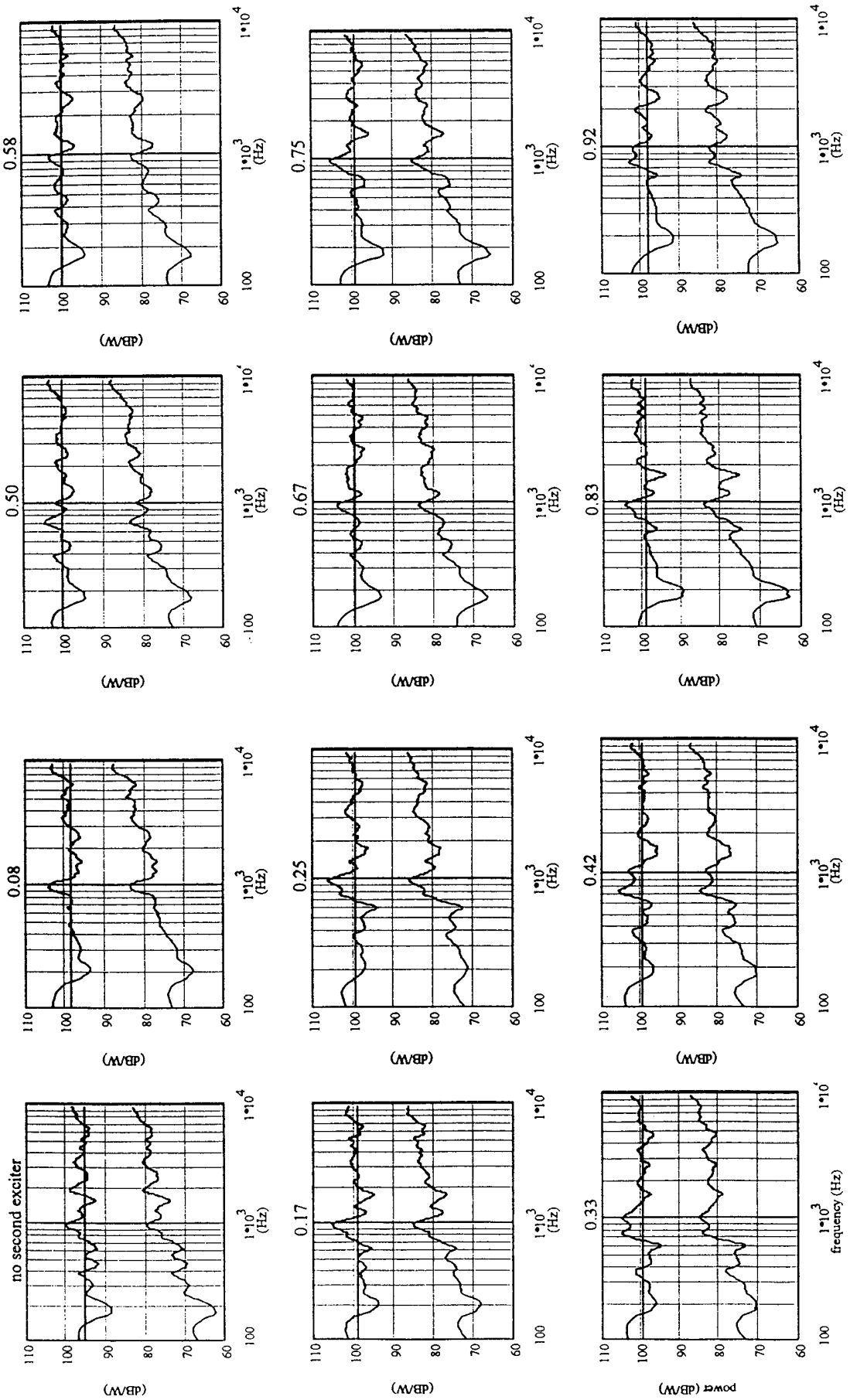
0.58
0.75
0.92
0.50
0.67
0.83
0.08
0.25
0.42
no second exciter
0.17
0.33
power (dB/W)
frequency (Hz)

FIG.28A

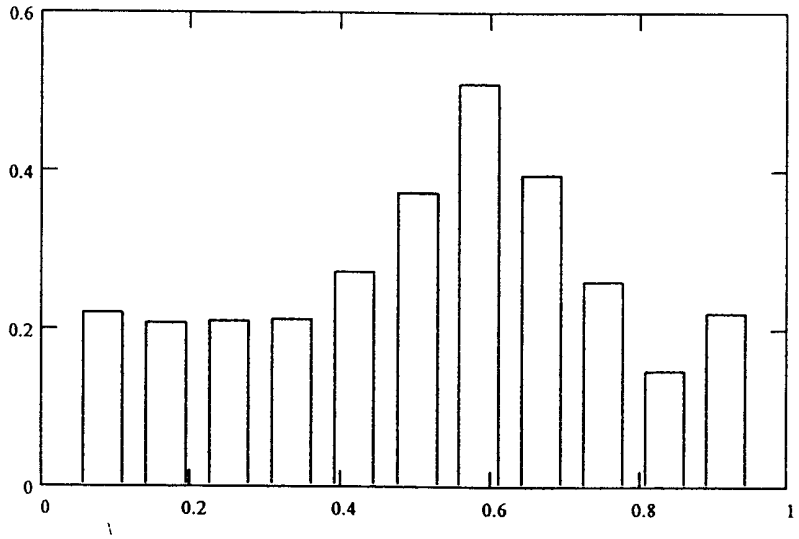


FIG.28B 200Hz-10kHz

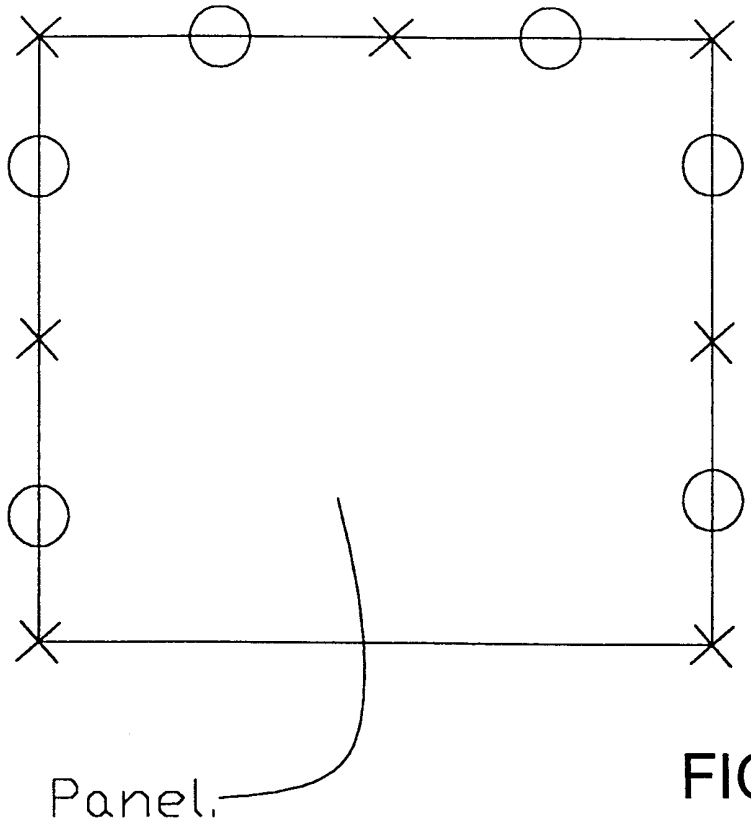


FIG.29

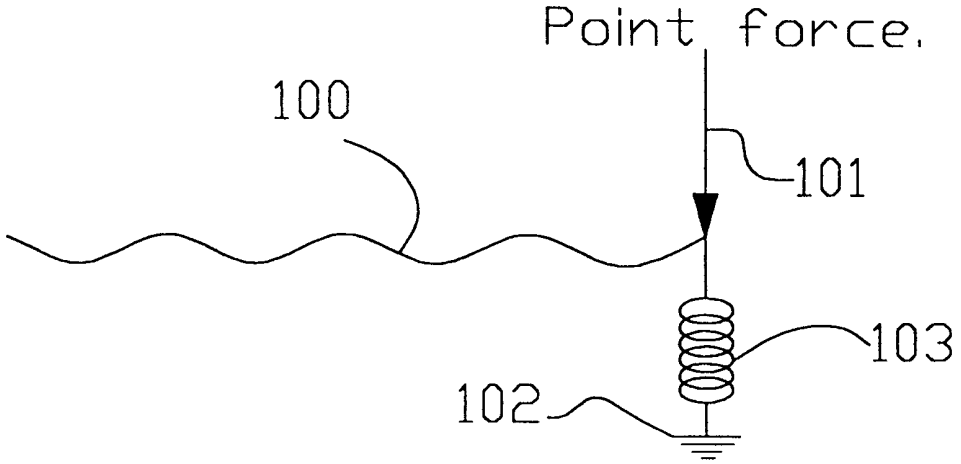


FIG.30

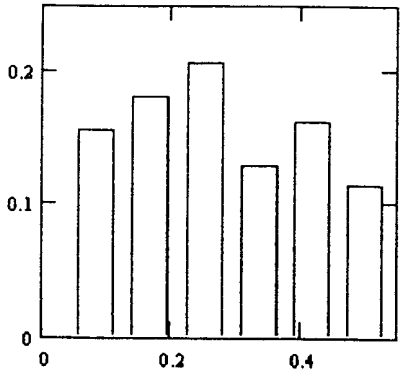


FIG.31A
300Hz-3kHz

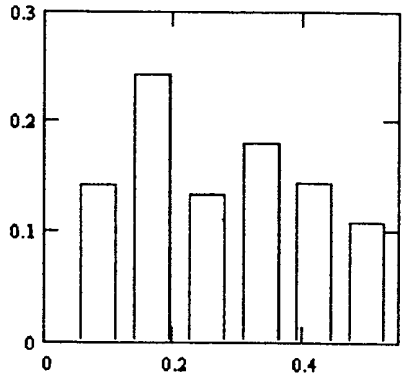


FIG.31C
300Hz-3kHz

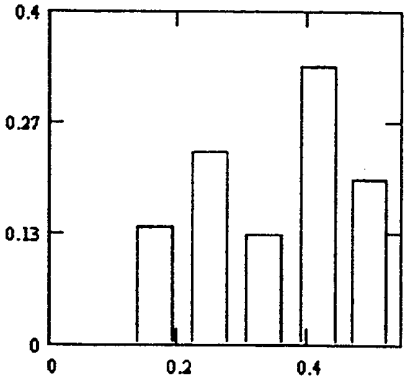


FIG.31E
300Hz-3kHz

FIG.31B
300Hz-3kHz

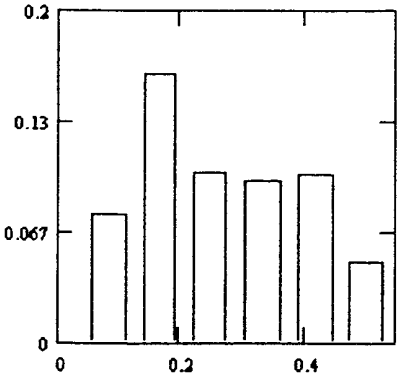


FIG.31D
300Hz-3kHz

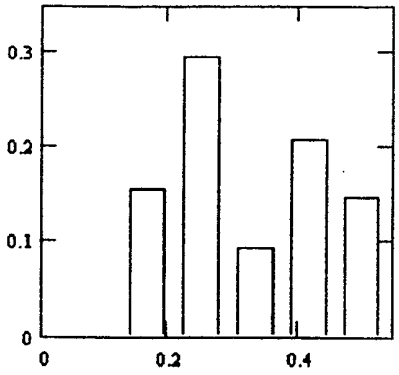

DRAWINGS ANNEX B



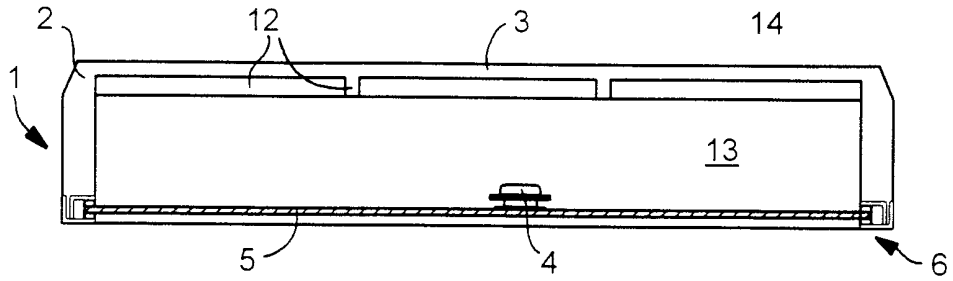


FIG. 1

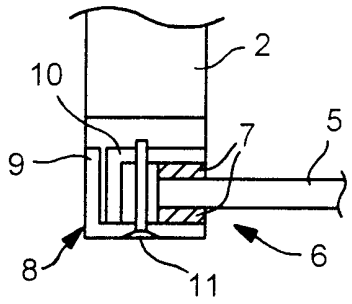


FIG. 2

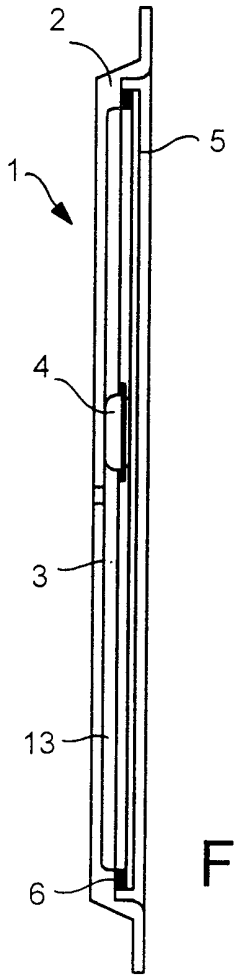


FIG. 3

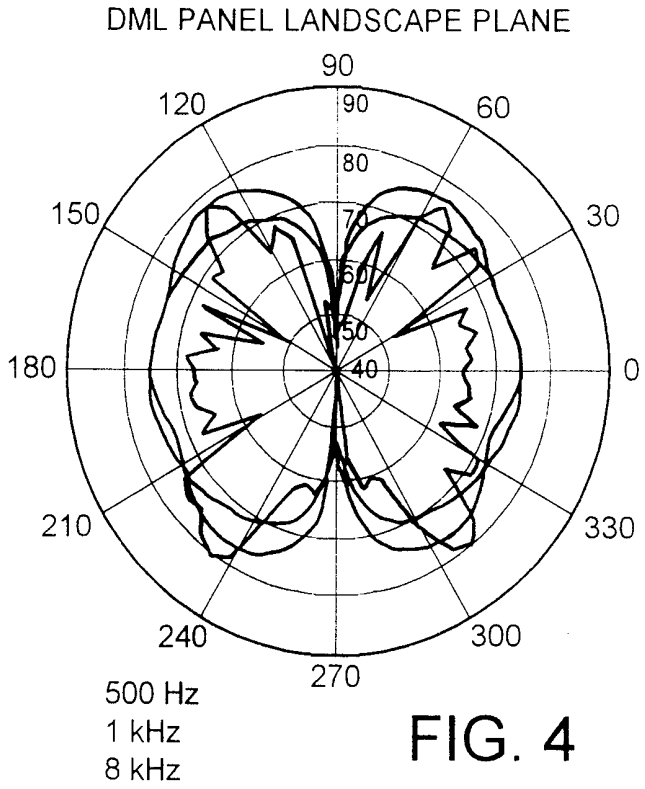
DML PANEL LANDSCAPE PLANE
90
120
60
150
30
180
0
210
330
240
300
270
90
80
70
60
50
40
500 Hz
1 kHz
8 kHz

FIG. 4

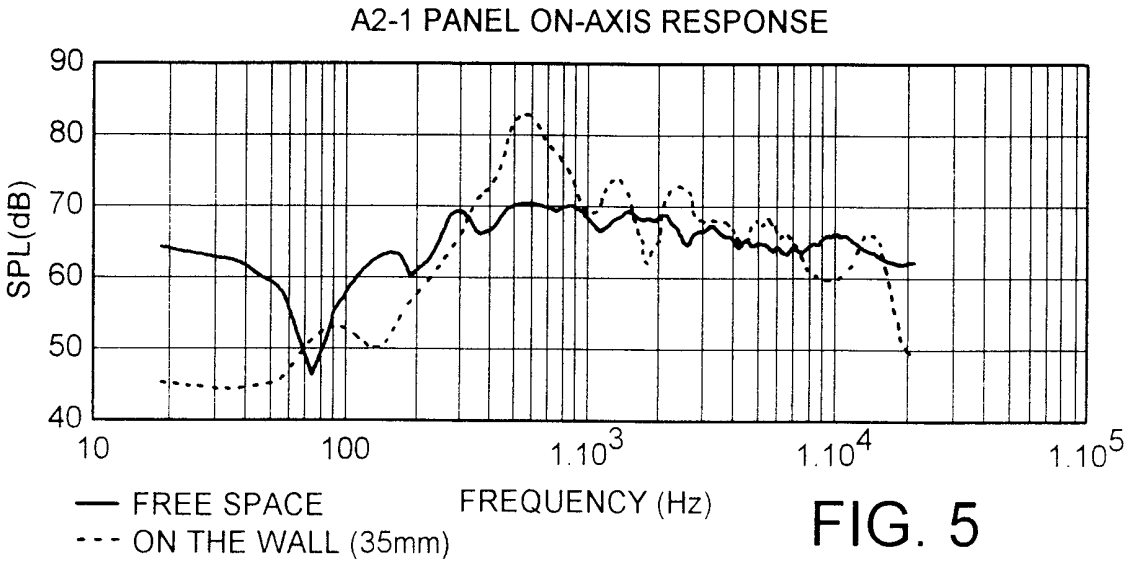
A2-1 PANEL ON-AXIS RESPONSE
SPL(dB)
90
80
70
60
50
40
10
100
1.10^3
1.10^4
1.10^5
FREQUENCY (Hz)
— FREE SPACE
--- ON THE WALL (35mm)

FIG. 5

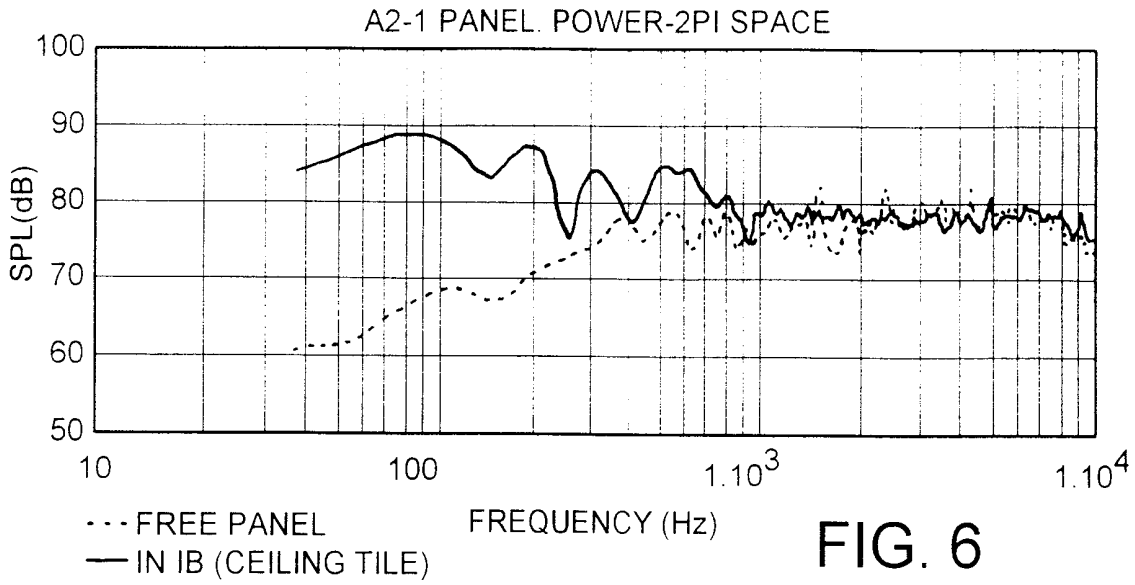


FIG. 6

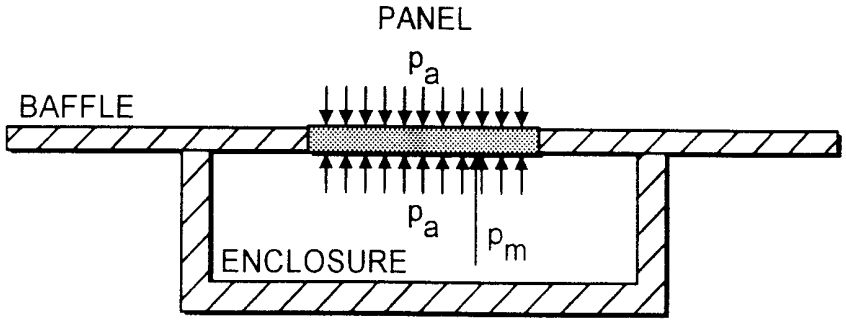


FIG. 7

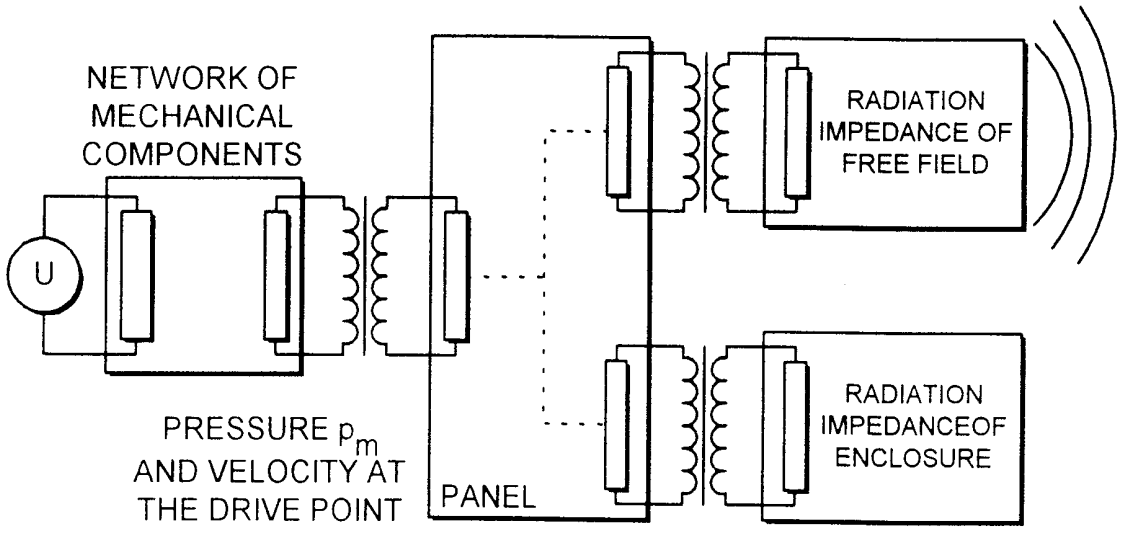


FIG. 8

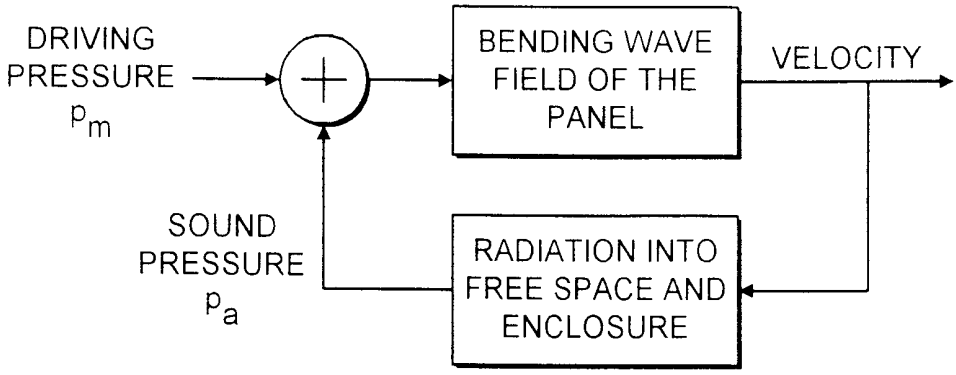


FIG. 9

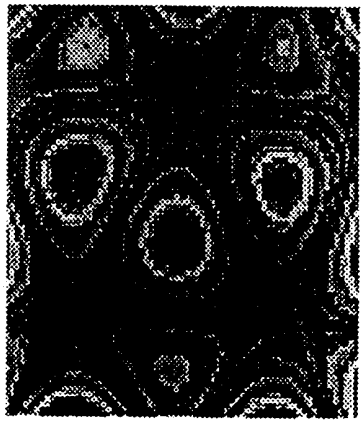

FIG. 10

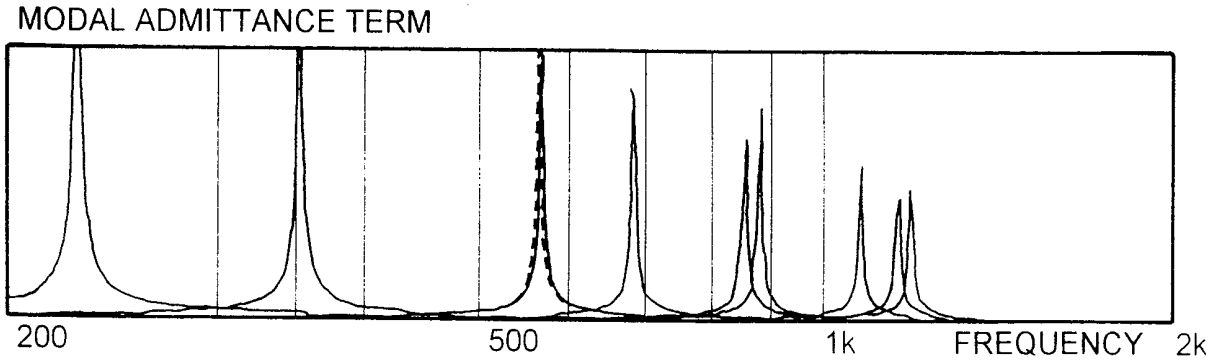


FIG. 11

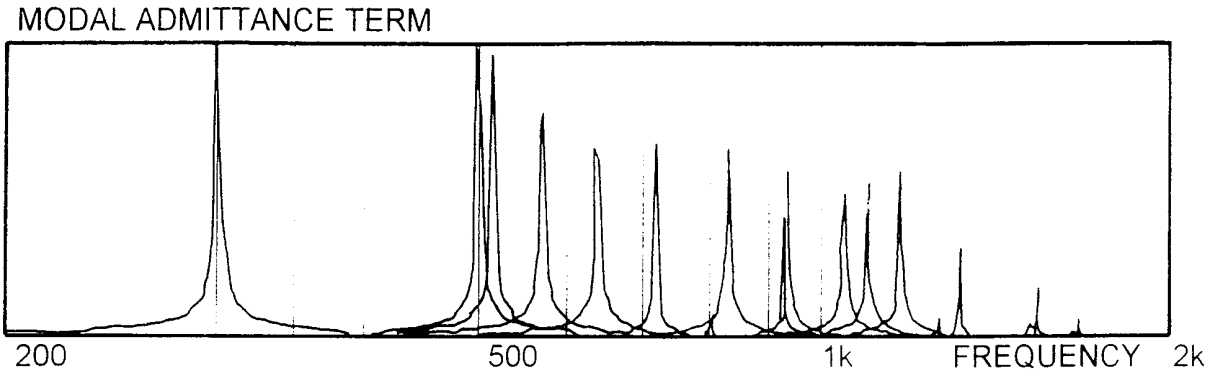


FIG. 12

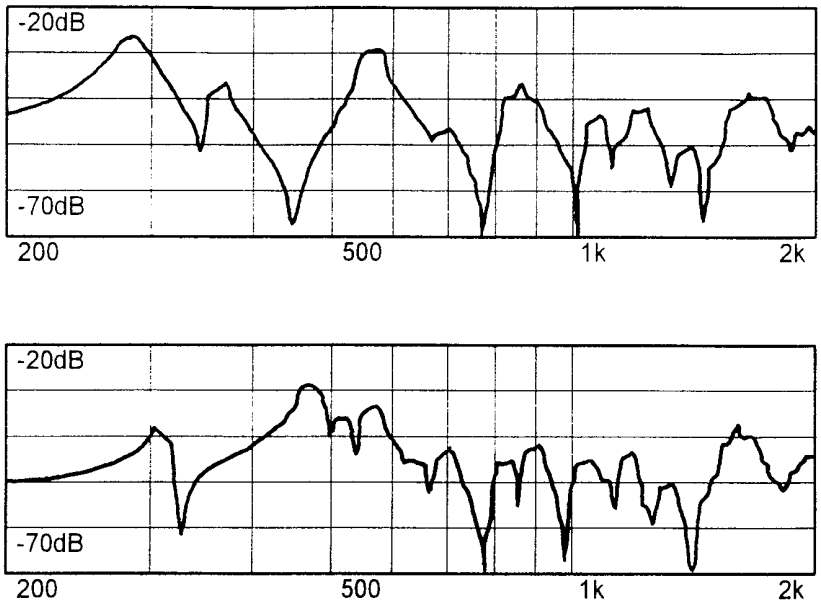


FIG. 13

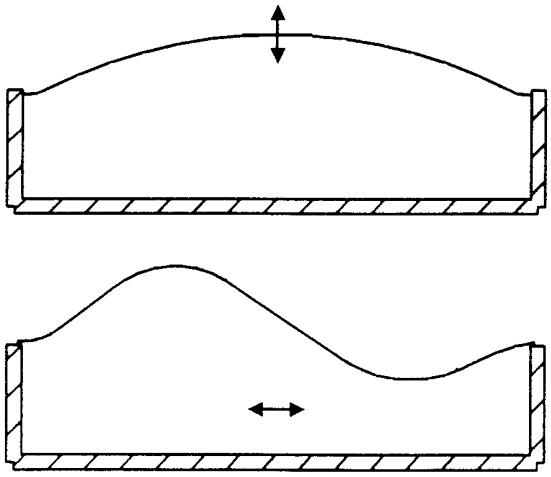

FIG. 14

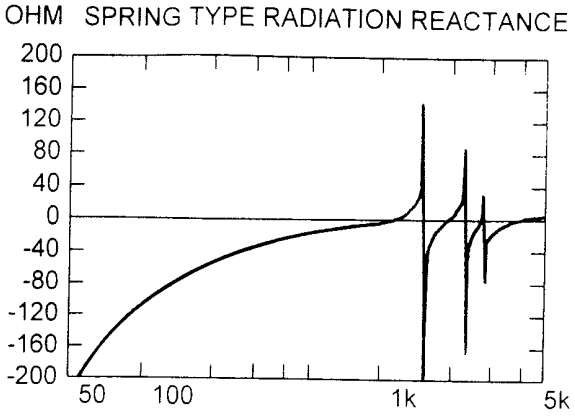


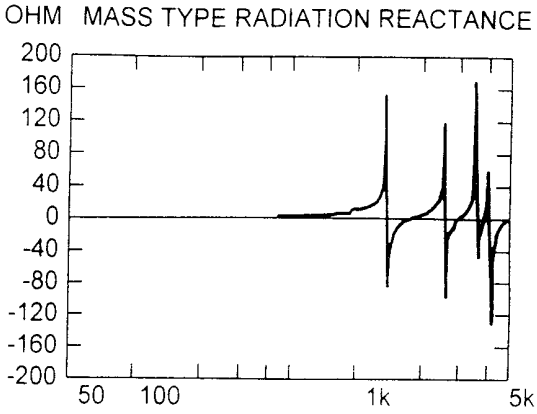


FIG. 15

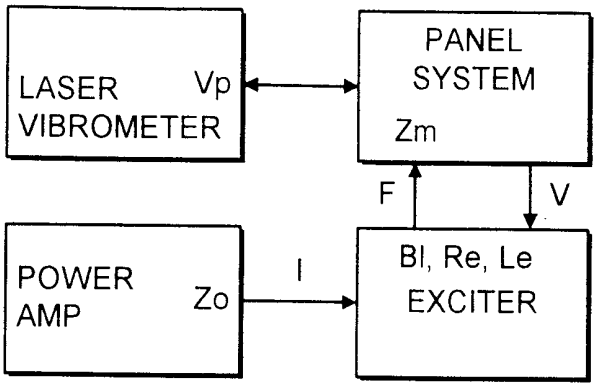


FIG. 16

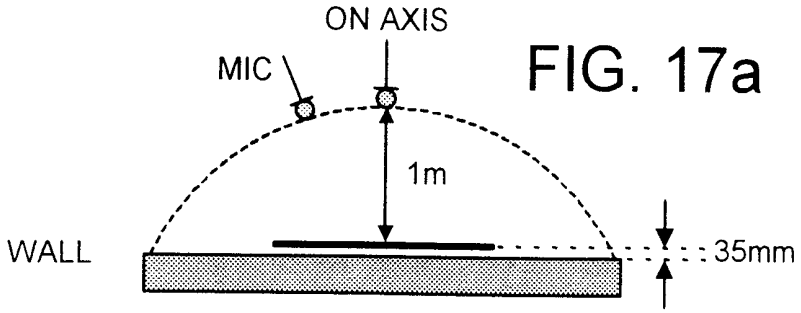


FIG. 17a

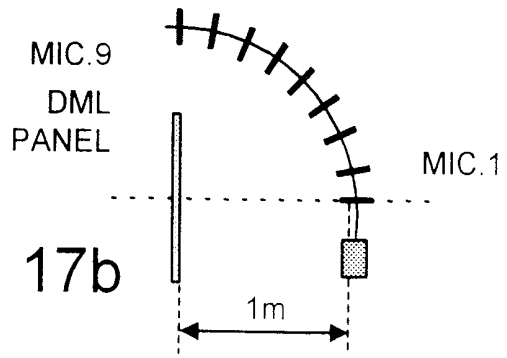


FIG. 17b

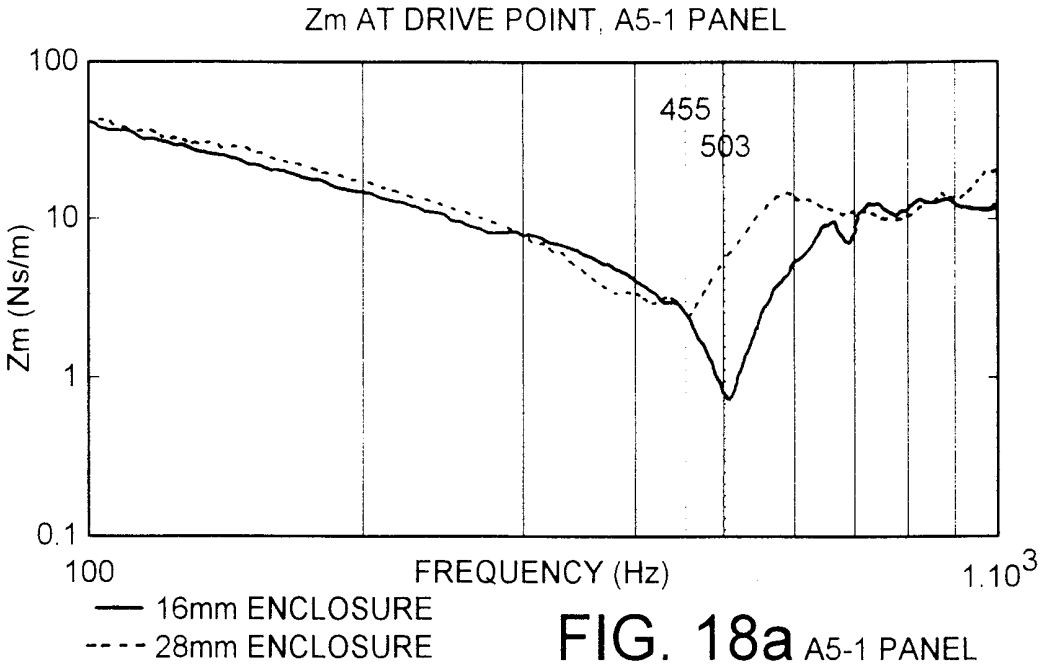


FIG. 18a A5-1 PANEL

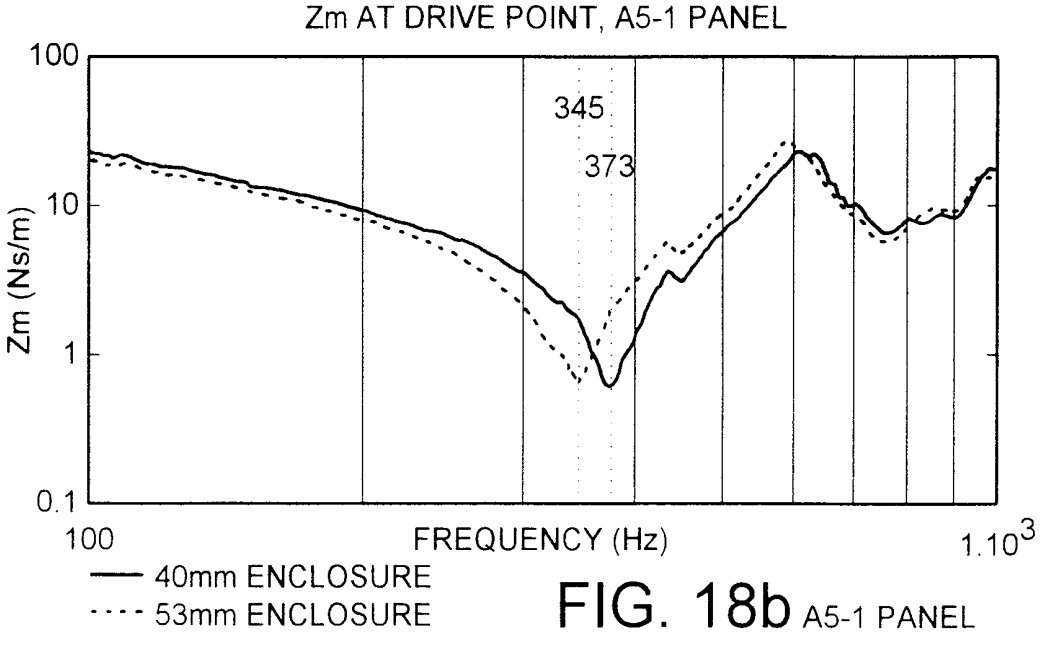


FIG. 18b A5-1 PANEL

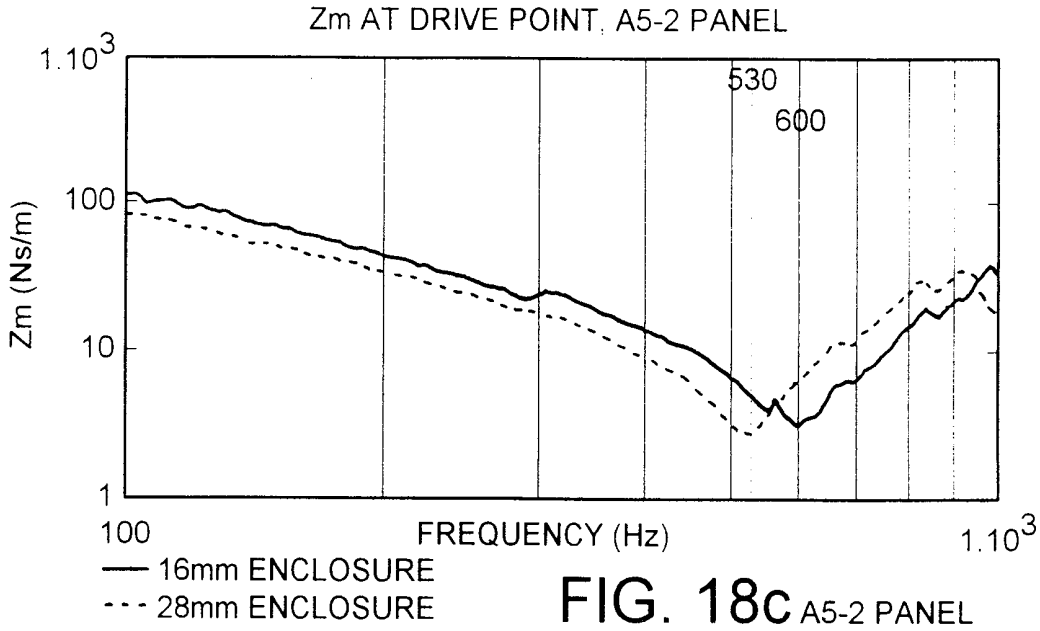


FIG. 18c A5-2 PANEL

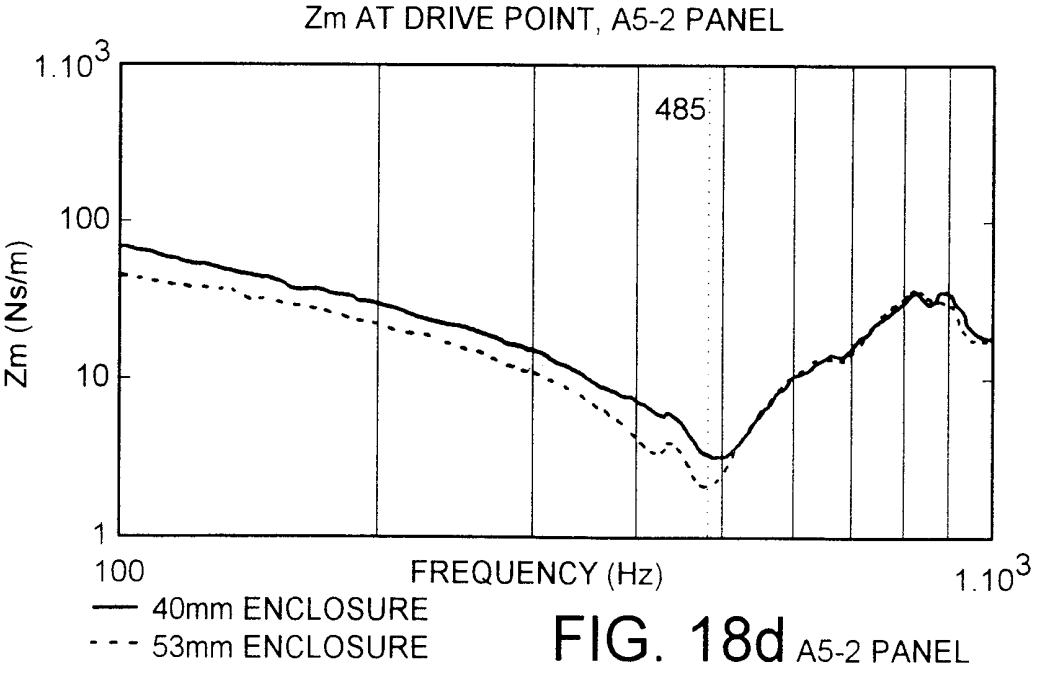


FIG. 18d A5-2 PANEL

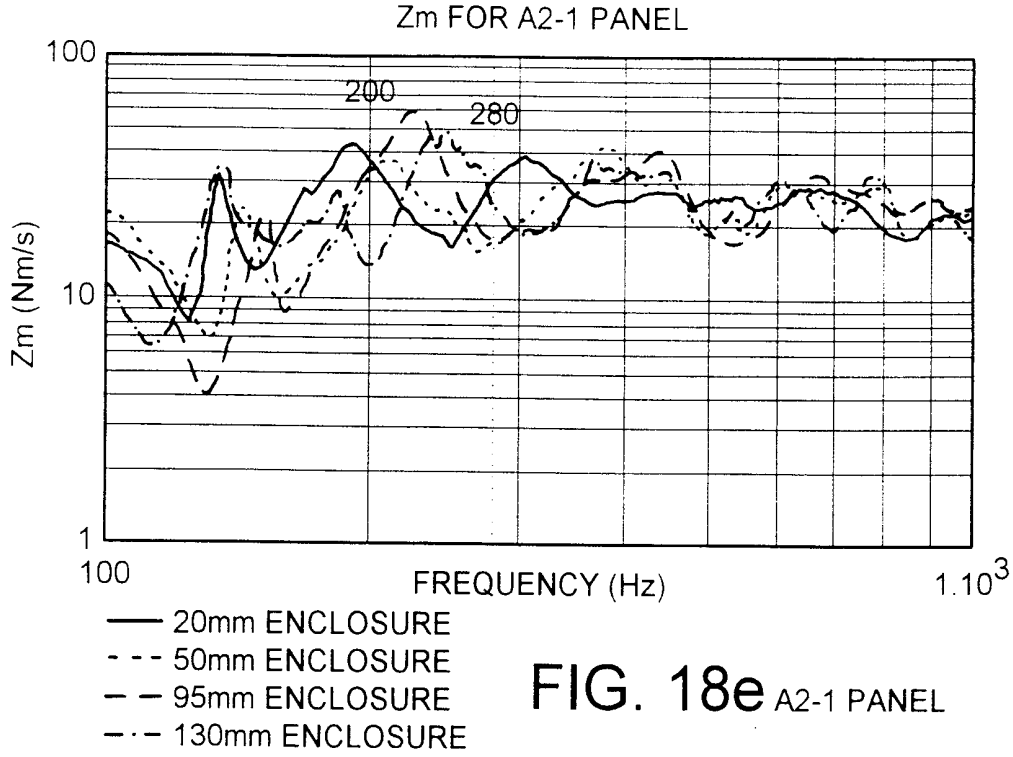


FIG. 18e A2-1 PANEL

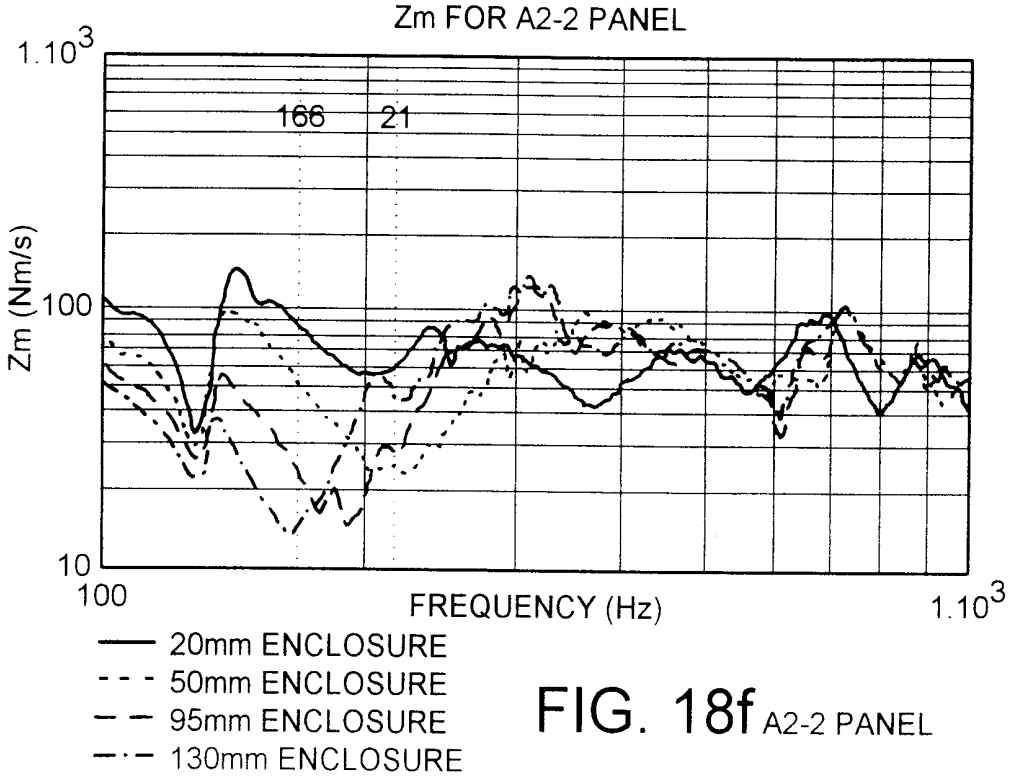


FIG. 18f A2-2 PANEL

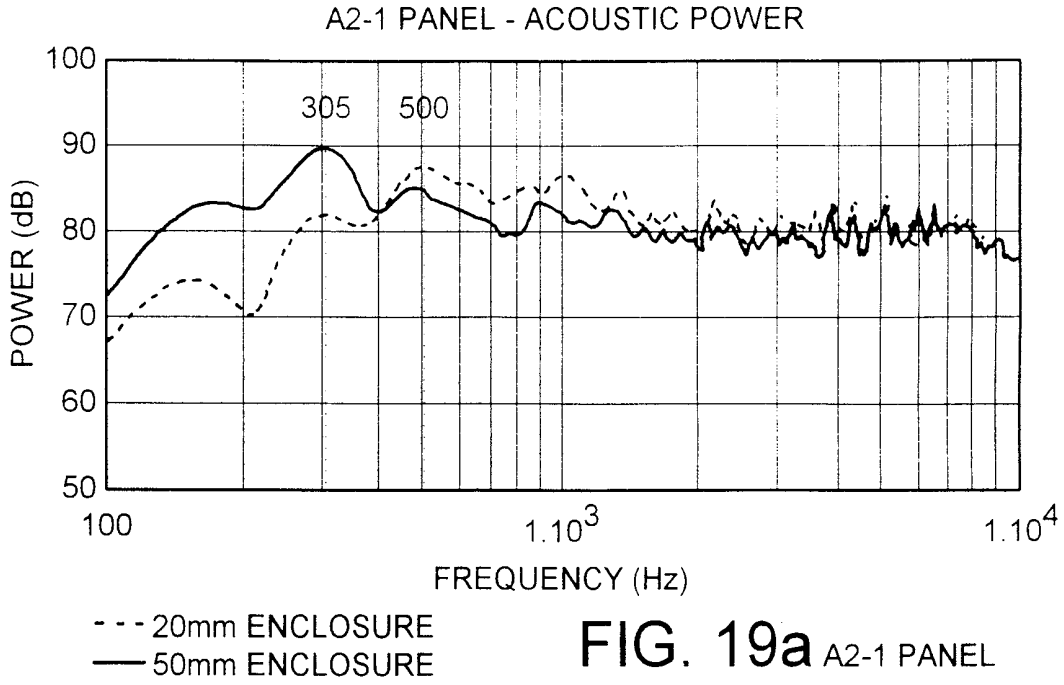


FIG. 19a A2-1 PANEL

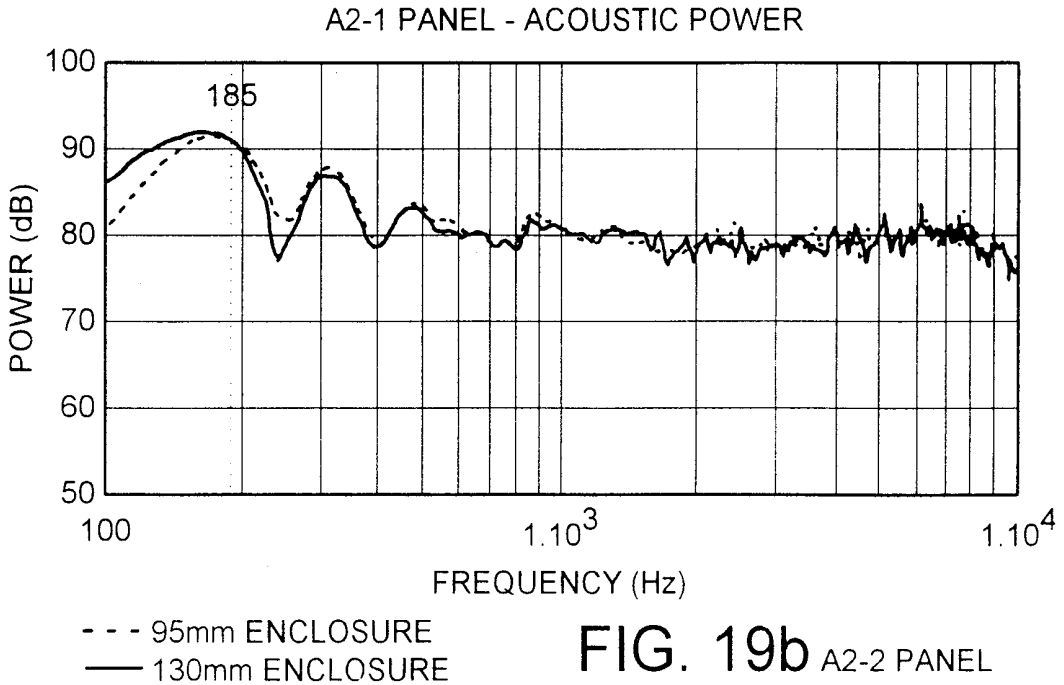


FIG. 19b A2-2 PANEL

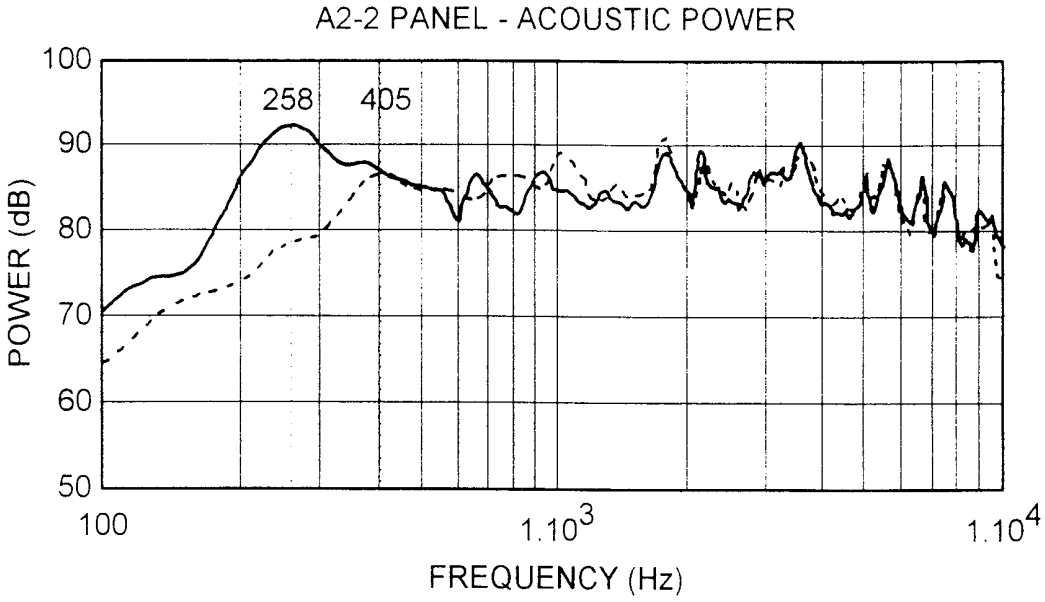


FIG. 19c A2-1 PANEL

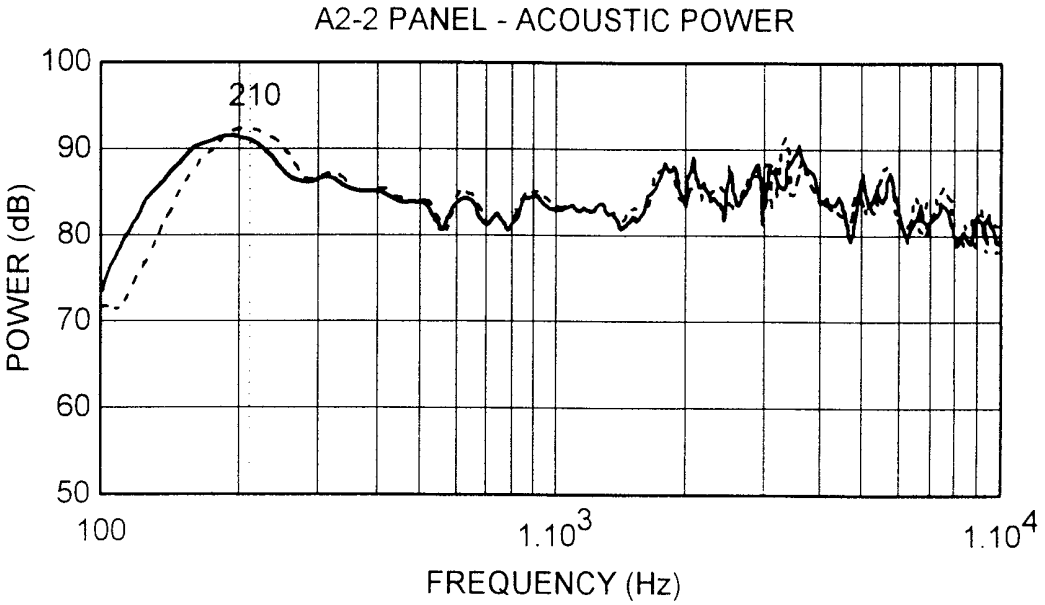


FIG. 19d A2-1 PANEL

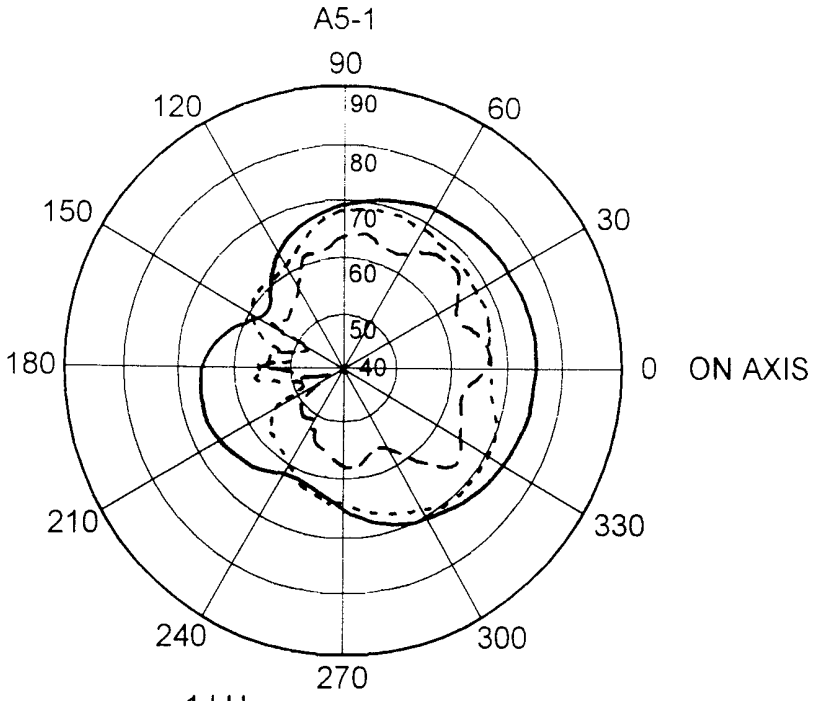


FIG. 20a
A5-1 PANEL

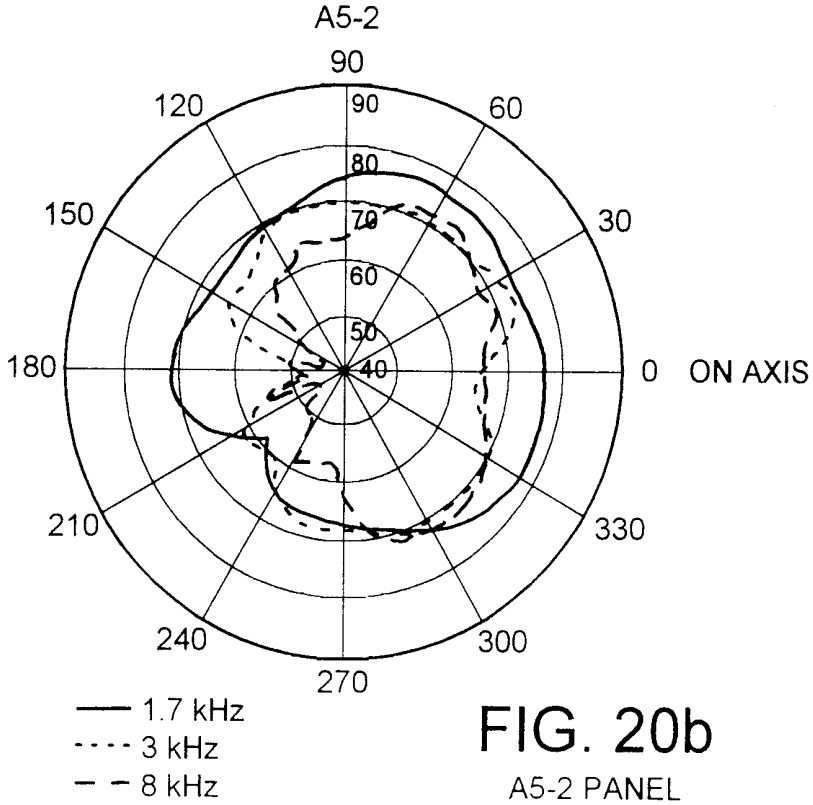


FIG. 20b
A5-2 PANEL

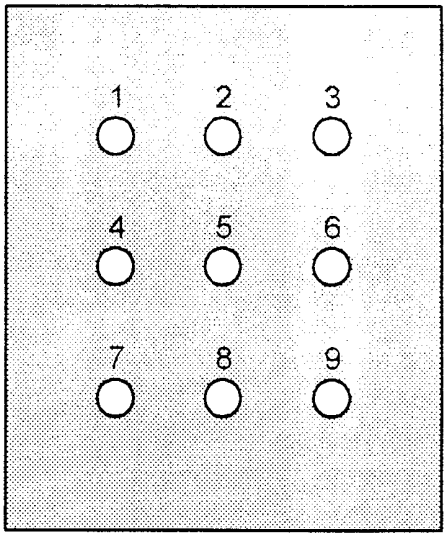


FIG. 21

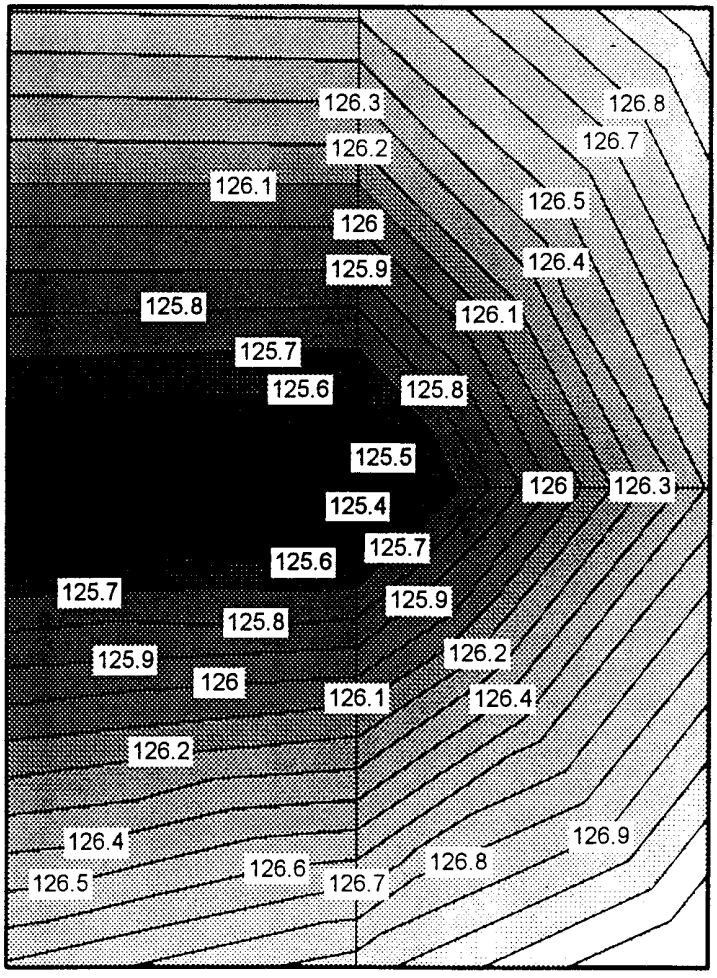


FIG. 22a

A5-1 PANEL 483Hz

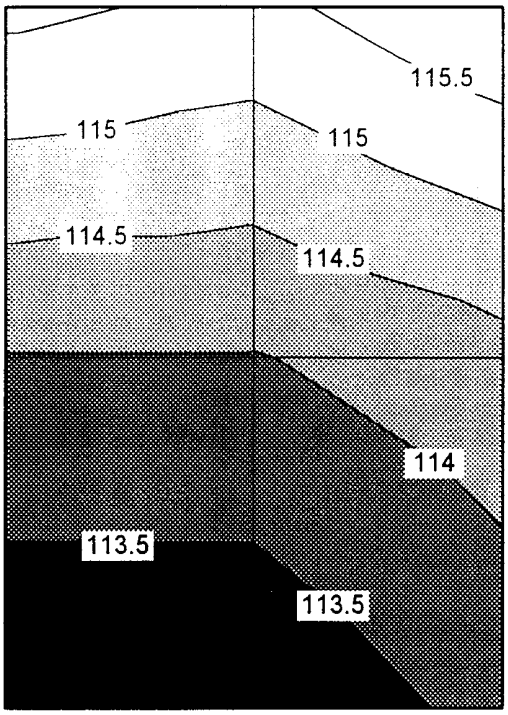


FIG. 22b

A5-1 PANEL 301Hz

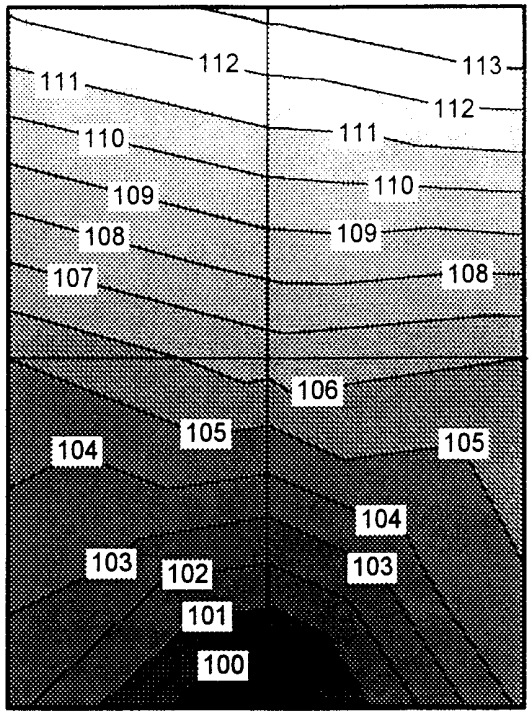


FIG. 22c

A5-1 PANEL 817Hz

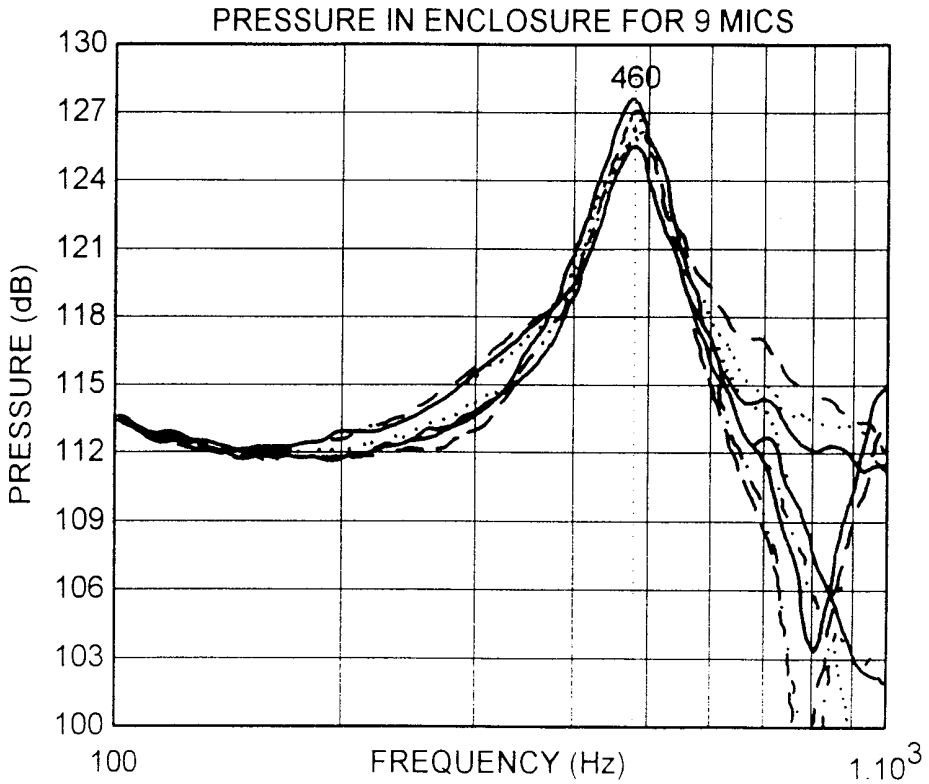


FIG. 23

A5-1 PANEL

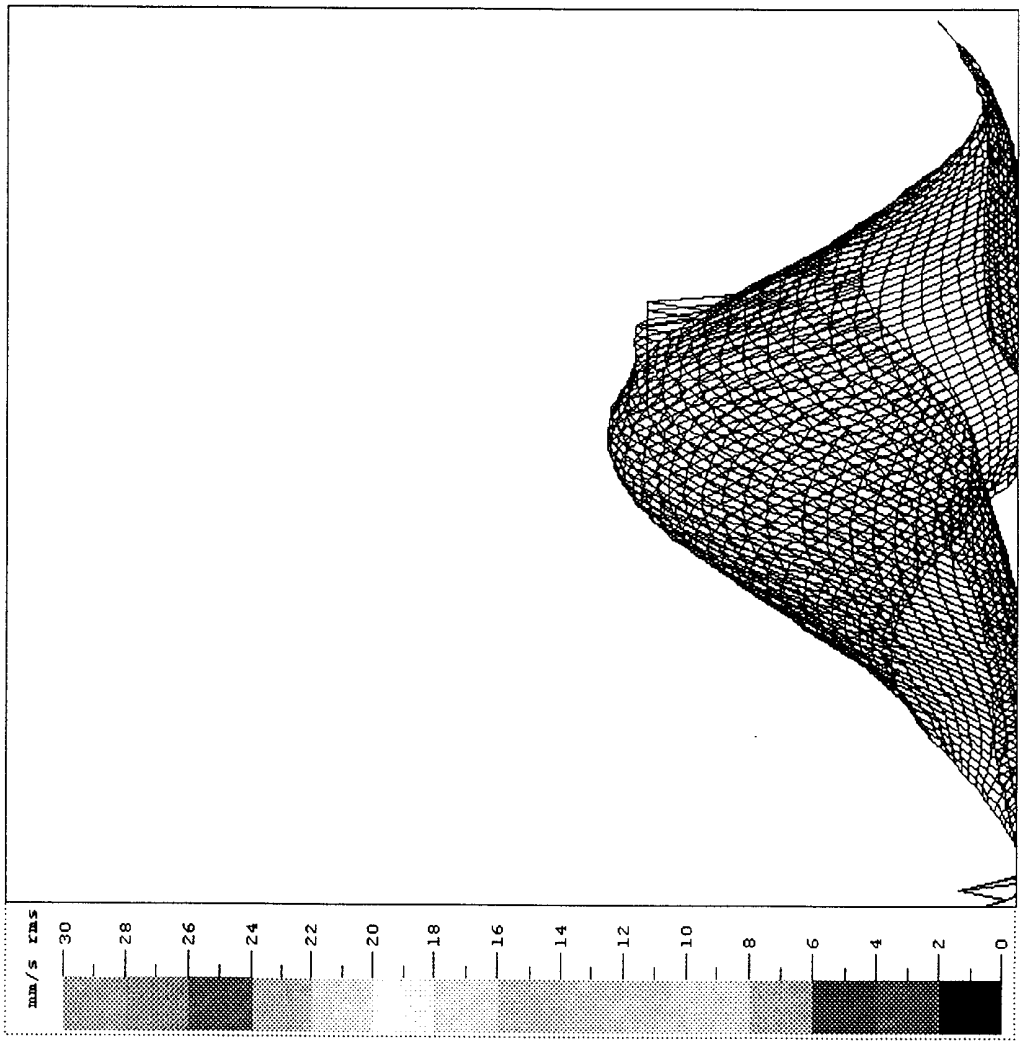
mm/s rms
30
28
26
24
22
20
18
16
14
12
10
8
6
4
2
0

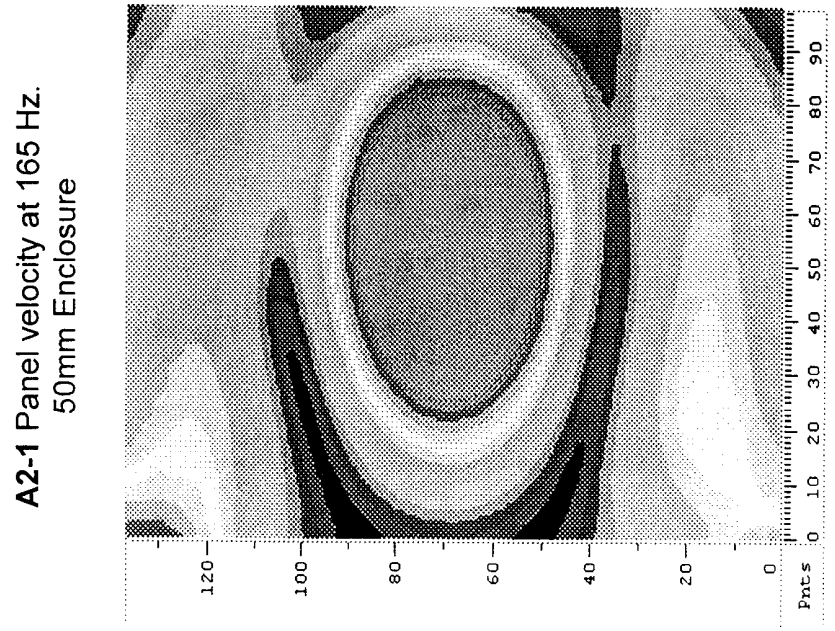
A2-1 Panel velocity at 165 Hz.
50mm Enclosure
120
100
80
60
40
20
0
Pnts
0 10 20 30 40 50 60 70 80 90

FIG. 24a

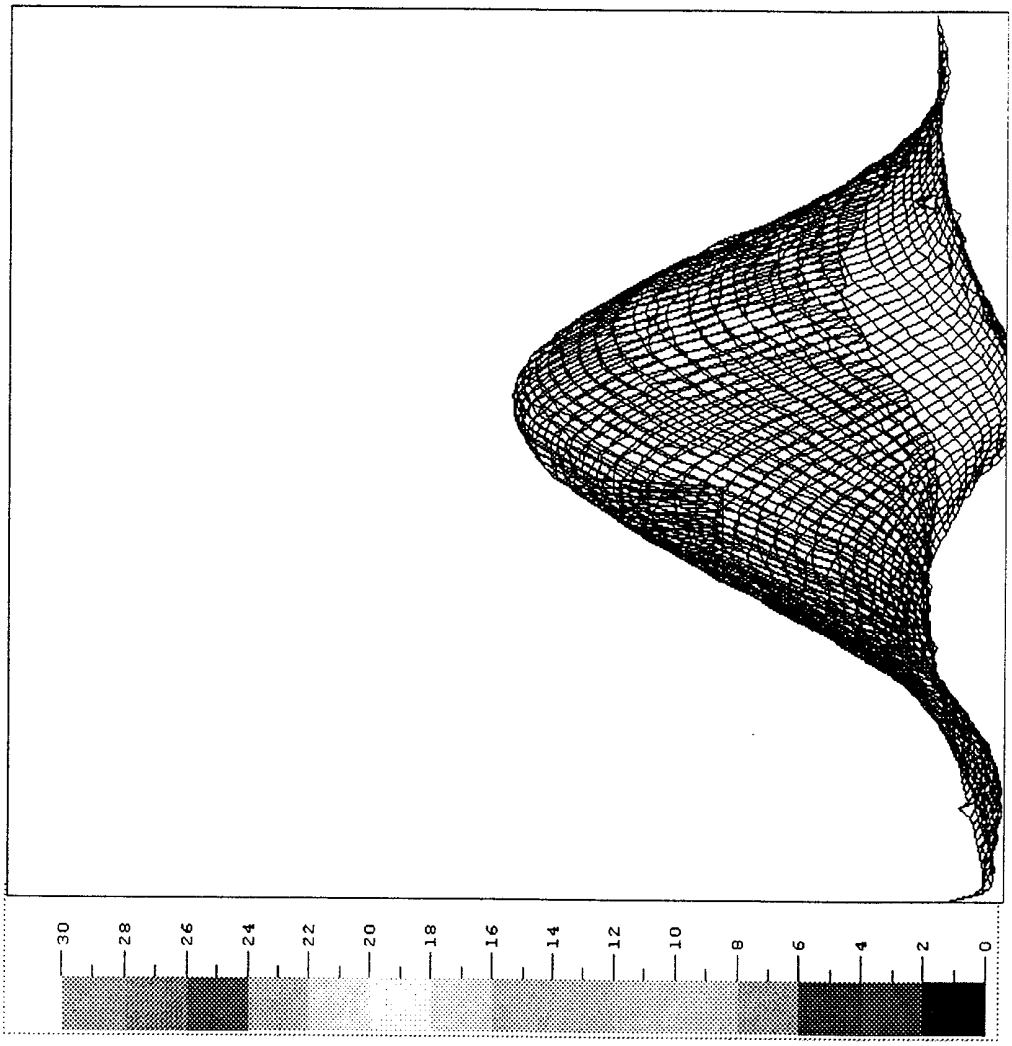
30
28
26
24
22
20
18
16
14
12
10
8
6
4
2
0

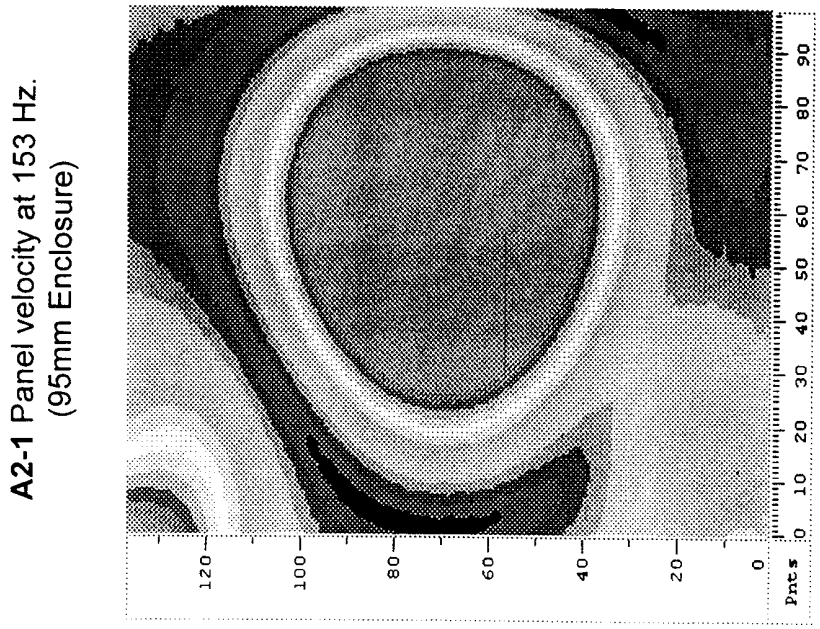
A2-1 Panel velocity at 153 Hz.
(95mm Enclosure)
120
100
80
60
40
20
0
Pnts
0 10 20 30 40 50 60 70 80 90

FIG. 24b

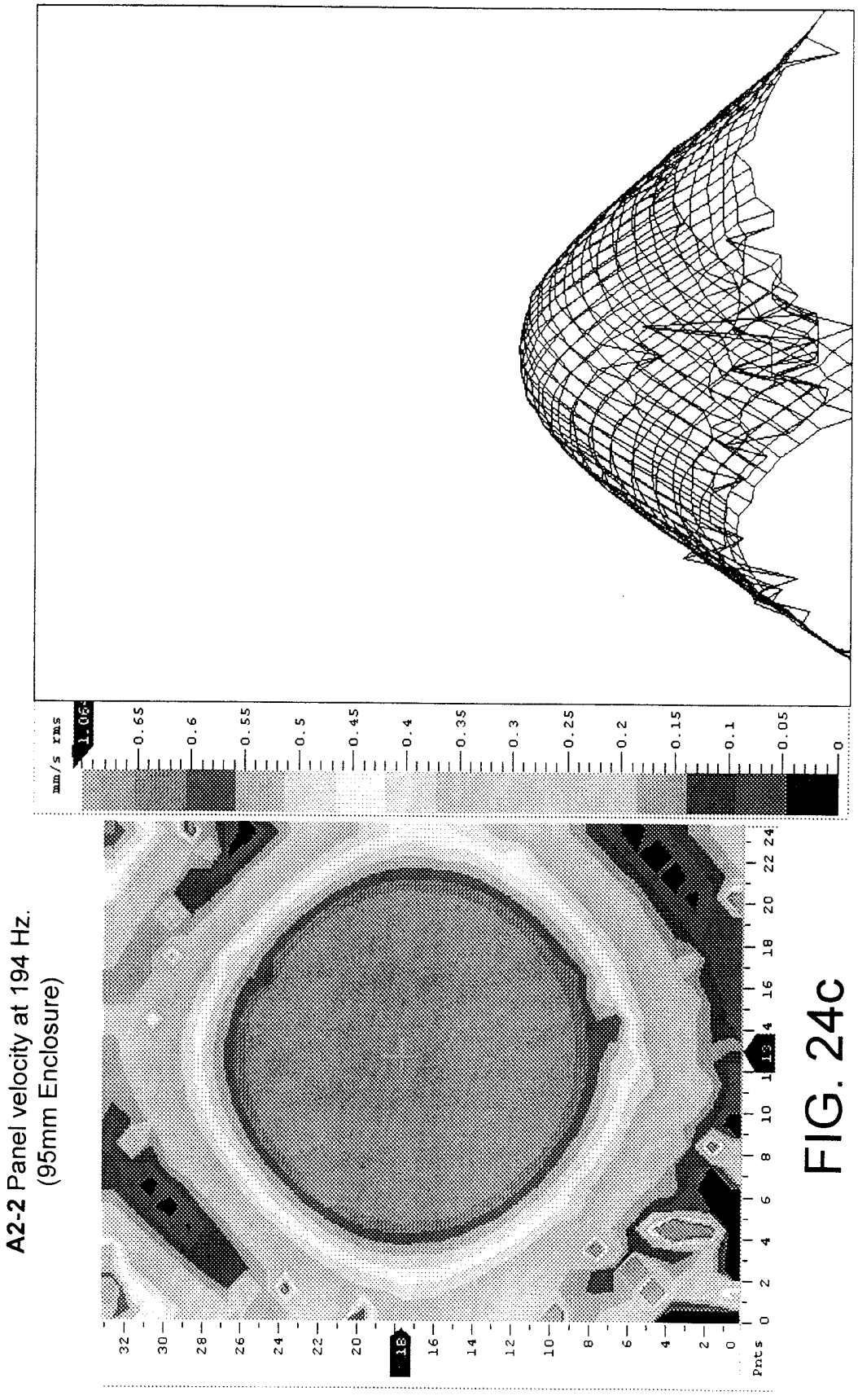
A2-2 Panel velocity at 194 Hz.
(95mm Enclosure)
mm/s rms
1.06
0.65
0.6
0.55
0.5
0.45
0.4
0.35
0.3
0.25
0.2
0.15
0.1
0.05
0
Pnts
0 2 4 6 8 10 12 14 16 18 20 22 24
32 30 28 26 24 22 20 18 16 14 12 10 8 6 4 2 0

FIG. 24c

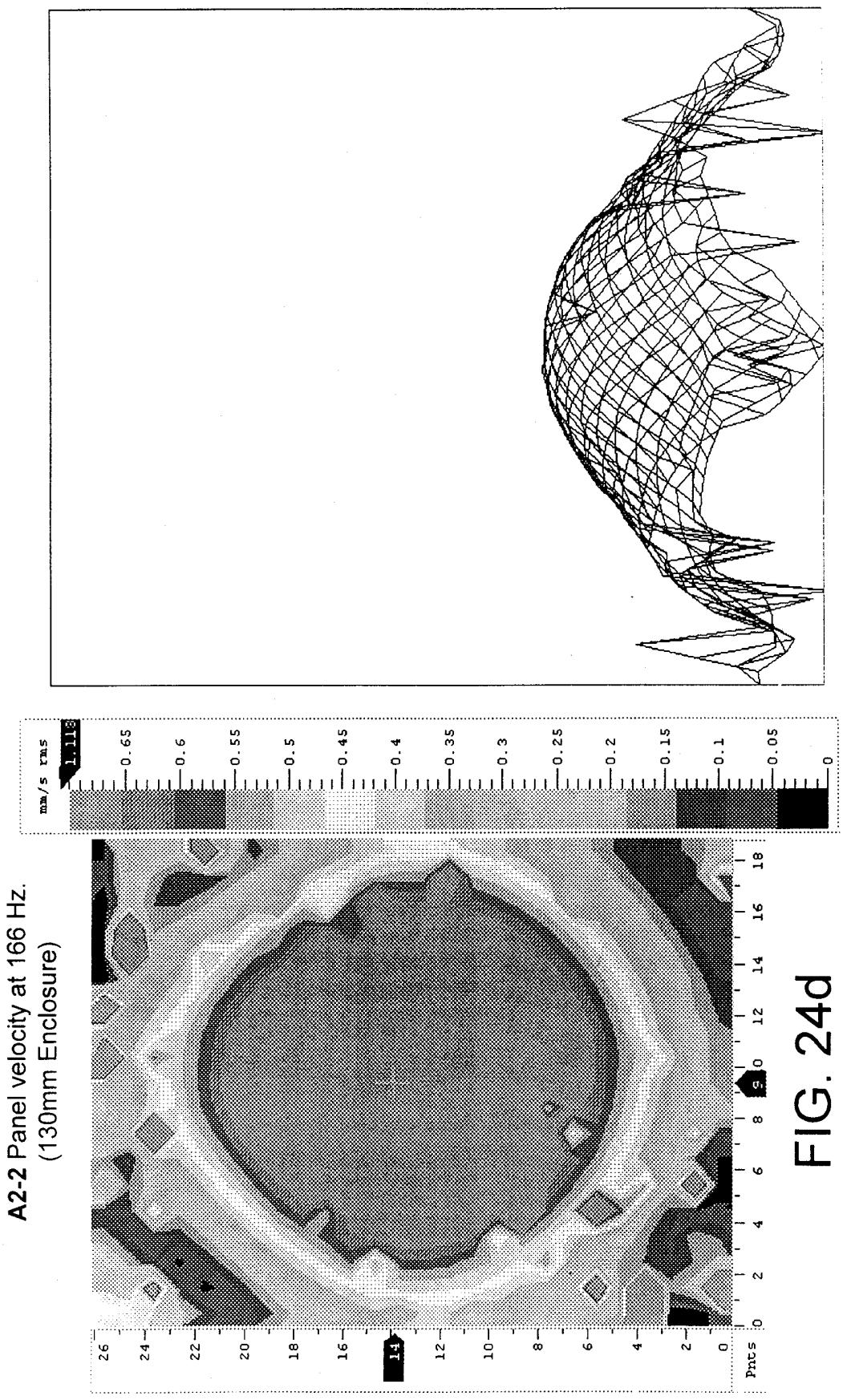
A2-2 Panel velocity at 166 Hz.
(130mm Enclosure)
mm/s rms
1.118
0.65
0.6
0.55
0.5
0.45
0.4
0.35
0.3
0.25
0.2
0.15
0.1
0.05
0
Pnts

FIG. 24d

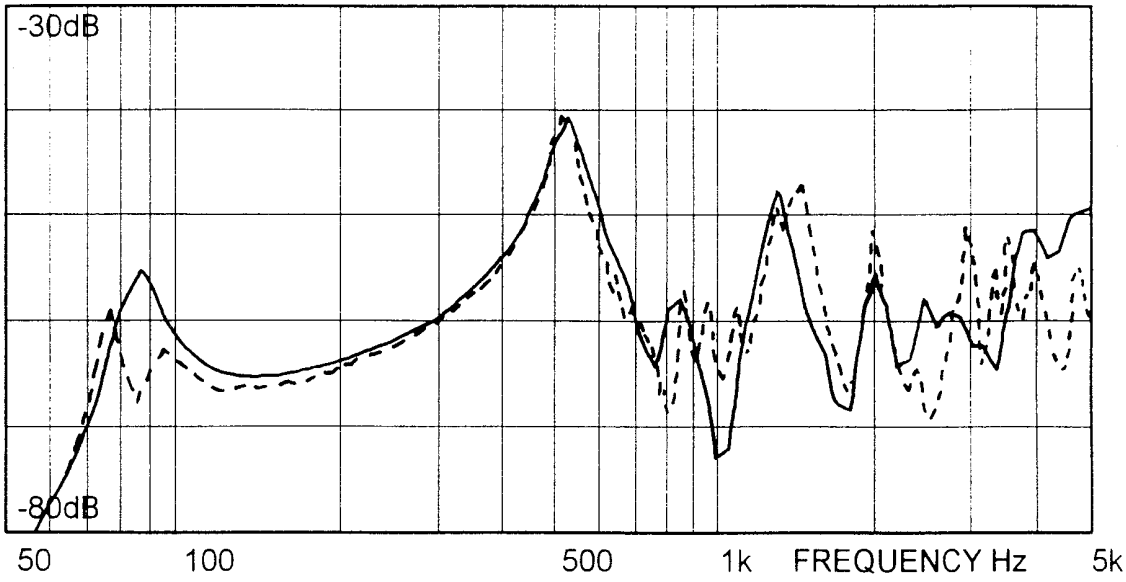


FIG. 25a

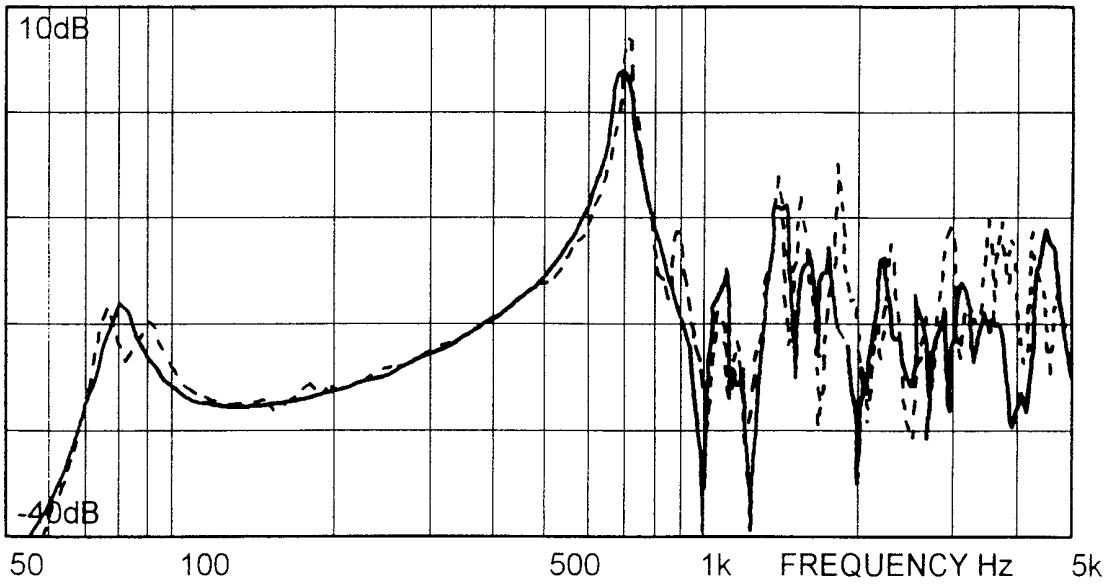


FIG. 25b

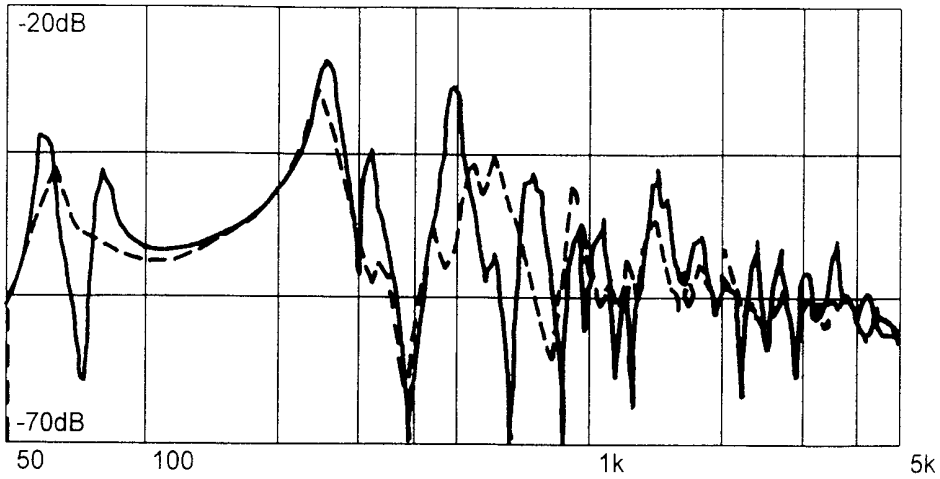


FIG. 26a
FREE SPACE

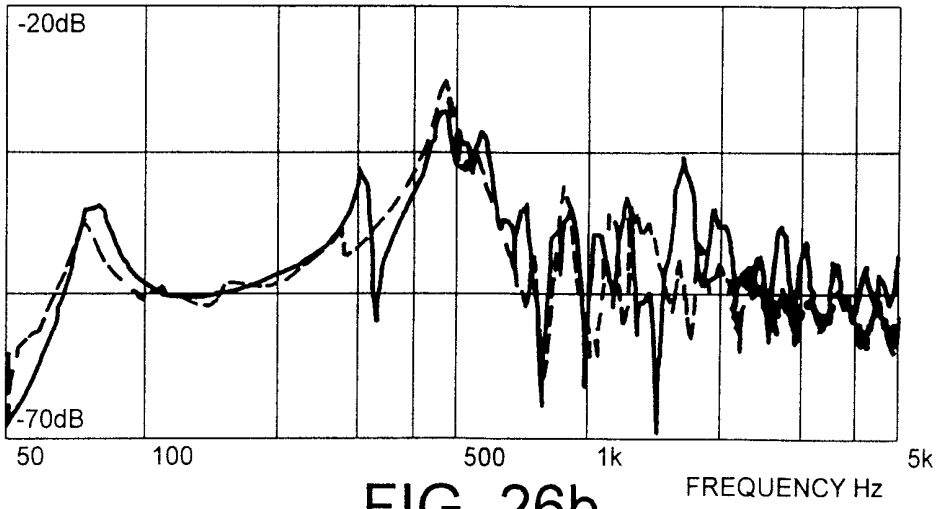


FIG. 26b
DOUBLE ENCLOSURE

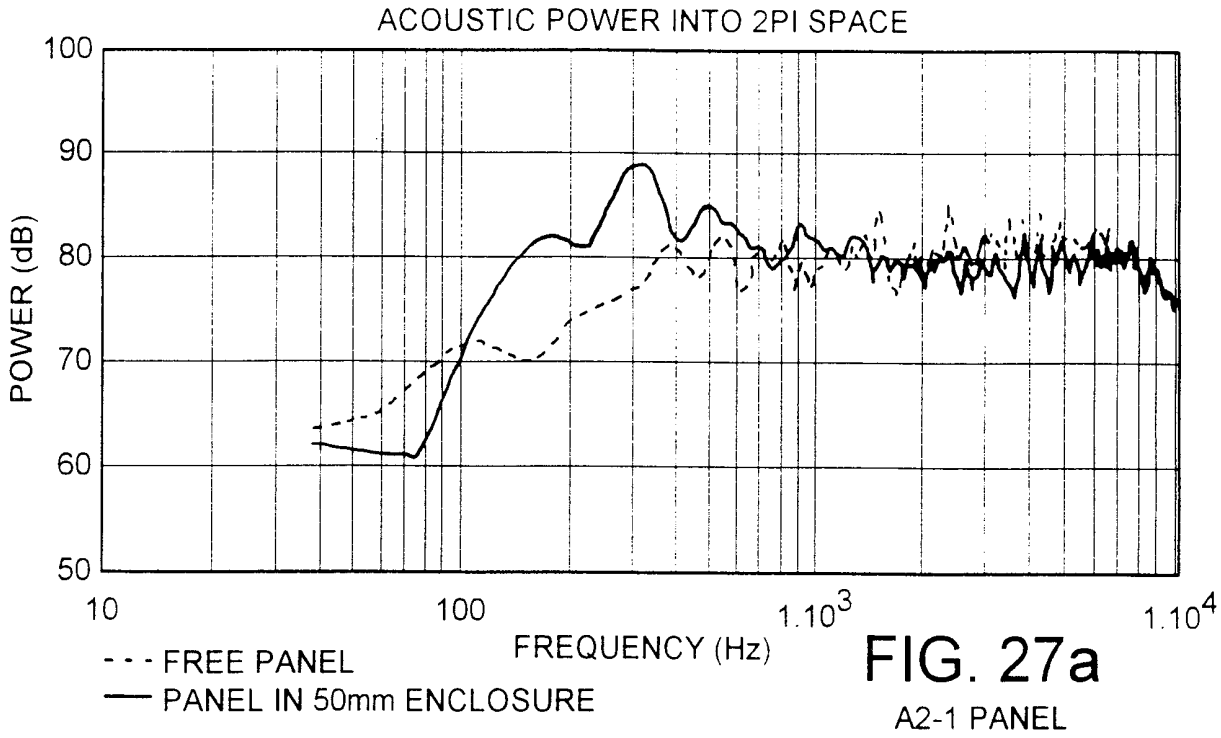


FIG. 27a
A2-1 PANEL

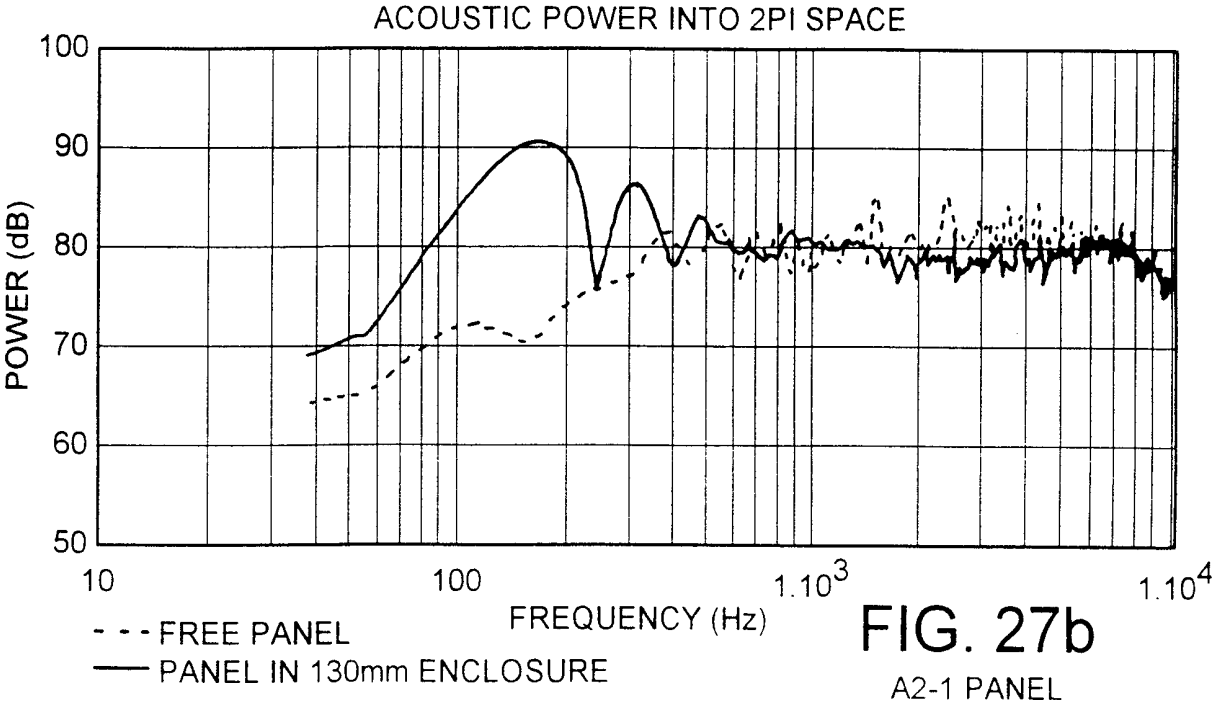


FIG. 27b
A2-1 PANEL

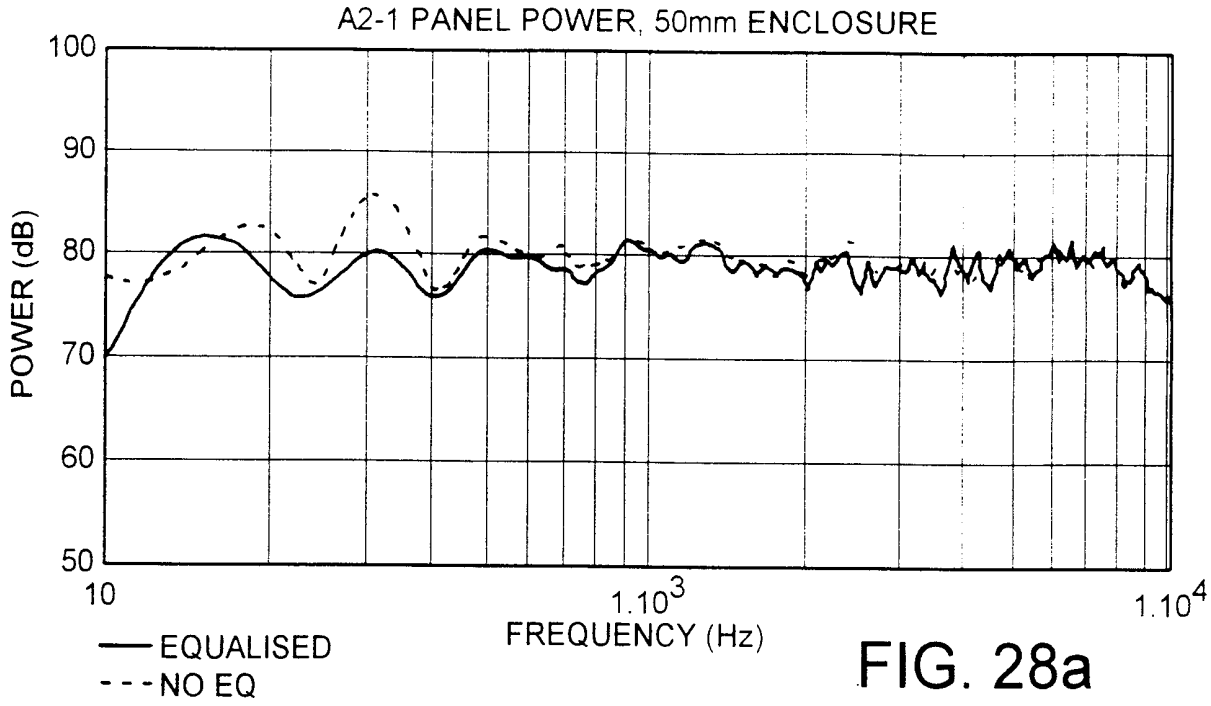


FIG. 28a

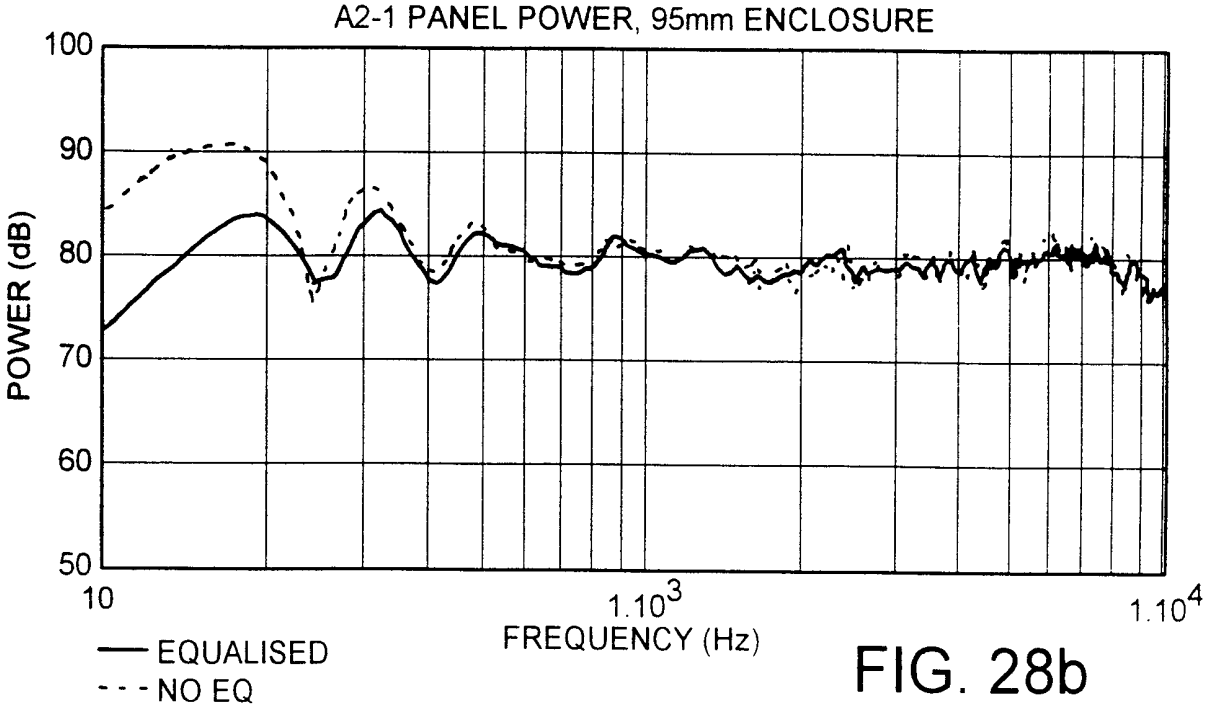


FIG. 28b

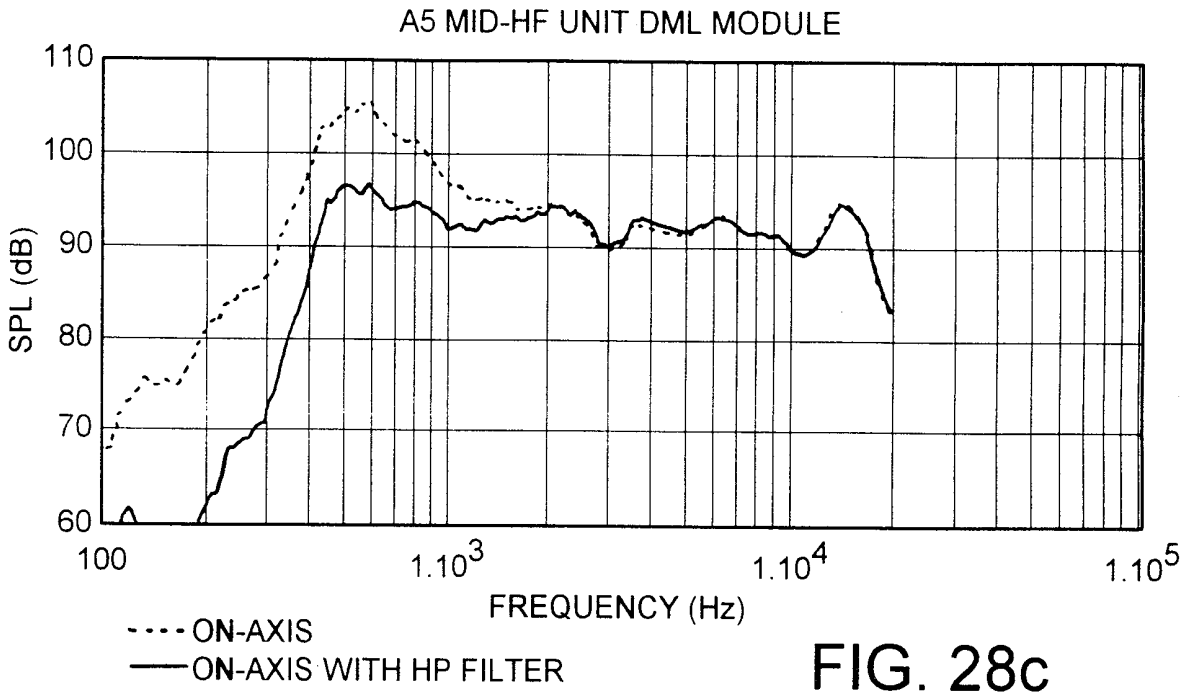
A5 MID-HF UNIT DML MODULE
110
100
90
80
70
60
SPL (dB)
100
1.10^3
1.10^4
1.10^5
FREQUENCY (Hz)
ON-AXIS
ON-AXIS WITH HP FILTER

FIG. 28c

# INTERNATIONAL SEARCH REPORT

Inter ɔnal Application No
PCT/GB 99/01974

A. CLASSIFICATION OF SUBJECT MATTER
IPC 7 H04R7/06 H04R9/06 G06F1/16

According to International Patent Classification (IPC) or to both national classification and IPC

B. FIELDS SEARCHED

Minimum documentation searched (classification system followed by classification symbols)
IPC 7 H04R G06F

Documentation searched other than minimum documentation to the extent that such documents are included in the fields searched

Electronic data base consulted during the international search (name of data base and, where practical, search terms used)

C. DOCUMENTS CONSIDERED TO BE RELEVANT

| Category ° | Citation of document, with indication, where appropriate, of the relevant passages | Relevant to claim No. |
|---|---|---|
| Y | WO 97 09842 A (VERITY GROUP PLC) 13 March 1997 (1997-03-13) cited in the application | 1,32,34 |
| A | page 69, line 19 -page 71, line 34; figures 27-30 | 3-16,18, 20,22 |
| Y | FR 2 649 575 A (THOMSON CONSUMER ELECTRONICS) 11 January 1991 (1991-01-11) page 2, line 23 -page 5, line 8; figures | 1,32,34 |
| A | US 4 352 961 A (KUMADA AKIO ET AL) 5 October 1982 (1982-10-05) column 2, line 14 - line 47 | 2,17 |

-/--

[X] Further documents are listed in the continuation of box C.

[X] Patent family members are listed in annex.

° Special categories of cited documents :

"A" document defining the general state of the art which is not considered to be of particular relevance

"E" earlier document but published on or after the international filing date

"L" document which may throw doubts on priority claim(s) or which is cited to establish the publication date of another citation or other special reason (as specified)

"O" document referring to an oral disclosure, use, exhibition or other means

"P" document published prior to the international filing date but later than the priority date claimed

"T" later document published after the international filing date or priority date and not in conflict with the application but cited to understand the principle or theory underlying the invention

"X" document of particular relevance; the claimed invention cannot be considered novel or cannot be considered to involve an inventive step when the document is taken alone

"Y" document of particular relevance; the claimed invention cannot be considered to involve an inventive step when the document is combined with one or more other such documents, such combination being obvious to a person skilled in the art.

"&" document member of the same patent family

| Date of the actual completion of the international search | Date of mailing of the international search report |
|---|---|
| 6 December 1999 | 13/12/1999 |

| Name and mailing address of the ISA | Authorized officer |
|---|---|
| European Patent Office, P.B. 5818 Patentlaan 2<br>NL – 2280 HV Rijswijk<br>Tel. (+31–70) 340–2040, Tx. 31 651 epo nl,<br>Fax: (+31–70) 340–3016 | Gastaldi, G |

1

Form PCT/ISA/210 (second sheet) (July 1992)

# INTERNATIONAL SEARCH REPORT

Inter onal Application No
PCT/GB 99/01974

C.(Continuation) DOCUMENTS CONSIDERED TO BE RELEVANT

| Category ° | Citation of document, with indication,where appropriate, of the relevant passages | Relevant to claim No. |
|---|---|---|
| A | PATENT ABSTRACTS OF JAPAN<br>vol. 010, no. 228 (E-426),<br>8 August 1986 (1986-08-08)<br>& JP 61 061598 A (MATSUSHITA ELECTRIC IND CO LTD), 29 March 1986 (1986-03-29)<br>abstract | 2,25 |
| A | EP 0 361 249 A (ELECTRONIC WERKE DEUTSCHLAND) 4 April 1990 (1990-04-04)<br>page 2, line 39 - line 45; figures | 2,25 |
| E | WO 99 37121 A (NEW TRANSDUCERS LTD)<br>22 July 1999 (1999-07-22)<br>cited in the application<br>the whole document | 1 |

1

Form PCT/ISA/210 (continuation of second sheet) (July 1992)

# INTERNATIONAL SEARCH REPORT

information on patent family members

Inte onal Application No
PCT/GB 99/01974

| Patent document cited in search report | Publication date | Patent family member(s) | Publication date |
|---|---|---|---|
| WO 9709842 A | 13-03-1997 | AT 177579 T | 15-03-1999 |
| | | AT 177574 T | 15-03-1999 |
| | | AT 177580 T | 15-03-1999 |
| | | AT 177575 T | 15-03-1999 |
| | | AT 186617 T | 15-11-1999 |
| | | AT 177581 T | 15-03-1999 |
| | | AT 177582 T | 15-03-1999 |
| | | AT 177583 T | 15-03-1999 |
| | | AT 177578 T | 15-03-1999 |
| | | AT 177576 T | 15-03-1999 |
| | | AT 179297 T | 15-05-1999 |
| | | AT 177577 T | 15-03-1999 |
| | | AT 179563 T | 15-05-1999 |
| | | AT 176826 T | 15-03-1999 |
| | | AT 179045 T | 15-04-1999 |
| | | AT 179296 T | 15-05-1999 |
| | | AT 177281 T | 15-03-1999 |
| | | AT 179564 T | 15-05-1999 |
| | | AT 177282 T | 15-03-1999 |
| | | AT 179043 T | 15-04-1999 |
| | | AT 179044 T | 15-04-1999 |
| | | AU 702865 B | 11-03-1999 |
| | | AU 6880196 A | 27-03-1997 |
| | | AU 702920 B | 11-03-1999 |
| | | AU 6880296 A | 27-03-1997 |
| | | AU 702867 B | 11-03-1999 |
| | | AU 6880396 A | 27-03-1997 |
| | | AU 703015 B | 11-03-1999 |
| | | AU 6880496 A | 27-03-1997 |
| | | AU 702863 B | 11-03-1999 |
| | | AU 6880596 A | 27-03-1997 |
| | | AU 702873 B | 11-03-1999 |
| | | AU 6880696 A | 27-03-1997 |
| | | AU 702999 B | 11-03-1999 |
| | | AU 6880796 A | 27-03-1997 |
| | | AU 703061 B | 11-03-1999 |
| | | AU 6880896 A | 27-03-1997 |
| | | AU 703000 B | 11-03-1999 |
| | | AU 6880996 A | 27-03-1997 |
| | | AU 703071 B | 11-03-1999 |
| | | AU 6881096 A | 27-03-1997 |
| | | AU 703058 B | 11-03-1999 |
| | | AU 6881296 A | 27-03-1997 |
| | | AU 705592 B | 27-05-1999 |
| | | AU 6881396 A | 27-03-1997 |
| | | AU 703296 B | 25-03-1999 |
| | | AU 6881496 A | 27-03-1997 |
| | | AU 699890 B | 17-12-1998 |
| | | AU 6881596 A | 27-03-1997 |
| | | AU 703198 B | 18-03-1999 |
| FR 2649575 A | 11-01-1991 | NONE | |
| US 4352961 A | 05-10-1982 | JP 56152399 A | 25-11-1981 |
| | | JP 56000800 A | 07-01-1981 |
| | | CH 641925 A,B | 30-03-1984 |
| | | DE 3021597 A | 18-12-1980 |
| | | GB 2052919 A,B | 28-01-1981 |

# INTERNATIONAL SEARCH REPORT

Information on patent family members

Inte onal Application No
PCT/GB 99/01974

| Patent document cited in search report | Publication date | Patent family member(s) | Publication date |
|---|---|---|---|
| US 4352961 A | | IN 152629 A | 25-02-1984 |
| JP 61061598 A | 29-03-1986 | NONE | |
| EP 0361249 A | 04-04-1990 | DE 3832616 A | 29-03-1990 |
| | | DE 3832617 A | 29-03-1990 |
| | | CN 1041681 A,B | 25-04-1990 |
| | | WO 9003711 A | 05-04-1990 |
| | | EP 0435914 A | 10-07-1991 |
| | | GR 3005002 T | 24-05-1993 |
| | | JP 4501046 T | 20-02-1992 |
| | | KR 126138 B | 26-12-1997 |
| | | US 5400414 A | 21-03-1995 |
| WO 9937121 A | 22-07-1999 | AU 2068199 A | 02-08-1999 |