United States Patent

Sequerra et al.

[15] **3,691,365**

[45] **Sept. 12, 1972**

[54] **ELECTRONIC FLASH LIGHTING SYSTEM**

[72] Inventors: **Richard I. Sequerra**, Forest Hills; **Sidney S. Smith**, Sea Cliff; **Fred J. Assenza**, Brooklyn, all of N.Y.; **William H. Greenbaum**, Demerest, N.J.

[73] Assignee: **Unilux, Inc.**, Woodside, N.Y.

[22] Filed: **Aug. 11, 1970**

[21] Appl. No.: **62,811**

[52] **U.S. Cl.** **240/1.3**, 240/47

[51] **Int. Cl.** **G03b 15/02**

[58] **Field of Search** ..... 240/1.3, 47, 2 V, 51.12, 9 A, 240/DIG. 2, 41; 315/241 P; 313/22, 36, 44

[56] **References Cited**

UNITED STATES PATENTS

841,765	1/1907	Bishop	240/2 V
1,231,677	7/1917	Wakefield	240/41
2,277,698	3/1942	Germeshausen	240/1.3
2,624,831	1/1953	Farber	240/1.3
3,120,352	2/1964	Akita et al.	240/47
3,375,366	3/1968	Scheppe	240/47

Primary Examiner—Louis J. Capozi

Attorney—Lester W. Clark, Robert S. Dunham, P. E. Henninger, Thomas F. Moran, Griffin Gerald W., R. Bradlee Boal, Christopher C. Dunham and Robert Scobey

[57] **ABSTRACT**

Electronic flash lighting system with helical flash tube and forced draft air cooling system producing a flow of air closely confined to a region adjacent the surfaces of the flash tube. This provides a high rate of heat dissipation and hence allows a high rate of flash repetition and/or high average power. The flash tube is mounted for adjustable movement with respect to a lens and reflector system so as to change the focus of the light beam passing through the lens.

17 Claims, 9 Drawing Figures

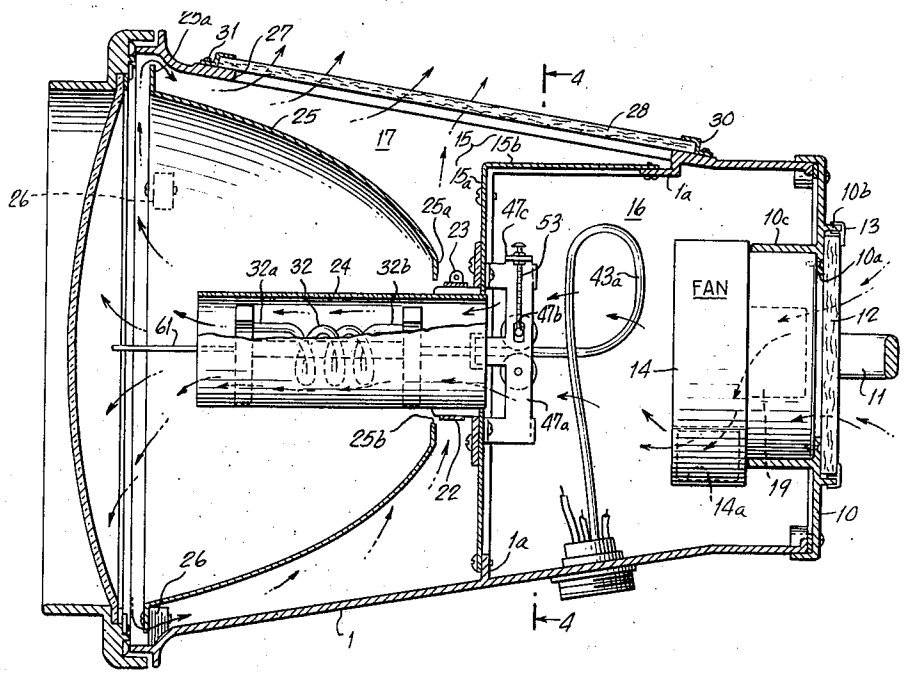

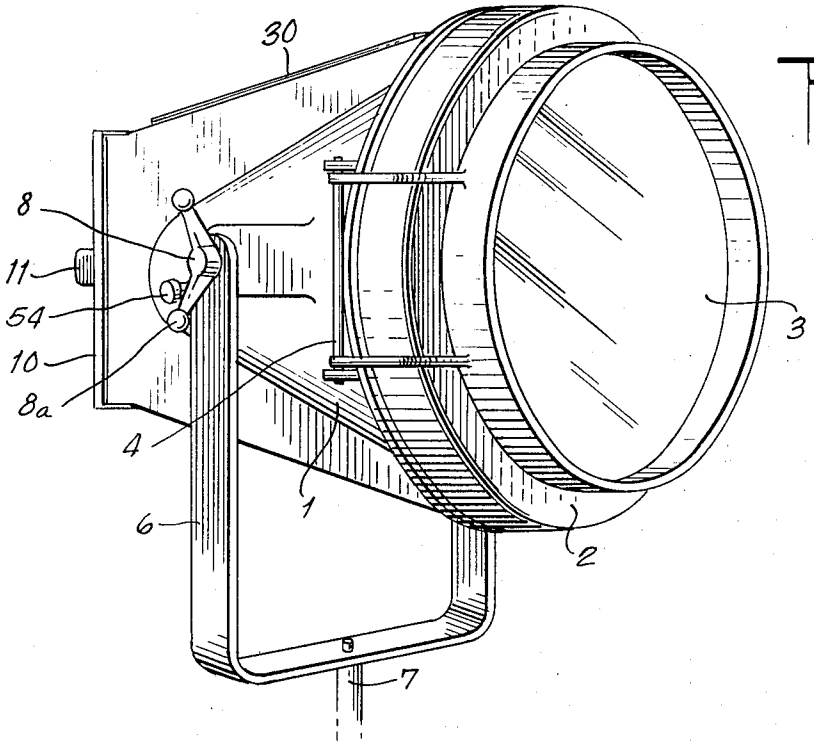

Fig. 1.

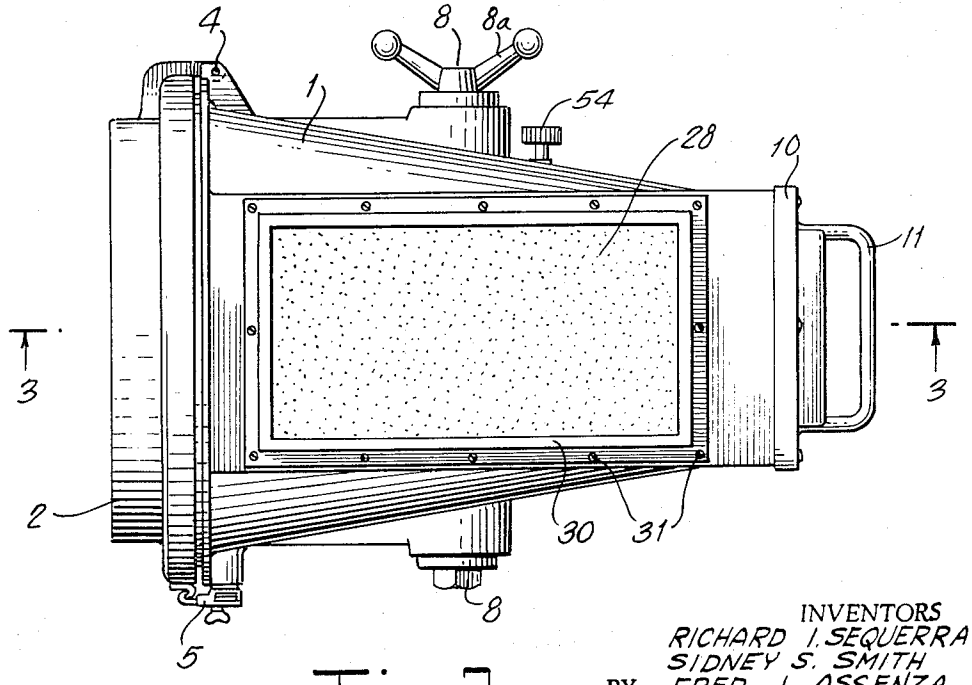

Fig. 2.

INVENTORS
RICHARD I. SEQUERRA
SIDNEY S. SMITH
FRED J. ASSENZA
WILLIAM H. GREENBAUM
BY Lester N. Clark
ATTORNEY

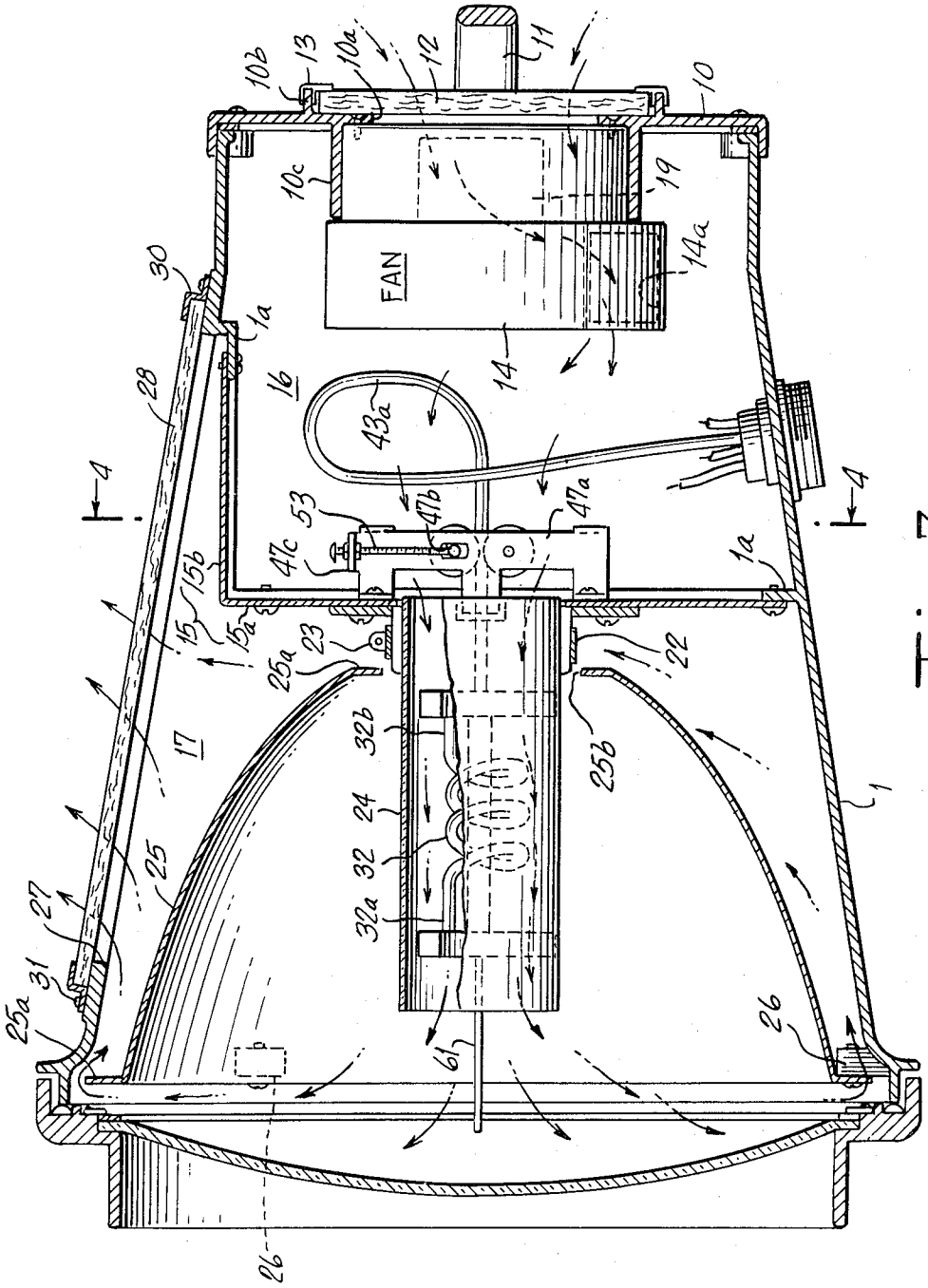

Fig. 3.

Fig. 4.

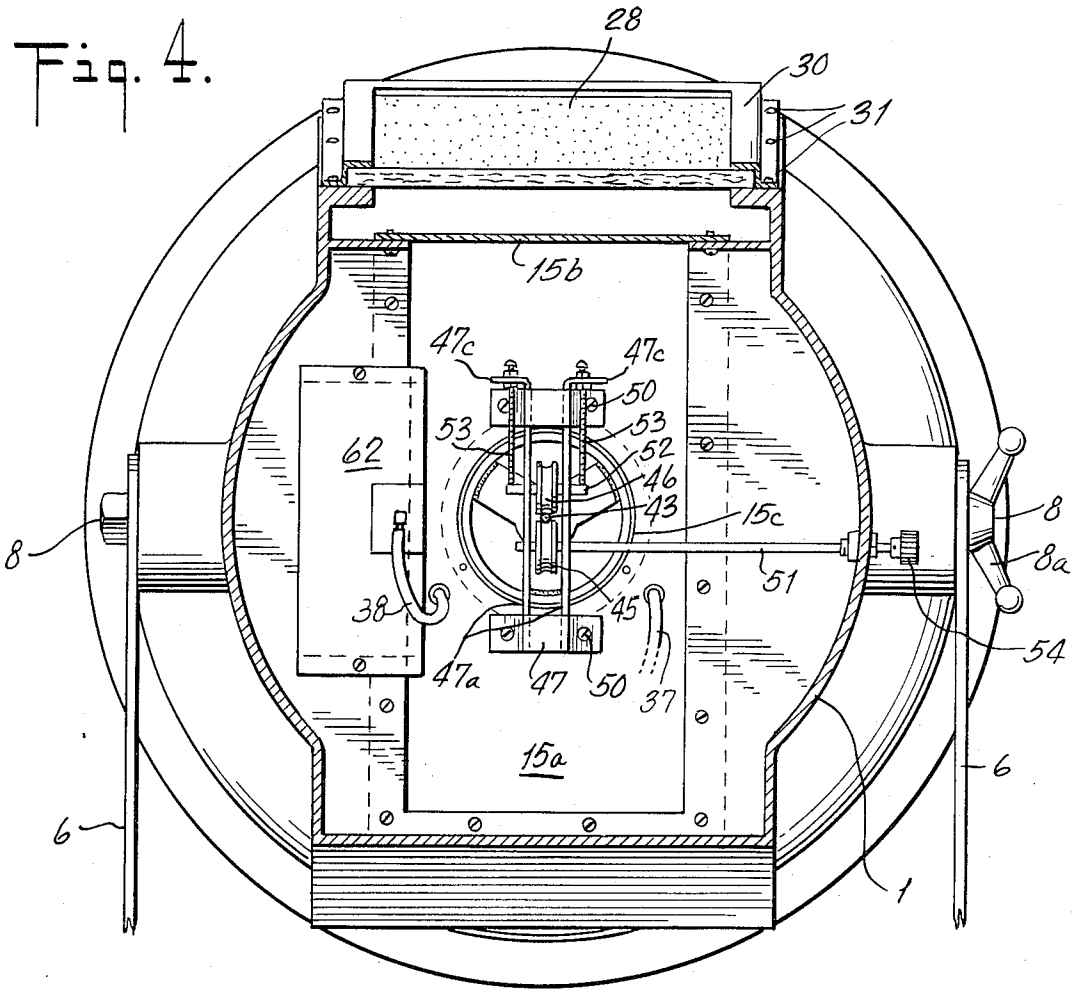
28
30
31
15b
47c
47c
50
53
53
52
46
43
62
15c
8
8a
51
38
45
54
47a
47
50
37
15a
6
6
1

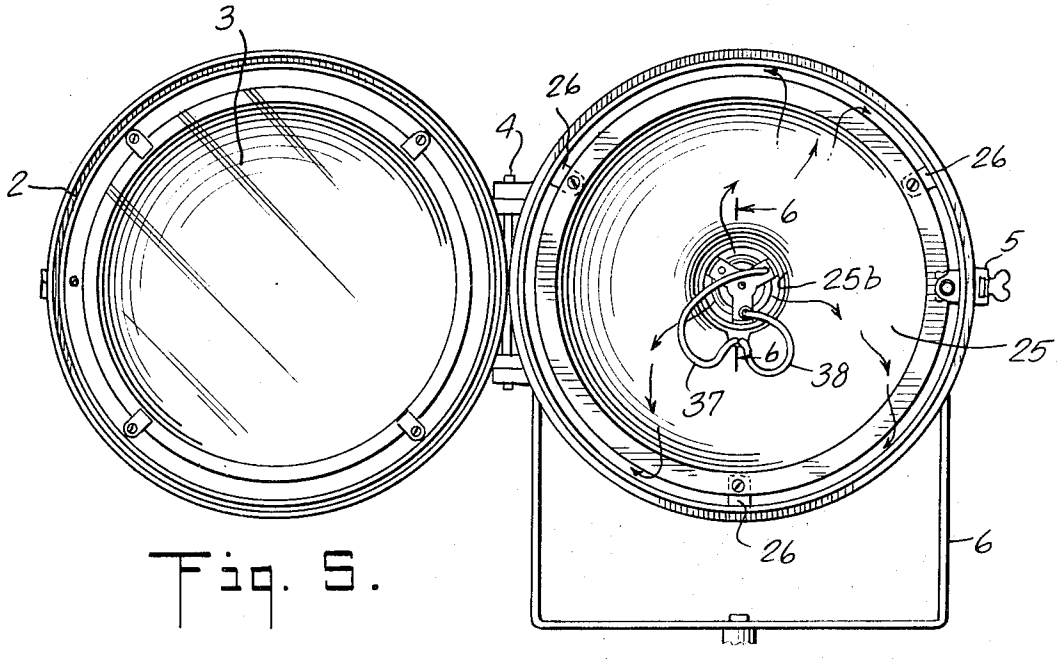
3
26
4
26
2
6
5
25b
25
6
38
37
26
6

Fig. 5.

Fig. 6.

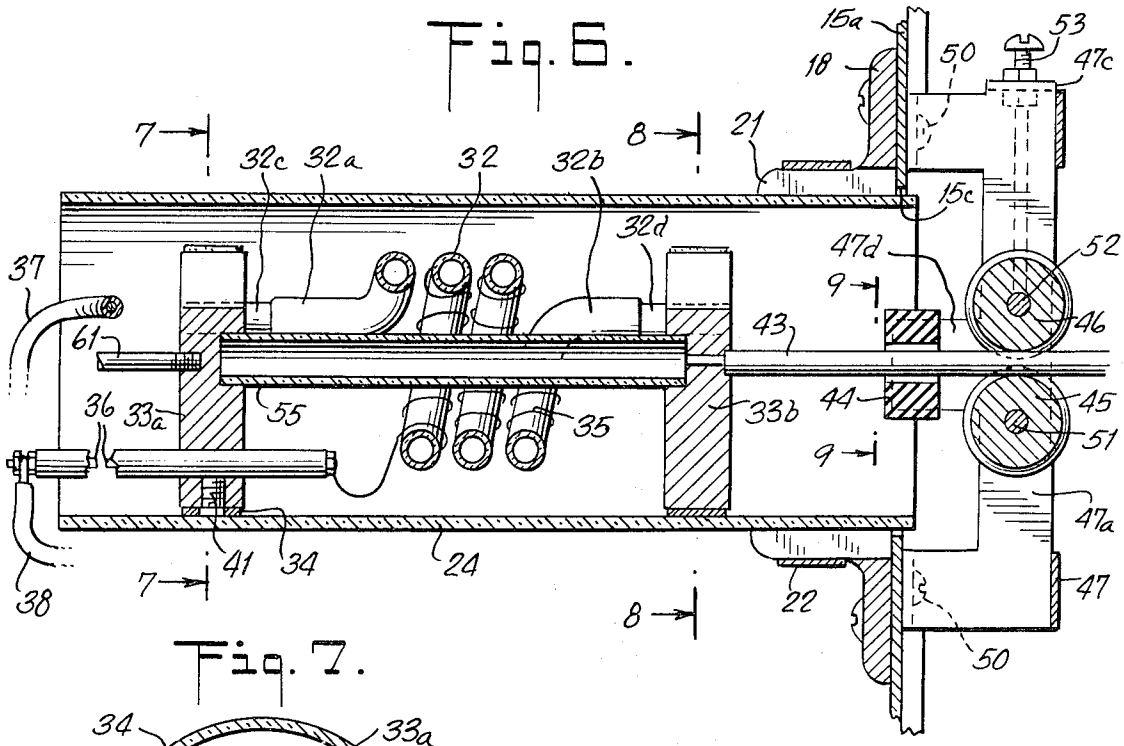

Fig. 7.

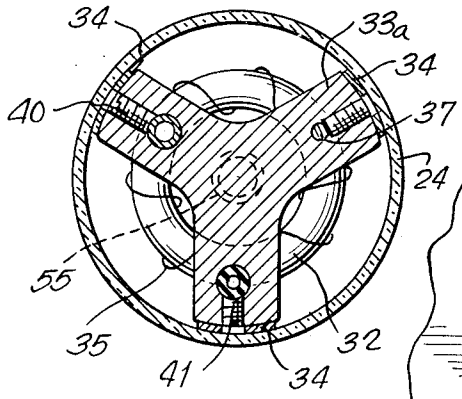

Fig. 8.

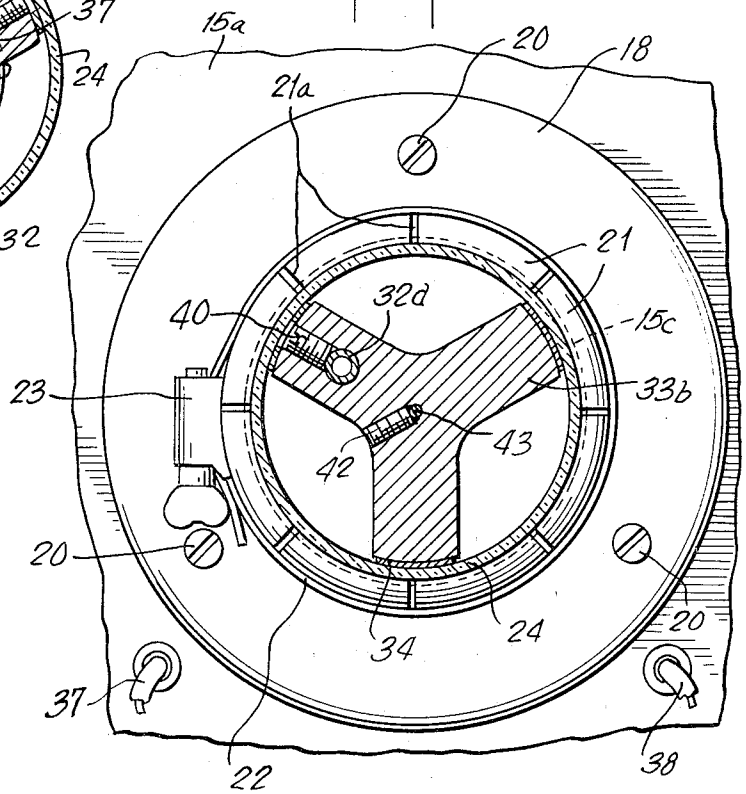

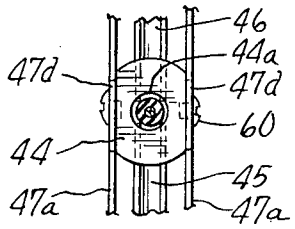

Fig. 9.

ELECTRONIC FLASH LIGHTING SYSTEM

BACKGROUND OF THE INVENTION

Electronic flash tubes are commonly used where brilliant illumination is required for a very short time interval (on the order of microseconds). Such flash tubes are commonly energized by a high voltage capacitor discharge. The average brilliance of the illumination and repetition rate from a given tube is limited by the rate at which heat energy can be successfully dissipated from the tube. This limitation affects both the duration of each individual flash and the number of flashes per second which may be permitted without an adverse effect on the tube structure. Such tubes are commonly used in stroboscopes and in other stop-motion photography television systems.

BRIEF SUMMARY OF THE INVENTION

The present invention is directed to a continuously flashing flash tube lighting system which can produce more brilliant illumination and successfully dissipate the high heat energy which accompanies that brilliant illumination. For example, a flash tube employed in the apparatus of the present invention may have a continuous rating of 1,200 watts average power, and may use higher power for short bursts of flashes. The flash duration may vary from 30 to 60 microseconds.

The flash lighting system of the present invention employs a conventional flash tube of generally helical form having ends extending parallel to the axis of the helix and aligned with the turns of the helix. The lamp is supported at its ends on a pair of heat and electrically conductive spiders which span the interior of a cylinder so that the ends of the legs of the spiders engage the wall of the cylinder, and which also act as electrical connections and heat sinks. The lamp is supported on the spiders radially inwardly from the cylinder wall. A forced draft of fluid such as air is supplied to one end of the cylinder and is discharged from the other end. A core tube restricts air flow in the center of the helix where it will not be used effectively for cooling and directs it at higher velocity closer to the helix. The spiders create turbulence in the fluid stream to enhance cooling of the lamp.

The flash tube assembly, including the spiders and the flash tube, is mounted for movement, axially in the cylinder. The cylinder is made of "Pyrex" or heat resisting glass, and and is mounted coaxially with a reflector so that movement of the flash tube along the cylinder axis changes the focus of the beam produced by the reflector. Such movement is achieved through use of one of the electrical leads to the flash tube.

DRAWINGS

FIG. 1 is a perspective view of the exterior of a flash lighting unit embodying the invention.

FIG. 2 is a plan view of the unit of FIG. 1.

FIG. 3 is a cross-sectional view taken along the line 3—3 of FIG. 2.

FIG. 4 is a cross-sectional view taken along the line 4—4 of FIG. 3.

FIG. 5 is a front view of the unit of FIGS. 1–4, with the cover swung open on its hinges.

FIG. 6 is a fragmentary view on an enlarged scale taken along the line 6—6 of FIG. 5.

FIG. 7 is a cross-sectional view taken along the line 7—7 of FIG. 6.

FIG. 8 is a fragmentary cross-sectional view taken along the line 8—8 of FIG. 6.

FIG. 9 is a fragmentary cross-sectional view taken along the line 9—9 of FIG. 6.

DETAILED DESCRIPTION

The flash unit illustrated is enclosed within a housing 1, provided with a front cover 2 in which a lens 3 is mounted by conventional means. The cover 2 is hinged at 4. A fastener 5 is provided at a point on the cover 2 diametrically opposite the hinge 4. The housing 1 may be provided with an electrical switch (not shown) to ensure that high voltage is cut off when the door is opened. The housing 1 is mounted by a pair of bolts 8 at the top of a yoke 6 supported on the top of a spud 7, which may in turn be supported on a tripod. The housing 1 may be fixed in any angular position by means of one of the bolts 8, which conveniently includes a "-speed handle" 8*a*. The housing 1 is provided with a rear cover 10 held in place by screws and provided with a handle 11. The cover 10 has a central opening 10*a* (FIG. 3) which serves as an air inlet and is covered by a filter pad 12 held in place by clips 13 which engage a flange 10*b* projecting rearwardly from the cover 10.

Another flange 10c projects forwardly from the cover 10 and supports a fan 14 driven by an electric motor 19. The fan sucks air in from the outside through the filter 10 and discharges it into the interior of the housing 1 through a suitable discharge opening 14*a*. The electrical connections for the motor 19 have been omitted from the drawing.

The housing 1 is internally divided by a septum wall 15 into a back compartment 16 and a front compartment 17. The septum wall 15 is mounted on an internal flange 1*a* intergral with the housing 1, and has a vertical portion 15*a* and a horizontal portion 15*b* at its upper end. The vertical portion 15a has a central opening 15*c*. A collar 18, best seen in FIGS. 6 and 8, encircles and overlaps the opening 15*c*. The collar 18 has a flange fastened to the septum wall 15 by means of screws 20, and an integral forwardly projecting neck 21, which is slotted, as shown at 21*a*, to separate the neck 21 into a plurality of forwardly projecting fingers. The flexible band 22 encircles the fingers 21. The ends of the flexible band are connected by a threaded coupling 23, so that the band may be gradually tightened to decrease the inside diameter of the neck defined by the fingers 21. The fingers 21 frictionally grip and support the outside of a guide means 24, which in the embodiment shown is a "Pyrex" or heat resistant glass cylinder. The cylinder 24 projects through the opening 15*c* into the rear compartment 16, and extends forwardly about three-fourths of the way through the front compartment 17.

A reflector 25 is mounted in the front compartment co-axially with the cylinder 24. The reflector 25 has a peripheral flange 25*a* at its front end, by which it is mounted on a plurality of inwardly projecting lugs 26, which may be integral with the housing 1. The outside diameter of the flange 25*a* is smaller than the adjacent inside diameter of the casing 1, so that an air flow space is provided between the periphery of the reflector and the wall of the housing 1. The reflector 25 has a central

aperture 25b, through which the cylinder 24 freely extends.

The upper side of the housing 1 is provided with a discharge opening 27, which is closed by a filter 28 held in place by a frame 30 attached to the top of the housing by means of screws 31.

Thus, it may be seen that the fan 14 produces a flow of air from the outside through the back compartment 16, through the cylinder 24, around the periphery of the reflector 25 and outwardly through the discharge opening 27, as shown by the arrows in FIG. 3. The filter, typically of activated carbon, has the function of trapping any ozone or other noxious gases that may be generated by the trigger wire and flash tube (described below). Another function is to prevent external objects from falling accidentally into the housing 1.

Inside the cylinder 24 is mounted a flash tube or lamp 32, of a generally conventional helical construction, having end portions 32*a*, 32*b* extending parallel to the axis of the flash tube helix and terminating in electrodes 32*c* and 32*d*.

The electrodes 32*c* and 32*d* are respectively in electrical contact with spiders 33*a* and 33*b*, each shown as having three legs. The ends of the legs are close to the inner surface of the cylinder 24 and are separated from that surface by pads 34 of high temperature resistant felt or other suitable shock-absorbing material to keep the spiders 33*a* and 33*b* from scratching or breaking the glass cylinder 24 and to prevent rattle. The tube 32 carries a trigger winding 35 electrically connected to a conducting rod 36 which extends through and is insulated by insulator 36*a* from the front spider 33*a*. Rod 36 is connected at its outer end to a wire 38 which carries trigger voltage (normally 25 kilovolts). The front spider 33*a*, at a point adjacent the front electrode of the flash tube 32 is connected by an insulated wire 37 to a suitable energizing circuit. The wires 37 and 38 extend into the back compartment by means of an aperture in the reflector 25, as best seen in FIG. 5. These wires are long and flexible and can move freely as the flash tube 32 is moved. The ends of the flash tube 32 are held in place in the spiders 33*a* and 33*b* by means of set screws 40 (FIG. 8) Another set screw 41 (FIG. 6) holds the insulator 36*a* in place in the front spider 33*a*.

Another set screw 42 (FIG. 8) attaches the end of a stiffly flexible insulated wire 43 to the middle of the rear spider 33*b*. The wire 43 extends rearwardly from the spider 33*b* through an insulated bushing 44 and thence between a lower insulated roller 45 and an upper insulated roller 46 and into the back compartment 16 where an extra loop 43*a* of the wire 43 is provided.

The rollers 45 and 46 and the bushing 44 are mounted on a yoke 47 having upper and lower ends fastened to the back side of the septum wall 15 by suitable screws 50. The yoke 47 includes a pair of vertically extending parallel bars 47*a*. A shaft 51 extends through the bars 47*a* and is journaled therein. The shaft 51 supports the lower roller 45 in a fixed position between the two bars 47*a*. The upper roller 46 is mounted on a shaft 52 whose ends extend through vertically extending slots 47*b* (best seen in FIG. 3) in the bars 47*a*. The ends of the shaft 52 are engaged by a pair of elongated bolts 53 which are mounted in flanges 47*c* provided at the top of the yoke 47. Lock nuts are provided to set the bolts 53 in any desired position. Thus, the position of the bolts 53 determines the pressure applied by the rollers 45 and 46 to the stiffly flexible wire 43.

The shaft 51 extends out through the side wall of the housing 1, and carries on its outer end a knob 54, by means of which the roller 45 may be driven. Rotation of the knob 54 drives the wire 43 and thereby moves the flash tube assembly including the flash tube 32 and its supporting spiders 33*a* and 33*b* axially of the cylinder 24, thereby changing the focusing of the beam which is projected from the reflector 25 through the lens 3.

A spacer, or core tube 55 (FIG. 6), preferably transparent, e.g., a cylinder of glass, has its ends loosely received in the spiders 33*a* and 33*b*. Soft material may be interspersed between the core tube ends and spiders to prevent rattle. The assembly of core tube and spiders is purposely loose or flexible to permit the normal flexing of the flash lamp during pulsing. The most important function of the core tube or spacer is to direct the air stream passing through the cylinder 24 into a region closely adjacent the turns of the helical flash tube 32. As best seen in FIG. 7, the radial distance between the outer surface of the spacer 55 and the radially inner surface of the helix of the flash tube 32 is substantially equal to the radial distance between the outer surface of the flash tube 32 and the inside surface of the cylinder 24. Thus, all of the air passing through the cylinder 24 is forced to pass close to the flash tube 32, so that its heat transfer capacity is fully utilized. The spiders create turbulence in the air flow, which enhances cooling.

A forwardly extending projection 47*b* is provided adjacent the middle of each bar 47*a*. The bushing 44 of insulating material is supported between the ends of the projections 47*d* as shown in FIG. 9, by means of screws 60. The bushing 44 is provided with a central opening 44*a* through which the wire 43 moves. The bushing 44 serves to prevent the flexible wire 43 from buckling in the reach between the rollers 45, 46 and the rear spider 33*b*.

Threadedly mounted on the front side of the front spider 33*a* is a rod 61 which extends forwardly out through the open front end of the cylinder 24. The purpose of the rod 61 is to serve as a limit stop to prevent the flash tube assembly from being moved too far forward by actuation of the knob 54, and thereby prevent the flash tube assembly from moving outside the cylinder.

The wire 43 serves as one power supply terminal for the flash tube 32. The pulse supply system for the trigger winding 35 may be mounted in a unit 62 shown in FIG. 4 and supported on the back of the septum wall 15.

We claim:

1. Lighting apparatus, comprising:

a. lamp means spaced radially from an axis and distributed peripherally about said axis;

b. hollow guide means open at its ends and encircling said lamp means, said guide means extending along said axis;

c. support means for the lamp means, said support means being received in and supported by the guide means, said support means and said guide means accommodating a flow of cooling fluid

between the lamp means and the guide means and also between the lamp means and the axis; and

d. means for circulating a cooling fluid through the guide means, including:

1. means for supplying cooling fluid to one end of the guide means;

2. means for discharging the cooling fluid from the other end of the guide means.

2. Lighting apparatus as defined in claim 1, in which:

a. said lamp means is in the form of a helical tube;

b. said support means comprises a pair of supports, one for each end of the helical tube;

c. each of the supports comprises a spider having a plurality of legs; and

d. each end of the lamp is supported in one of the legs of a spider at a locality radially spaced from said axis.

3. Lighting apparatus as defined in claim 2, in which said guide means includes:

a. a transparent cylinder encircling said lamp means and supporting said spiders; and

b. shock absorbing pads between the ends of the legs of the spiders and the wall of the cylinder.

4. Lighting apparatus as defined in claim 2, including a spacer attached at its ends to the centers of the spiders and extending between them, said spacer cooperating with the walls of the cylinder to confine the cooling fluid flow to a region closely adjacent the helical tube lamp.

5. Lighting apparatus, comprising:

a. a housing having a light emitting opening;

b. a lens mounted on said housing in said opening;

c. a reflector within the housing and having a central opening;

d. a lamp;

e. hollow transparent guide means open at its ends and encircling the lamp;

f. a pair of supports for the ends of the lamp, said supports being received in the guide means and being apertured to accommodate a flow of fluid through the guide means, said supports holding the lamp within the guide means and spaced from the walls thereof;

g. a septum wall within the housing and dividing the housing into back and front compartments;

h. means on the septum wall supporting the guide means, said guide means extending through the septum wall and through the central opening of the reflector;

i. means supporting the reflector behind the lens and providing a fluid flow path past the periphery of the reflector;

j. a fluid intake in one of the compartments;

k. a fluid outlet in the other compartments; and

l. means for circulating fluid through said compartments and said guide means.

6. Lighting apparatus as defined in claim 5, in which said fluid intake is located at the back of the back compartment.

7. Lighting apparatus as defined in claim 6, including filter means in said fluid intake.

8. Lighting apparatus as defined in claim 5, in which said fluid outlet is at the top of the housing.

9. Lighting apparatus as defined in claim 8, including a filter covering said fluid outlet.

10. Lighting apparatus as defined in claim 5, in which said circulating means is an impeller mounted inside the fluid intake.

11. Lighting apparatus as defined in claim 5, including focusing means to move the lamp within the guide means so as to change its position with respect to the reflector.

12. Lighting apparatus as defined in claim 11, in which said focusing means includes:

a. means to drive the rearmost support along the guide means; and

b. means extending outside the housing for actuating the drive means.

13. Lighting apparatus including:

a. a housing having a light emitting opening;

b. a lens mounted on the housing in said opening;

c. a reflector having a central opening;

d. an elongated lamp;

e. hollow transparent guide means open at its ends and encircling the lamp;

f. a pair of supports for the ends of the lamp, said supports being received in and supported by the guide means;

g. means supporting the guide means with its front end projecting through the central opening in the reflector;

h. focusing means for moving the lamp along the guide means to change its position with respect to the focus of the reflector; and

i. drive means for said focusing means extending outwardly through a wall of the housing.

14. Lighting apparatus as defined in claim 13, in which:

a. said focusing means comprises:

1. a stiffly flexible elongated element attached to one of said supports;

2. a pair of opposed rollers frictionally engaging the elongated element; and

3. guide means for the elongated element between the rollers and said one support; and

b. said drive means comprises a motion transmitting element extending from one of said rollers through a wall of the housing.

15. Lighting apparatus as defined in claim 14, in which:

a. said one roller rotates about a fixed axis, and

b. the other of said rollers rotates about an axis which is adjustable to vary the friction grip of said rollers on said elongated element.

16. Lighting apparatus as defined in claim 14, in which said elongated element is an insulated wire and serves as one of the power supply lines for the lamp.

17. Lighting apparatus including:

a. an electric lamp;

b. an optical system for distributing light from the lamp;

c. means for supporting the lamp;

d. means for supplying electrical energy to the lamp including a stiffly flexible insulated conductor; and

e. means for moving the lamp with respect to the optical system, to vary the distribution of light from the lamp, said moving means comprising:

1. said conductor;

2. a mechanical connection between an end of the conductor and the lamp so that said end and the lamp move concurrently;

3. a fixed support; and
4. means spaced from said end for moving the conductor with respect to said support, so that the lamp is driven by movement of the conductor.

* * * * *