C. P. BOSSERT.

WEB REGULATING MECHANISM.

APPLICATION FILED APR. 1, 1918.

1,360,717. **Patented Nov. 30, 1920.**

3 SHEETS—SHEET 1.

Fig. 1.

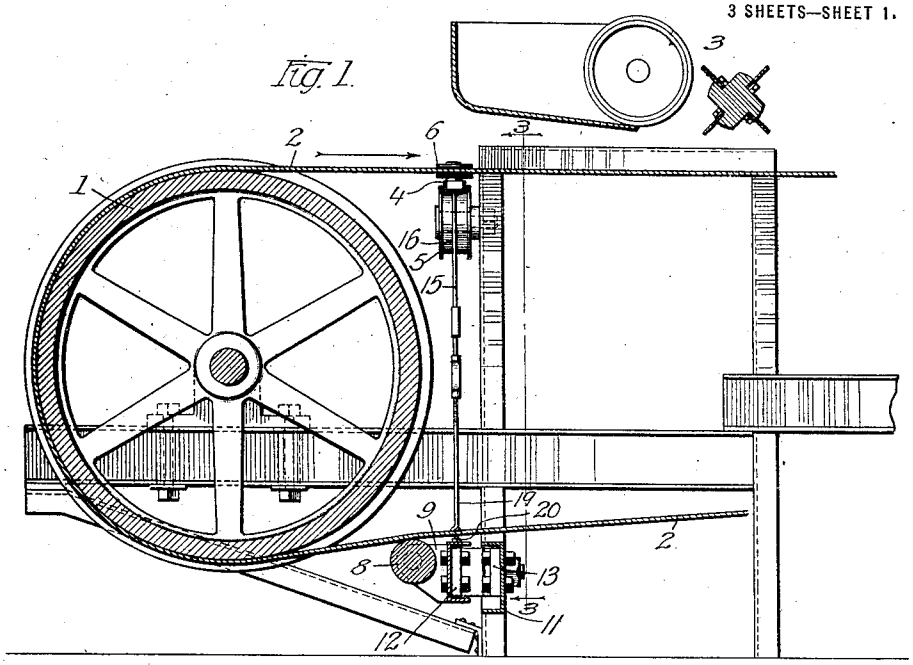

Fig. 2.

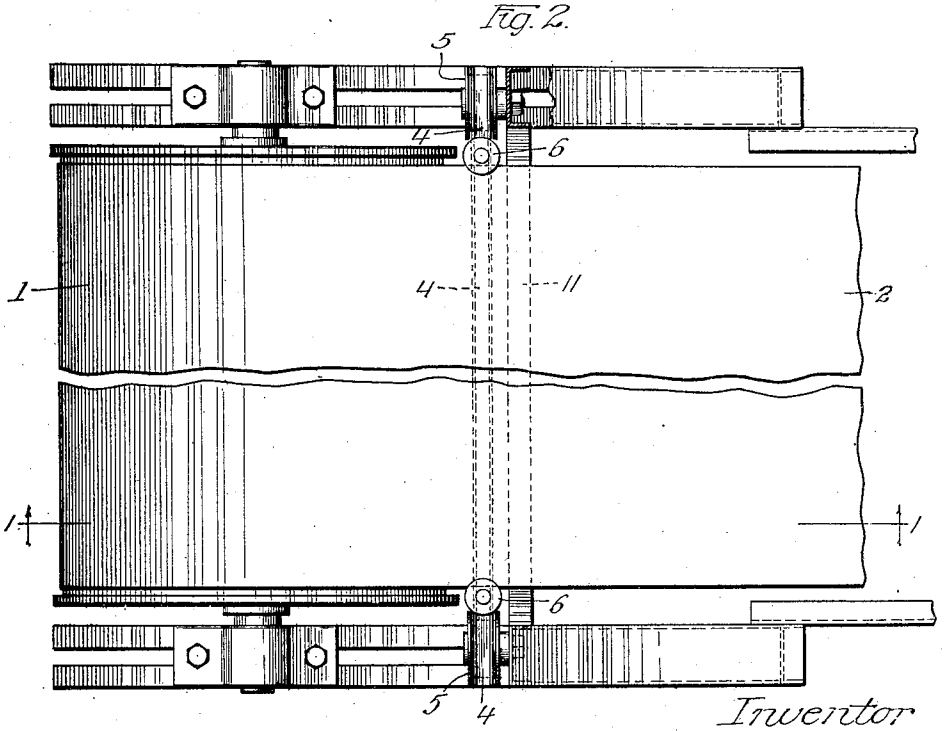

Inventor

Charles P. Bossert

By Edwin B. H. Towers Jr. Atty.

C. P. BOSSERT.

WEB REGULATING MECHANISM.

APPLICATION FILED APR. 1, 1918.

1,360,717.

Patented Nov. 30, 1920.

3 SHEETS—SHEET 2.

Fig. 3.

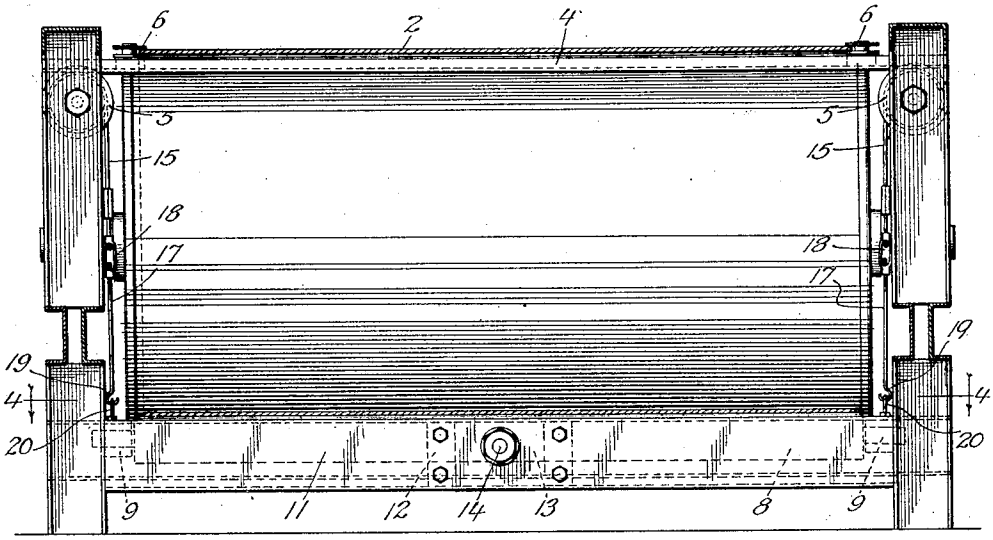

Fig. 4.

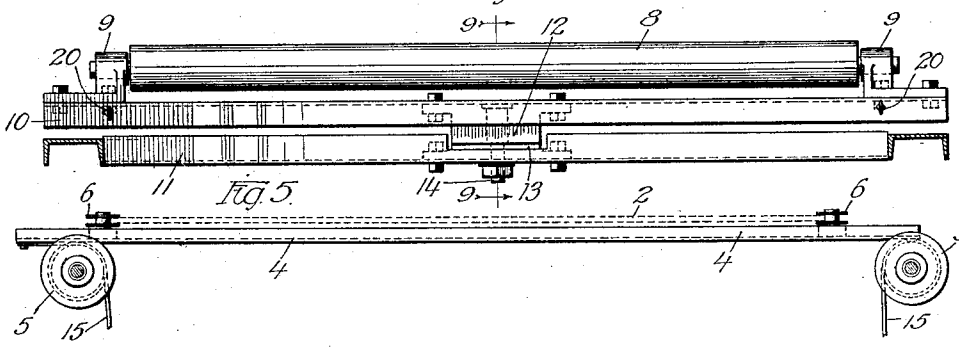

Fig. 5.

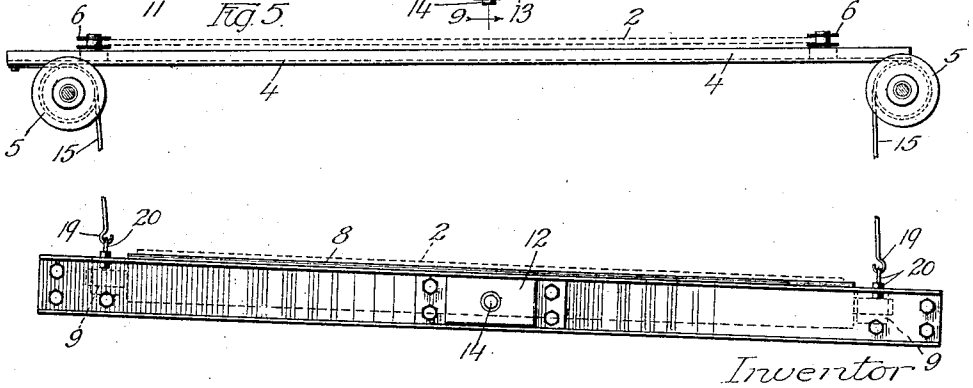

Inventor

Charles P. Bossert

By Edwin B. H. Tower Jr.

Attiy.

C. P. BOSSERT.

WEB REGULATING MECHANISM.

APPLICATION FILED APR. 1, 1918.

1,360,717. **Patented Nov. 30, 1920.**

3 SHEETS—SHEET 3.

Fig. 6.

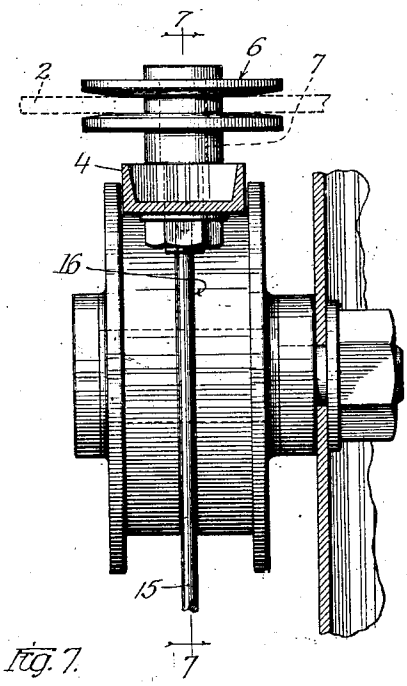

Fig. 8.

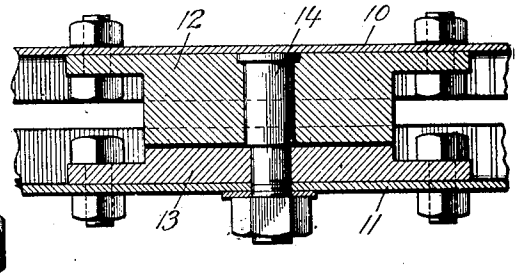

Fig. 7.

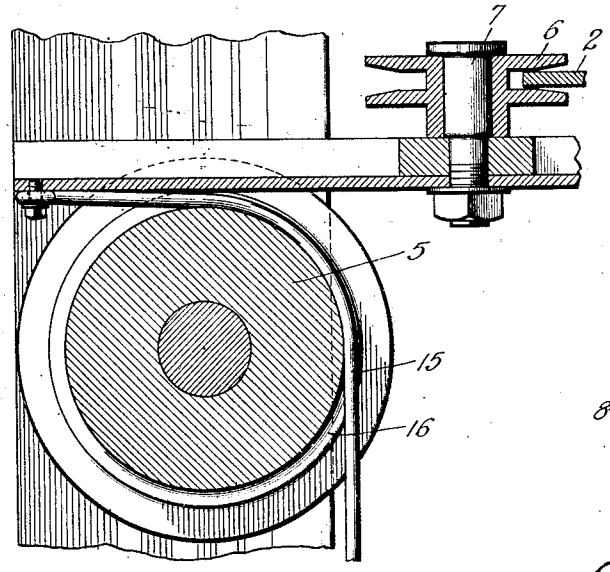

Fig. 9.

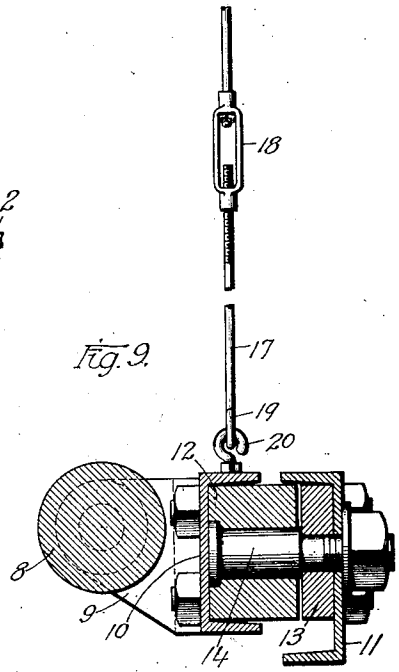

Inventor

Charles P. Bossert

By Edwin B. H. Tower Jr.

Atty.

UNITED STATES PATENT OFFICE.

CHARLES P. BOSSERT, OF MILWAUKEE, WISCONSIN.

WEB-REGULATING MECHANISM.

1,360,717. Specification of Letters Patent. Patented Nov. 30, 1920.

Application filed April 1, 1918. Serial No. 226,062.

To all whom it may concern:

Be it known that I, CHARLES P. BOSSERT, a citizen of the United States, residing at Milwaukee, in the county of Milwaukee and State of Wisconsin, have invented new and useful Improvements in Web-Regulating Mechanism, of which the following is a specification.

This invention relates to web controlling or regulating mechanism of the type which is employed to prevent a web from deviating laterally from a predetermined path of travel.

Mechanism of this type is used in many relations. For instance, various devices are in use for causing the web in a printing press to travel in a predetermined path. As soon as the web deviates laterally from its predetermined path it is shifted back to its normal path of travel.

The present web controlling mechanism may be used wherever it is desirable to prevent material deviations of the web from its normal path of travel, but it is particularly adapted for controlling webs of a relatively thick and heavy character. Such a web may be a belt passing over a pulley, and it may be desirable to control the lateral movement of the belt so that it will not materially depart from a predetermined path of travel and thereby run off of the pulley.

The web controlling mechanism to be hereinafter described was designed particularly for use on a machine for treating hides or skins, and the mechanism is intended to keep the endless belt of such a machine in alinement with the rollers over which the belt passes, so that it will not run off of the rollers. As will hereinafter be seen, however, the invention is not limited to this particular use, but may be used in various other relations.

One object of the invention is to provide improved mechanism for preventing material lateral deviations of a web from a predetermined path of travel.

Another object is to provide web controlling mechanism of the above character which is entirely mechanical in its construction.

Another object is to make the web controlling mechanism rugged and durable in construction so that it will be capable of adjusting or controlling webs of a relatively thick and heavy nature.

Another object is to provide a web controlling mechanism having means actuated by lateral movements of the web and directly responsive to slight deviations of the web from its normal path of travel which means acts on the web to tension one or the other edge of the same to cause the web to creep back to its normal position on the roller or pulley over which it passes.

Other objects and advantages will hereinafter appear.

One embodiment of the invention is illustrated in the accompanying drawings. The views of the drawings are as follows:

Figure 1 is a vertical longitudinal section on line 1—1 of Fig. 2, showing a portion of a hide treating machine having the improved web controlling mechanism applied thereto.

Fig. 2 is a top plan of the structure shown in Fig. 1 certain parts being omitted.

Fig. 3 is a vertical longitudinal section on line 3—3 of Fig. 1.

Fig. 4 is a horizontal section on line 4—4 of Fig. 3.

Fig. 5 is an end elevation of the web controlling mechanism showing in an exaggerated manner the position which the parts assume when the web tends to deviate from its normal path of travel.

Fig. 6 is a side elevation of an enlarged portion of the web controlling mechanism.

Fig. 7 is a vertical section on line 7—7 of Fig. 6.

Fig. 8 is a horizontal section through the pivotal support for the channel bars.

Fig. 9 is a vertical section on line 9—9 of Fig. 4.

The invention may take different forms, but for the sake of illustration one embodiment of the invention will be specifically described.

The web controlling mechanism comprises in general a member which acts directly on a portion of the web to tilt the same transversely, and a second member associated with another portion of the web adapted to be moved or shifted by lateral deviations of the web from its normal path of travel. Connections are provided between the two members whereby when the web tends to deviate from its normal path of travel the first named member tilts the web to guide it back to its normal path of travel.

In the present instance, the controlling mechanism is shown in combination with a

web or belt of the endless type, and the member which is actuated by the lateral deviations of the web is associated with the upper run of the web. The member which acts upon the web to tilt the same transversely is in the form of a tiltable roller passing transversely under the lower run of the web. It is obvious that when this roller is tilted in a vertical plane, as for instance when the upper run of the web deviates from its normal path of travel, the web will be guided back to its predetermined path of movement.

As above stated, the invention is illustrated as applied to a machine for treating hides and skins. A detail description of the machine itself is not necessary for an understanding of the present invention. It should be noted, however, that the machine comprises a roller or pulley 1 over which an endless belt 2 passes. The hides or skins to be treated are placed upon the upper run of the endless belt 2, and are passed under the mechanism denoted generally at 3. This mechanism serves to distribute upon the surface of the hide a so-called "sulfid compound" which facilitates the subsequent removal of the hair from the hide or skin. The rear end of the machine is not illustrated in the drawing as it is not necessary for an understanding of the invention.

The web controlling mechanism to be hereinafter described prevents material lateral deviations of the web 2 such as might cause the belt to run off the roller 1 or the roller at the rear end of the machine which is not illustrated. Furthermore, it causes the upper run of the belt to remain in an exact predetermined path of travel under the mechanism 3. The web controlling mechanism will now be described. It comprises a channel bar 4 which passes transversely under the upper run of the web. This bar is mounted so that it is capable of movement longitudinally of itself and transversely of the web. This is accomplished by supporting each end of the bar 4 on flanged rollers 5, one of each being located on each side of the machine. Two flanged rollers 6 are mounted upon the upper portion of the bar 4. These rollers are mounted on vertical pins 7 carried by the movable bar 4. (See Figs. 6 and 7). The rollers 6 are spaced apart a distance which is substantially equal to the width of the web, and the edges of the web pass between the flanges on the rollers as best shown in Fig. 3. It will now be obvious that when the upper run of the web 2 deviates laterally from its normal path of travel, the channel bar 4 will be moved longitudinally on the rollers 5. This movement of the channel bar 4 is utilized to direct the web back to its normal path of travel, as will hereinafter appear.

A roller 8 passes transversely beneath the lower run of the web 2. As best shown in Fig. 4 it is mounted in brackets 9, which are secured to the ends of the channel bar 10. The channel bar 10 is pivoted intermediate its ends to a stationary channel bar 11 which passes transversely across the lower portion of the framework of the machine. The pivotal connection between the channel bars 10 and 11 may be of any appropriate type, but is preferably constructed in the manner shown in Figs. 8 and 9. A filler block 12 is bolted in the channel of the channel bar 10 and a corresponding filler block 13 is bolted in the channel of the channel bar 11. The adjacent faces of these two filler blocks bear against each other, and constitute the pivotal bearing surface for the two channel bars. The pivotal connection between the two bars is established by the pin 14 which passes through the filler blocks 12 and 13. It will now be seen that the channel bar 10 together with the roller 8 mounted thereon is capable of tilting in a vertical plane about the axis of the pin 14. When the roller 8 is so tilted, it tilts or cants the lower run of the web out of its normal plane.

The tilting of the roller 8 is accomplished by the longitudinal movement of the bar 4 by the following connections: A cord or cable 15 is secured to the under side of each end of the channel bar 4 as shown in Figs. 3 and 4, and as more clearly shown by the enlarged view in Fig. 7. The cable 15 which is secured to the left hand end of the bar 4 passes inwardly over the left hand roller 5 and the cable 15 which is secured to the right hand end of the channel bar 4 passes inwardly over the right hand roller 5. Each cable 15 runs in a groove or recess 16 provided in the corresponding roller 5.

One of the cables 15 is secured to one end of the channel bar 10, and the other cable is secured to the other end of the channel bar. In order to facilitate this connection, and in order to make the lengths of the cables adjustable to take up slack, and to adjust the position of the roller 8, the lower end of each cable is secured to a rod 17 by a turn-buckle 18, as best shown in Figs. 3 and 9. The lower end of the rod 17 is hook-shaped as shown at 19, and engages a corresponding hook 20 attached to the channel bar 10.

It will now be seen that when the upper run of the web deviates laterally from its normal or predetermined path of travel, the channel bar is shifted longitudinally on the rollers 5. When the channel bar 4 is so shifted it will raise one of the cables 15 and will lower the other. This action is exemplified in Fig. 5 which shows the channel bar 4 shifted to the left. The left hand cable 15 is therefore drawn upward over the corresponding roller 5 and the right hand

cable 15 is lowered a corresponding amount. This obviously results in a shifting of the roller 8 about its pivotal connection to the position shown in Fig. 5. The result of tilting the roller 8 is to cant the lower run of the web 2, which action places one or the other of the edges of the web under greater tension and thus causes the web to creep on the roller 1 in such direction that it is brought to its normal position. Therefore, when the upper run of the web deviates laterally in either direction, the roller 8 is tilted in the proper direction to guide the web back to its normal path of travel.

The mechanism is purely mechanical throughout, and is very rugged in its character. It is capable of controlling or regulating webs or belts of a relatively heavy or clumsy nature such as that which is required in a machine of the type herein described. It is obvious, however, that the same principle may be applied to the adjustment of practically any moving web.

Although the invention has been described in connection with an endless belt wherein lateral departures of the upper run of the belt tilts the lower run, it is obvious that the web or belt need not be an endless one, and furthermore, any two portions of the web may be utilized to produce the above results.

In the type of machine herein described the web controlling mechanism causes the belt to stay on the rollers over which it passes, and causes it to pass in a predetermined path of travel under the mechanism 3. However, it will be obvious, that the present invention may be used wherever it is desirable to have a web at one or more particular places run in an exact predetermined path of travel. To accomplish this, the part of the mechanism which is actuated directly by the lateral departures of the web from its predetermined path of travel is positioned in the vicinity of the place where it is desired to have the web run accurately and true. This part of the mechanism may be made to act upon the remaining portion of the mechanism located at any other point where it will accomplish its purpose.

What I claim is:

1. In a web regulating mechanism the combination with a web and the roller over which the web passes, of means in advance of the roller for raising one side or another of the web out of the normal plane of the web, and means including a flexible member laterally movable with the web as the web deviates from its normal path of travel for actuating the first named means.

2. A web regulating mechanism having means for tensioning one side or another of the web, the said means including a flexible element and a guide movable in a plane substantially normal to the web to tilt the same, and means laterally movable with the web as the web deviates from its normal path of travel for actuating the first named means.

3. A web regulating mechanism having means for tensioning one side or another of the web by raising a part of the web above the normal plane thereof, means laterally movable with the web as the web deviates from its normal path of travel, and means whereby the tensioning means is actuated by the lateral movements of the second named means.

4. In a web controlling mechanism the combination of means for tilting the web out of its normal plane, and means including a flexible element actuated by and laterally movable with the web as the web deviates from its normal path of travel for actuating the first named means.

5. In a web controlling mechanism the combination of means including a flexible connection actuated by and laterally movable with the web as the web deviates from its normal path of travel, a rockable member for pressing one edge or another of the web in a plane normal to the web out of its normal plane of travel, and means between the laterally movable means and the rockable member to cause a rocking of said member proportional to the extent of movement of said means.

6. In a web regulating mechanism the combination of means engaging and movable with the web transversely of the path of the web as the web deviates from its normal path of travel, means for engaging the web at another point of its travel and rockable in a plane substantially at right angles to the plane of the web, and means between the first and second named means whereby the second named means is actuated by the transverse movement of the first named means.

7. The combination with a web having an upper and a lower run, of a bar passing transversely under the upper run of the web, means whereby the bar may be shifted longitudinally when the web deviates laterally from a predetermined path of travel, a tiltable roller mounted under the lower run of the web, and means including positive connections between the bar and said roller whereby the latter is tilted when the upper run of the web deviates from its normal path of travel.

8. The combination with a web having an upper and a lower run, of a bar passing transversely under the upper run of the web, means whereby lateral deviations of the upper run of the web from a predetermined path of travel will shift the bar longitudinally, a tiltable roller mounted under the lower run of the web and means including a flexible connection between each end

of the bar and the corresponding end of said tiltable roller to tilt the roller by the shifting movement of the bar.

9. Web regulating mechanism comprising a bar passing transversely under one portion of the web, a pair of rollers upon which the bar is mounted, means whereby said bar is moved longitudinally on the rollers when the web deviates laterally from a predetermined path of travel, a tiltable roller mounted under another portion of the web, and means including a flexible connection between each end of the bar and the corresponding end of said tiltable roller to tilt the roller by the movement of the bar.

10. Web regulating mechanism comprising a bar passing transversely under one portion of the web, a pair of rollers upon which the bar is mounted, means whereby said bar is moved longitudinally on the rollers when the web deviates laterally from a predetermined path of travel, a tiltable roller mounted under another portion of the web, and a flexible member connected to each end of the roller and to the corresponding end of said bar, the flexible members passing over the rollers which support said bar.

11. Web regulating mechanism comprising a bar passing transversely under one portion of the web, rollers carried directly by the bar adapted to be engaged by the edges of the web whereby lateral deviations of the web from a predetermined path of travel will move the bar longitudinally, a roller mounted adjacent to another portion of the web and rockable in a plane perpendicular to the web, and means whereby movements of the bar are transmitted to the tiltable roller to tilt the same and thereby the web.

12. Web regulating mechanism comprising a member adapted to be shifted in a direction transversely of the web by lateral movements of one portion of the web, a roller mounted adjacent to another portion of the web rockable in a plane perpendicular to the web and extending transversely across the same, and means including connections between said member and the roller whereby said roller will be tilted an amount corresponding with the amount of movement of the member.

13. Web regulating mechanism comprising a roller mounted adjacent to one portion of the web and extending transversely across the same, the roller being pivotally mounted intermediate its ends upon an axis substantially parallel to the web, and means responsive to lateral movements of another portion of the web to tilt the roller for the purpose described.

14. Web regulating mechanism comprising a member passing transversely across one portion of the web, a roller passing transversely across another portion of the web, said roller being pivotally mounted intermediate its ends upon an axis substantially parallel to the web, and means including connections between the member and the ends of said roller whereby the latter is tilted when the first named portion of the web deviates laterally from its normal path of travel.

15. Web regulating mechanism comprising a member at one point in the travel of the web mounted for shifting movements in a direction transversely of the travel of the web by lateral movements of the web at that point, means associated with the web at another point in its travel for tilting one side of the web so as to lie at an angle to and out of its normal plane, and means including a flexible element forming a positive connection between the member and said first named means whereby the first named means is tilted by the transverse movements of said member.

16. Web regulating mechanism comprising a member adapted to be shifted in a direction transversely of the web by lateral movements of one portion of the web, means to increase the tension at one side or another of another portion of the web, and means including a flexible element positively connecting the first named member and the means whereby lateral deviations of the first named portion of the web from a predetermined path of travel will operate the first named means and thereby restore the web to its normal path of travel.

In witness whereof, I have hereunto subscribed my name.

CHARLES P. BOSSERT.