Sept. 13, 1932. G. W. STEDWELL 1,876,784

LIQUID DISPENSING

Filed May 14, 1929 3 Sheets-Sheet 1

Fig. 1.

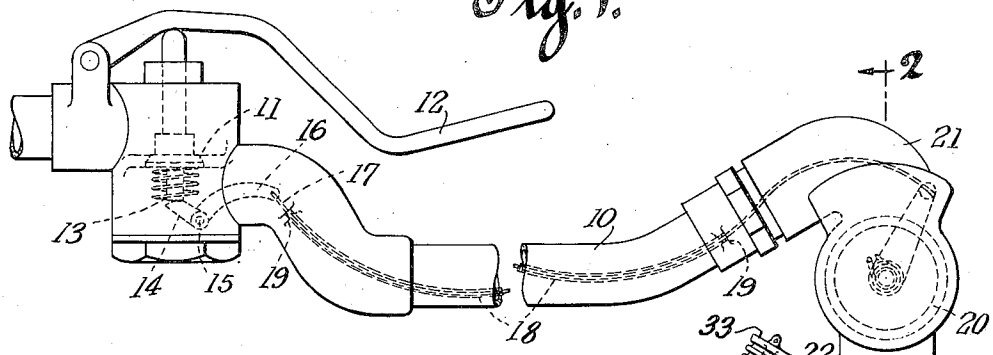

Fig. 3.

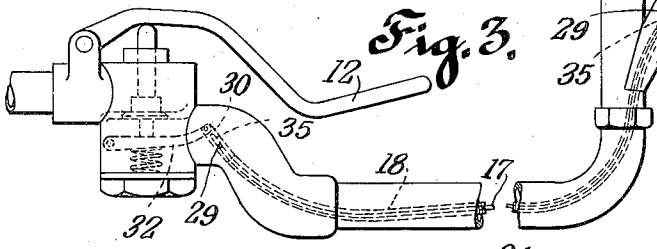

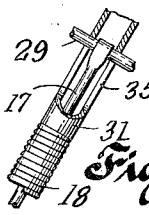

Fig. 3a.

Fig. 2.

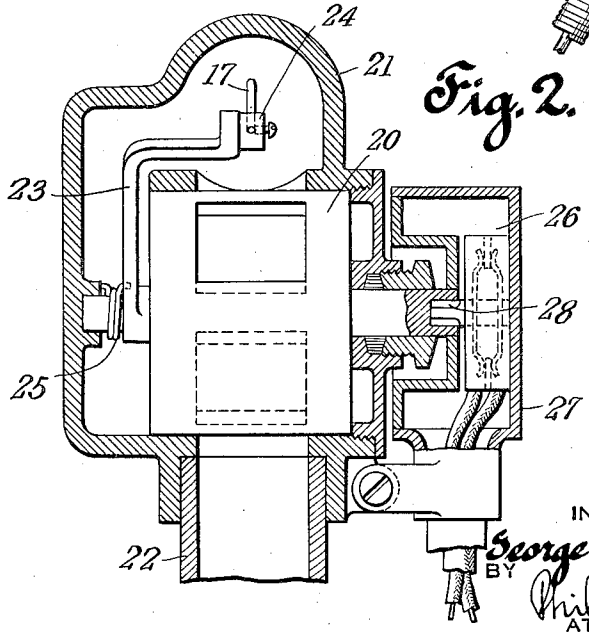

INVENTOR
George W. Stedwell
BY
Philip S. McLean.
ATTORNEY

Sept. 13, 1932. G. W. STEDWELL 1,876,784

LIQUID DISPENSING

Filed May 14, 1929 3 Sheets-Sheet 2

Fig. 4.

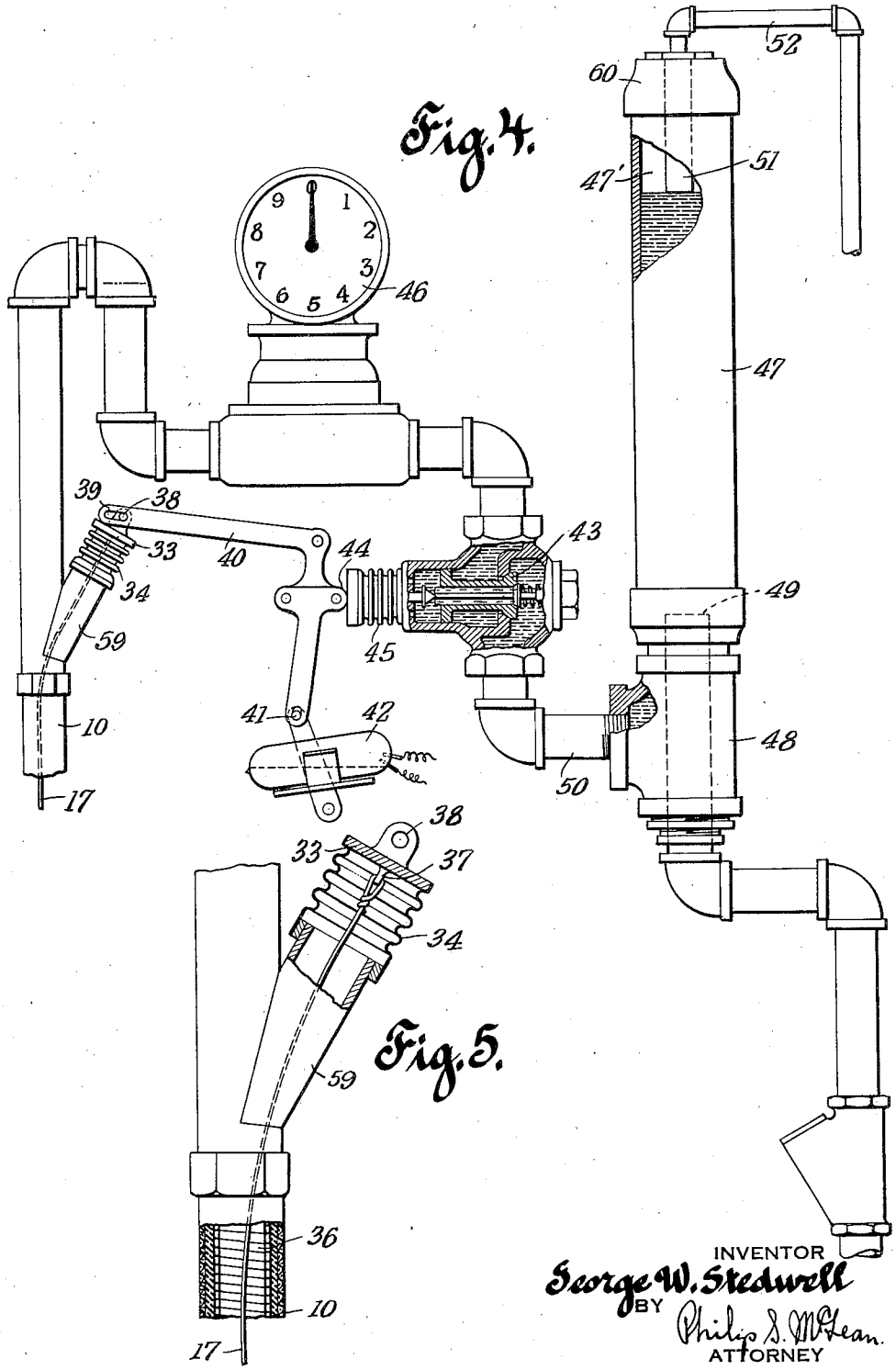

Fig. 5.

INVENTOR
George W. Stedwell
BY
Philip S. McLean.
ATTORNEY

Sept. 13, 1932. G. W. STEDWELL 1,876,784

LIQUID DISPENSING

Filed May 14, 1929 3 Sheets-Sheet 3

Fig. 6.

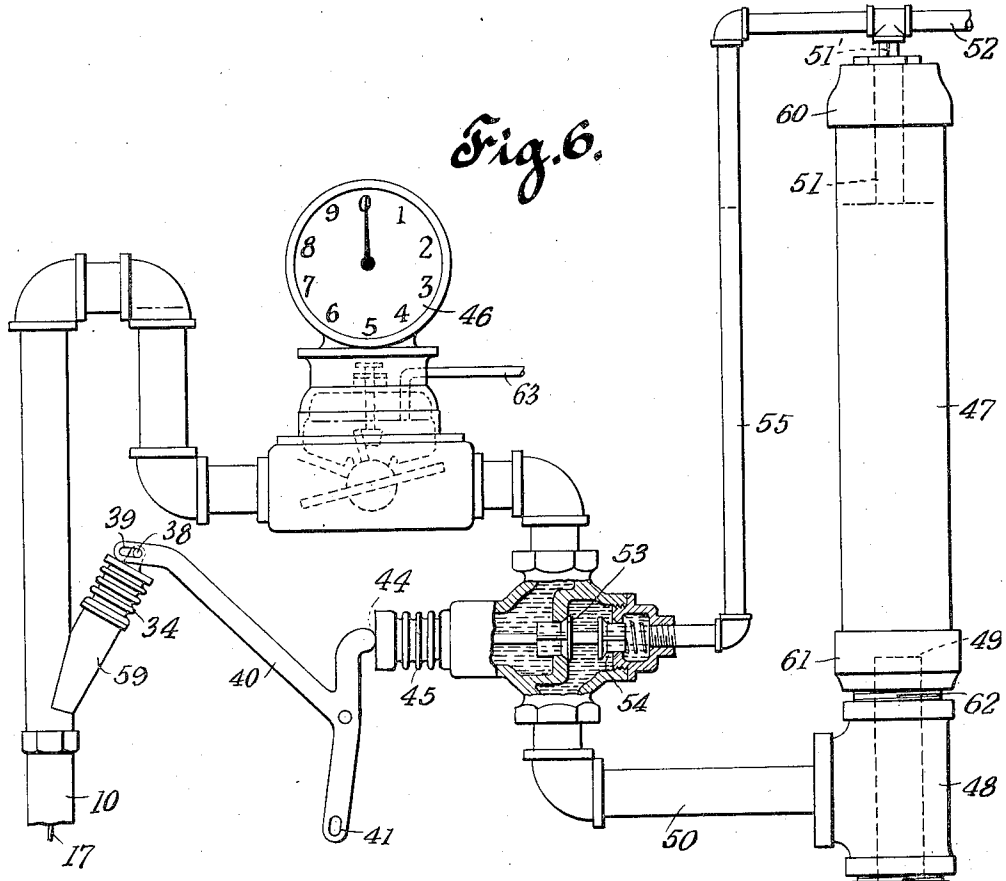

Fig. 7.

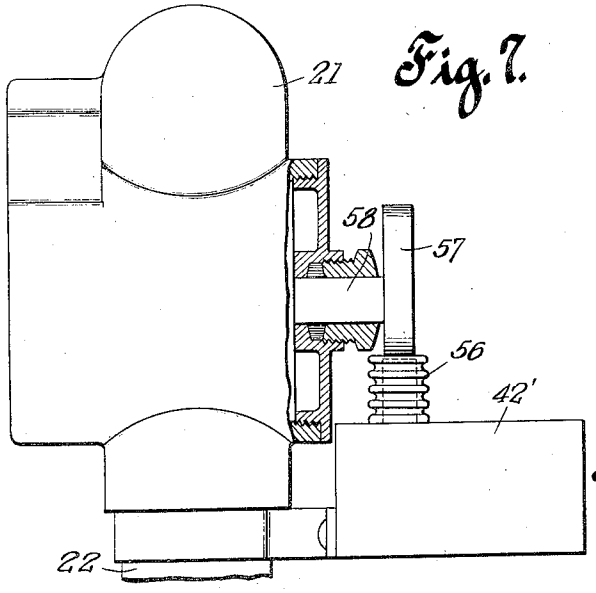

INVENTOR
George W. Stedwell
BY Philip S. McJean
ATTORNEY

Patented Sept. 13, 1932 1,876,784

UNITED STATES PATENT OFFICE

GEORGE W. STEDWELL, OF BROOKLYN, NEW YORK, ASSIGNOR TO SHERWELL CONTROLS, INC., OF NEW YORK, N. Y., A CORPORATION OF NEW YORK

LIQUID DISPENSING

Application filed May 14, 1929. Serial No. 362,949.

This invention relates particularly though not exclusively, to the delivery and dispensing of liquids such as gasolene and the like and as to certain features is a continuation in part of patent application Ser. No. 323,411, Pat. 1,713,102.

The objects of the invention are to provide simple, positive and easily operable mechanism for definitely and accurately controlling delivery of the liquid in various desired quantities; to enable such control to be effected from the discharge end of the apparatus and to deliver the liquid free of gas or entrained air.

These objects are attained in the present invention, by certain novel features of construction, combinations and relations of parts as hereinafter described and illustrated in the accompanying drawings.

The drawings forming part of this specification are primarily for purposes of disclosure, so it should be understood the actual structure may be modified as regards the structure disclosed without departure from the true spirit and broad scope of the invention.

Fig. 1 is a broken part sectional view of the delivery hose end of the apparatus, showing particularly the nozzle valve and the enclosed Bowden wire control extending from the nozzle valve back to the control valve and switch at the head of the hose; Fig. 2 is an enlarged cross-sectional detail of the combined valve and switch as taken on substantially the line 2—2 of Fig. 1; Fig. 3 is a broken part sectional detail of the Bowden wire control, modified to cause the sheath or outer element of the Bowden wire to effect the desired valve or switch operation; Fig. 3*a* is an enlarged broken sectional detail of the same; Fig. 4 is a broken elevation illustrating an alternative form of switch and valve in use at the head of the hose and showing also a pressure form of tank or chamber for de-airing the liquid, maintaining a proper pressure and relieving the pressure on the system; Fig. 5 is an enlarged broken sectional detail showing the sylphon connection at the upper end of the operating wire of the hose; Fig. 6 is a view similar to Fig. 4 illustrating the employment of a three-way valve which vents back through the pressure relieving vent; Fig. 7 is a broken sectional detail illustrating a cam and sylphon form of connection between the valve and switch.

In the several views, the delivery hose is indicated at 10, the same being shown as having a nozzle valve 11 at the discharge end of the same operated by a hand lever 12. In Fig. 1, the stem of the nozzle valve is shown as extended at 13 to operate against one arm 14 of a bell crank pivoted at 15 in the body of the valve and having a second arm 16 connected with the wire or inner member 17 of a Bowden wire construction, the outer member of said construction being shown at 18 as a flexible helical wire sheath surrounding and guiding the actuating wire.

This Bowden wire construction is shown as housed entirely within the hose passage, being anchored at the ends of the hose by having the sheath of the wire entered and secured in the clips or clamps 19 inside the end fittings of the hose. In this way, the Bowden wire can not "creep" or slip about inside the hose, though it may be spiralled down the length of the hose, so as to lie in place against the inner walls of the hose and flex with the hose without objectionably varying its length in bending the hose.

At the upper or entry end of the hose, a delivery valve may be provided, the same being illustrated in Figs. 1 and 2 as a rotary valve body 20 turning in a valve casing 21 interposed in the liquid delivery line 22. This valve plug is illustrated as having an arm 23 operating within the valve casing and connected with the power transmission wire 17 at 24. A spring is shown at 25 acting on the valve handle 23 to return the valve to the closed position, said spring also serving to pull the power transmission wire back in its casing when pressure on the nozzle valve opening handle is released.

The Bowden wire control may be utilized to operate a controlling switch either alone or in conjunction with the delivery valve. In the illustrations, Figs. 1 and 2, such a control switch is indicated at 26 located in a tight casing 27 at the end of the valve spindle and

having a coupling with said valve spindle at 28, so that as the valve is operated, the switch will also be actuated, for instance, to start and stop a motor driven pump supplying liquid into the delivery line.

Fig. 3 illustrates a construction and arrangement by which the casing or outer member of the Bowden wire may be utilized as the power transmission element by pinning the ends of the inner member at 29 in the end fittings of the hose, so that it will serve as a guide over which the casing may slide and by providing the ends of the casing with sleeve members 30, 31 connected respectively with the nozzle valve actuated bell crank lever 32 and with the head 33 of a sylphon 34. The end sleeves 30, 31 of the Bowden wire sheath are shown as slotted at 35, so as to slide over the transverse anchorage pins 29 of the inner wire member. The spring closing action of the metallic bellows or sylphon 34 operates as a returning spring for the sheath of the Bowden wire, but if desired, an extra or special returning spring may be provided. It will be observed that in this construction when the valve lever is depressed to open the nozzle valve, the sheath of the Bowden wire will be pushed back over the inside wire as a guide and will thereby push out or expand the sylphon providing the necessary movement for operating a controlling switch, delivery valve or the like. It will be obvious, that this same "push" movement of the outer member of the Bowden wire may be utilized with an enclosed valve construction such as shown in Fig. 1, the valve, of course, being reversely operating to suit the "push" instead of the "pull" action of the Bowden wire.

In the construction shown in Figs. 4 and 5, the "pull" action of the Bowden wire is utilized to throw a switch and open a delivery valve through the medium of an end sylphon as indicated at 34. In this particular instance the helically interlocked metallic "core" 36 of the hose 10 is utilized as the so-called outer member of the Bowden wire, the inner member, that is the wire 17 sliding directly in this helically coiled flexible sheath and serving in this case as the power transmission element, connected with the head of the sylphon at 37 to pull in or collapse the sylphon when the nozzle valve is actuated.

The external operating connections may vary to suit different conditions. In Figs. 4 and 6, the sylphon head 33 is shown as carrying a pin 38 operating in a slot 39 in one arm of a bell crank lever 40, whose other arm is coupled at 41 with an enclosed rocking mercury switch 42 for governing the pump a magnetic valve or other liquid flow mechanism. The delivery valve which in this case is designated 43 is shown as actuated from a lug 44 from the lower arm of the bell crank lever through a sylphon construction 45.

In both Figs. 4 and 6, a liquid flow meter is indicated at 46 at the head of the delivery hose and it will be understood that the constructions first described also may operate in conjunction with a suitable flow meter.

To preserve a continuous smooth flow of the liquid, free of air or gas, a pressure or delivery tank may be interposed in the delivery line as indicated at 47 in Figs. 4 and 6, the same being indicated as an upright section of large diameter piping having a T fitting 48 secured in the lower end of the same and arranged with a section 49 of the delivery pipe extending up into the lower portion of the same and with an extension 50 of the delivery pipe extending from the side of the fitting. The pipe section 49 thus provides the entry into the tank 47 and the pipe section 50 forms the outlet therefrom, both communicating with the lower portion of the tank, below the air cushion which is established in the top of the tank for exerting a steadying pressure on the flow. This air cushion is controlled, in the construction shown, by a pipe 51 entered in the top of the tank and extending down to a desired liquid level therein, said pipe having an external venting connection 52, which may be extended back into the system as in Patent 1,717,274 of June 11, 1929, to save the gases and lighter fractions.

In Fig. 4 the operation of the Bowden wire control throws the switch to start the pump or other flow governing device and opens the delivery valve, putting the hose in communication with the delivery line through the meter, the flow being timed and governed in quantity entirely by the operation of the nozzle valve. The by-pass piping 51, 52 is of the proper size or contains a flow restricting bushing as in Patent 1,717,274, so that the loss of pressure through this vent is not sufficient to objectionably affect the delivery of liquid, but this vent is sufficient to release the pressure in the delivery system practically as soon as the delivery is completed, the fluid continuing its escape through this by-pass until the liquid level drops back to the end of pipe 51, uncovering the mouth of the vent and permitting the cushion of trapped air to automatically relieve its pressure.

As a further precautionary measure, the delivery valve may be of the three-way type as illustrated at 53 in Fig. 6, where, as the valve approaches the closed position, an extra valve element 54 opens up passage through a vent pipe 55 extending back to the by-pass piping 52.

As shown in Fig. 7, the movable element of the switch, the latter designated 42′, may be sealed in with a sylphon 56, which may be acted upon by a cam or the like 57 on the end of the delivery valve stem 58.

In Fig. 4, the relative liquid levels are indicated substantially as they exist after a delivery of liquid, this view illustrating how the

body of liquid in tank 47 acts as a "head" on the meter and how a body of air remains trapped in the upper portion 47′ of the tank above the mouth of the vent pipe 51 ready to function as an air cushion during the next delivery operation. Substantially the same effect is obtained in the Fig. 6 construction, with the additional leg 55 of the by-pass aiding in the de-airing and de-gasifying of the liquid. The parts are preferably so proportioned that if the valve 53 is permitted to close beyond the point where less than four gallons per minute will be delivered, at fifteen pounds pressure, which amount is usually considered the minimum for accurate meter operation, the by-pass valve 54 will be opened sufficiently to reduce the pressure below that where liquid will be delivered through the hose. In order that this result will be surely effected, the by-pass 55 is made large enough to thus reduce the pressure and so may be connected into the vent return line 52 at a point beyond or toward the storage tank from the restricted portion of the same indicated at 51′.

Where the Bowden wire operation is brought out at the upper end of the hose as indicated in Figs. 3 to 6, the sylphon or other packing 34, as well as the upper terminal of the wire may all be located within or on a branch or angle 59 of the pipe fitting at the upper end of the hose. This locates the Bowden wire terminal in a "bay" off to the side of the main liquid channel where it does not objectionably affect and is not objectionably affected by the flow of liquid. The branch is shown as inclined off from the main line at a slight angle so as to put but a slight bend in the wire and therefore not interfere with the free operation of the Bowden wire structure. From the disclosure, it will be apparent that the straight leg of the Y fitting might be used for the Bowden wire operation and the inclined leg be used for the liquid flow, so as to get a straight line operation at the end of the Bowden wire, or both branches of the Y might be relatively inclined to the portion of pipe or hose below the same.

Whether straight or inclined, the part into which the Bowden wire extends may be considered as the "branch" since it is usually only a short length and is closed by the sylphon or other means enabling transmission of power to the bell crank or other external mechanism for operating the flow governing device or devices. The enlargement of the delivery line in Fig. 1 into the housing 21 to accommodate the valve operating lever 23 provides in effect a "bay" enabling free operation of the Bowden wire connection without restricting the liquid flow and therefore equivalent in effect to the bay provided by the branch 59 in the other views.

The construction of the air trapping pressure tank is particularly simple, inexpensive and lends itself well to the placing of the same near the meter in position to maintain the desired liquid head on the meter. As explained above, this tank may consist of a single section or shell of piping closed at the top by a cap such as indicated at 60 through which is entered the level determining vent or by-pass and having at the bottom another cap into which the through passage of the T-fitting 48 may be secured by a nipple 62, the outlet pipe 50 being taken out through the side or intermediate passage of the T-fitting and the inlet pipe 49 being entered up into the through passage above the level of the outlet.

In Fig. 6, the push-operating Bowden wire construction of Fig. 3 is shown employed for operating the delivery valve and switch, but it will be obvious that the pull-operation form of construction may be employed the same as in Fig. 4.

In lieu of or in addition to the air cushioning pressure chamber provided by the separate or extra tank, such as indicated at 47, the upper meter chamber may be utilized as a special air cushion and pressure relieving chamber by equipping the same as indicated in Fig. 6 with a by-pass or vent pipe 63 extended down into the chamber to the liquid level which it is desired to maintain in said chamber above the disc chamber, said vent preferably being carried back to the suction side of the pump, so as to relieve the back pressure in the meter chamber when the nozzle valve is throttled to reduce the discharge flow.

This by-pass may have an automatic pressure relieving valve therein or be a constantly open restricted flow vent the same as in Patent 1,717,274, so as to enable a sufficient flow or movement of liquid in the rocker chamber of the meter to overcome the friction of the stuffing box of the dial driving shaft in the head of the meter.

It will be apparent to those skilled in the art, that various changes may be made all within the scope of the invention and the intent of the following claims and in this connection, it should be understood that the terms employed herein have been used in a descriptive rather than in a limiting sense, except for such limitations as may be required by the state of the art.

What is claimed is:

1. Liquid delivery apparatus, comprising in combination, a flexible liquid delivery hose, a Y fitting at the entry end of said hose, a liquid delivery line connected with one branch of said fitting, a flexible sylphon closing the other branch of the fitting, liquid flow governing means operable by said sylphon and a flexible mechanical operating connection extending from the discharge end portion of the hose, back through the hose to said sylphon.

2. Liquid delivery apparatus, comprising in combination a flexible liquid delivery hose, a Y fitting at the entry end of said hose, a liquid delivery line connected with one branch of said fitting, a flexible sylphon closing the other branch of the fitting, liquid flow governing means operable by said sylphon, a flexible mechanical operating connection extending from the discharge end portion of the hose, back through the hose to said sylphon and means at the discharge end portion of the hose for arbitrarily operating said flexible mechanical connection.

3. In apparatus of the character disclosed, a liquid conveying line having a branch, flexible sealing means closing said branch, liquid flow governing means operably connected with said flexible sealing means and a flexible mechanical operating connection extending from the discharge end portion of the line back through the line to said flexible sealing means.

4. In combination with a liquid flow line terminating in a flexible hose and having a branch in communication with said hose, a flexible Bowden wire operating connection located within the hose and extending into the branch aforesaid, means at the end of the hose for operating said flexible Bowden wire connection and an external power transmitting device at the end of said branch operably engaged with the end portion of said Bowden wire.

5. In combination with a liquid flow line terminating in a flexible hose and having a branch in communication with said hose, a flexible Bowden wire operating connection located within the hose and extending into the branch aforesaid, means at the end of the hose for operating said flexible Bowden wire connection and an external power transmitting device at the end of said branch operably engaged with the end portion of said Bowden wire, said Bowden wire connection including relatively slidable inner and outer members, one of said members being fastened at its ends to serve as a guide for the other member and said other member being in connection at its opposite ends with the operating means and power transmitting device respectively.

6. In combination with a liquid flow line terminating in a flexible hose and having a branch in communication with said hose, a flexible Bowden wire operating connection located within the hose and extending into the branch aforesaid, means at the end of the hose for operating said flexible Bowden wire connection and an external power transmitting device at the end of said branch operably engaged with the end portion of said Bowden wire, said Bowden wire connection including a wire and oversliding tubular sheath, said wire being secured to serve as a guide for the sheath and said sheath being arranged as a push connection between the operating means and power transmitting device.

7. In apparatus of the character disclosed, a liquid flexible delivery line having a bay, a delivery hose forming part of said liquid delivery line, operating means at the discharge end of the hose, a flexible Bowden wire connection extending from said operating means back through said flexible hose to said "bay" in the delivery line and externally located means at said bay in the delivery line operably connected with said Bowden wire connection.

8. In combination with a liquid delivery line terminating in a flexible delivery hose, a nozzle valve at the discharge end of said hose and provided with an external handle, a flexible Bowden wire including a flexible wire located within the hose and connected at its lower end with the nozzle valve mechanism and a flexible power transmitting seal and liquid flow controlling means at the opposite end of the hose operatively connected with the Bowden wire located within the hose.

9. In combination with a flexible hose and means governing liquid flow therethrough, a Bowden wire located within the hose and comprising slidably related inner and outer flexible members, means for securing the inner member to enable the same to serve as a guide for the outer member, means adjacent one end of the hose for positively sliding said outer member over the inner guide member and means adjacent the opposite end of the hose actuated by said outer member to control the governing means aforesaid.

10. In combination with a flexible delivery hose, a Bowden wire carried by the hose and comprising an inner flexible member and an outer flexible sheath surrounding the inner member, means for fixedly securing the inner member in the hose to enable the same to serve as a guide for the sheath, means at one end of the Bowden wire for positively pushing the sheath over the inner guide member and power transmission means at the opposite end of the Bowden wire and actuated by the pushing movement of the Bowden wire sheath.

11. In liquid delivery apparatus, a delivery line, a flow meter in said delivery line, a delivery valve in the line adjacent said meter, a hose at the end of the delivery line, a tank in communication with the delivery line for supporting a body of the liquid at a higher level than the meter, a vent line in communication with the interior of the tank at a point higher than the liquid level of the meter, a vent line extending from the interior of the valve back to the first vent line and a Bowden wire connection carried by the hose for controlling said delivery valve and second vent line.

12. In liquid delivery systems, a delivery line, a delivery valve therein, a conjointly

operable vent valve in said delivery line, a meter in the delivery line and an air trapping pressure tank in the delivery line positioned at a level to maintain a gravity head of liquid on the meter.

13. In combination, a liquid delivery line having a flow meter therein and an air trapping pressure tank interposed in said liquid line and positioned at a level high enough to maintain an air cushioned gravity head of liquid on the meter.

14. An air trapping pressure tank for liquid delivery lines, comprising an upright section of pipe capped at the top, a vent line entered through the top cap of the pipe section and extending down into said upright section of pipe to trap an air cushion thereabout in the upper end of said pipe section, a T fitting having the through passage of the same connected with the bottom of the pipe section, an outlet pipe connected with the intermediate passage of the T-fitting and an inlet pipe entered up into the through passage of the T-fitting and extending to a point above the side outlet aforesaid to provide a well of liquid in said through passage about said entered inlet pipe in direct communication with said intermediate passage.

15. In apparatus of the character disclosed, the combination of a liquid delivery line, a pump for producing liquid flow through said line, a flow meter in said liquid line, said meter having an internal chamber and a constantly open vent line entered to an intermediate level in said chamber and extending back to the suction side of the pump.

16. In apparatus of the character disclosed, the combination of a liquid flow line, a meter in said line, said meter having a liquid chamber therein, and a vent line separate from said liquid flow line and open to said meter chamber at an intermediate level therein.

17. In combination, a liquid flow line, a flow meter in said line, said flow meter having a liquid containing chamber in the upper portion thereof and a vent line entered in the top of said chamber and extending down to an intermediate level in said chamber.

18. In combination, a liquid flow line, a flow meter in said line, said flow meter having a liquid containing chamber in the upper portion thereof and a vent line entered in the top of said chamber and extending down to an intermediate level in said chamber, said meter chamber vent line being connected into said liquid flow line.

19. In combination, a liquid flow line, a flow meter in said line, said flow meter having a liquid containing chamber in the upper portion thereof and a vent line entered in the top of said chamber and extending down to an intermediate level in said chamber, said vent line being constantly open to relieve pressure in the meter chamber.

20. An air trapping pressure tank for liquid delivery lines, comprising a tank having a liquid supply line entered up through the bottom portion of the same and provided with a liquid well surrounding the entered portion of the liquid supply line, with a liquid take-off extending from said liquid well for delivering de-aired liquid to a meter or the like and a vent line in communication with the interior of the tank at an intermediate level therein for determining a normal liquid level in said tank with an air cushion space above said normal liquid level.

21. An air trapping pressure tank for liquid delivery lines, comprising an upright tank having a vent line open to an intermediate level therein, an angle pipe fitting in communication with the lower portion of the tank, having a vertically extending through passage and a laterally extending liquid take-off passage, a liquid supply pipe entered up through the vertical passage of the pipe fitting with space about the same providing a liquid well below the upper end of said inlet pipe and in communication with the lateral liquid take-off passage.

22. In liquid dispensing systems, a flexible liquid delivery hose, an operating device adjacent the discharge end of said hose, flow governing mechanism adjacent the opposite end of the hose and a Bowden wire connection between said operating device and flow governing means, said Bowden wire connection being disposed within the hose and arranged in spiral relation lying in such coiled condition against the inner walls of the hose to thereby conform to twisting movements of the hose without objectionably varying in effective length.

23. In liquid dispensing systems, a flexible liquid delivery hose, operating means adjacent the discharge end of the hose, flow control means adjacent the other end of the hose and a Bowden wire connection carried by and arranged in spiralled relation on the hose and forming a mechanical connection between said operating means and flow governing means.

24. In liquid delivery apparatus, the combination of a liquid delivery line having an air vent, a valve in said liquid delivery line controlling said air vent and remote control operating connections extending from the discharge end of said liquid delivery line back to said air vent valve.

25. In liquid delivery apparatus, the combination of a liquid delivery line having an air venting connection, a valve in said liquid delivery line controlling said air venting connection and mechanical actuating connections extending from the discharge end of the liquid delivery line to said air venting valve.

26. In liquid delivery apparatus, the com-

bination of a liquid flow line having a meter interposed therein and said liquid flow line being provided with a venting connection, a valve in said liquid flow line and controlling said venting connection and remote control operating connections extending from the discharge end of said delivery line back to said vent valve.

27. In combination with a flexible delivery hose, a Bowden wire carried by the hose and comprising an inner flexible member and an outer flexible sheath surrounding the inner member, means for fixedly securing the inner flexible member to the hose to thereby enable the same to serve as a guide for the sheath, the flexible sheath being slidable over said guide member, means at one end of the Bowden wire for positively sliding the thus guided sheath over the inner guide member and means at the opposite end of the Bowden wire and connected for operation by said over-sliding flexible sheath.

28. In liquid dispensing systems, a flexible delivery hose, operating means at the discharge end of the hose, flow control means adjacent the other end of the hose and a Bowden wire connection extending through said hose between said operating means and flow control means and having a portion disposed in curved formation to compensate for twisting movements of the hose without objectionably varying in effective length.

In testimony whereof I affix my signature.

GEORGE W. STEDWELL.