Nov. 8, 1932. J. R. O'BRIEN 1,886,720

ROAD MARKER AND METHOD OF PLACING THE SAME IN A PAVEMENT

Filed Jan. 24, 1927 2 Sheets-Sheet 1

Fig. 1

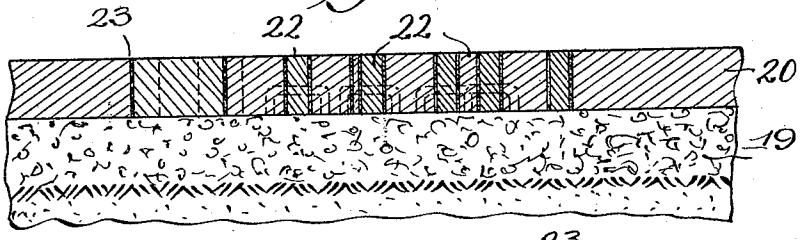

Fig. 2



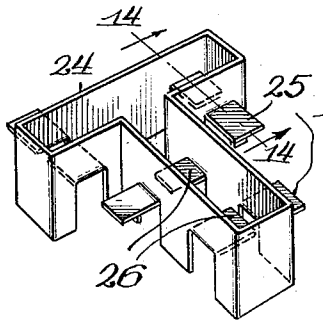

Fig. 13

Fig. 3

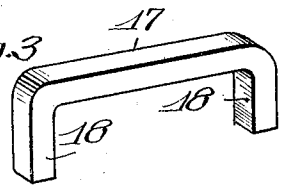

Fig. 14

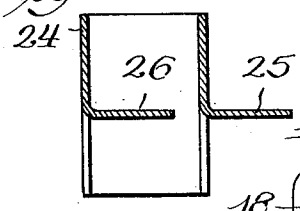

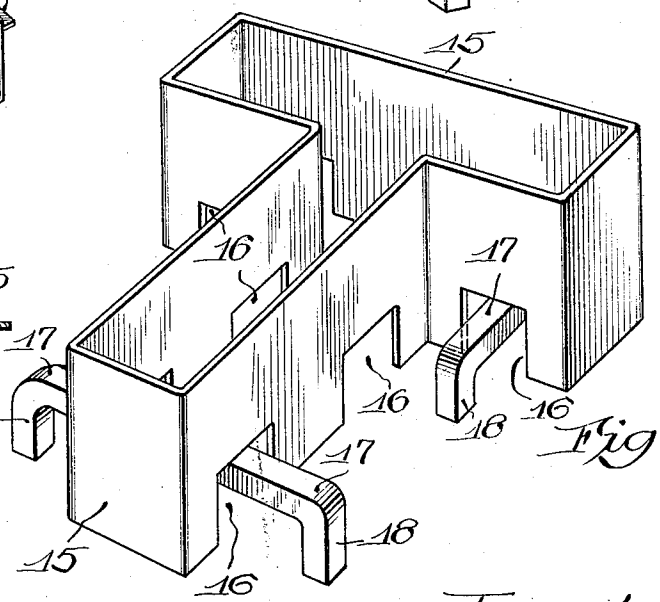

Fig. 4

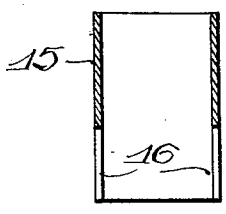

Fig. 5

Inventor,
James Raymond O'Brien,
By J. F. Jochum & Libby.

Nov. 8, 1932. J. R. O'BRIEN 1,886,720

ROAD MARKER AND METHOD OF PLACING THE SAME IN A PAVEMENT

Filed Jan. 24, 1927 2 Sheets-Sheet 2

Fig. 6

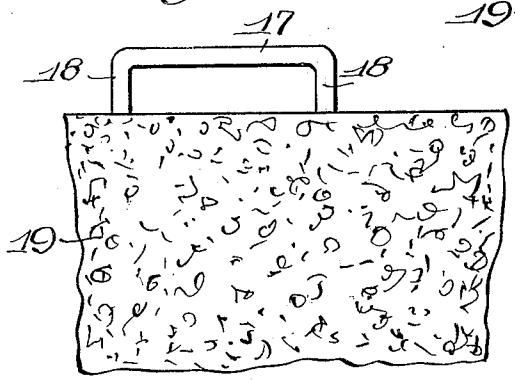

Fig. 7

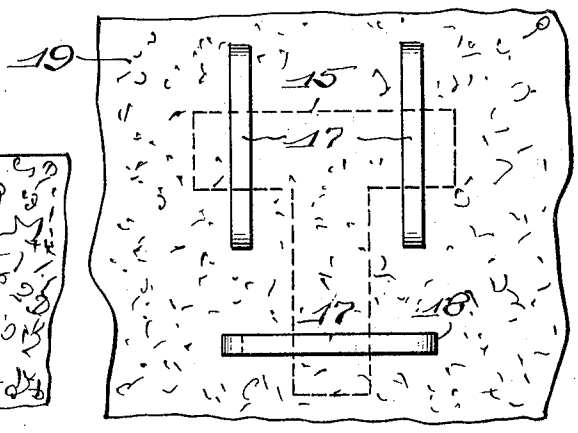

Fig. 8

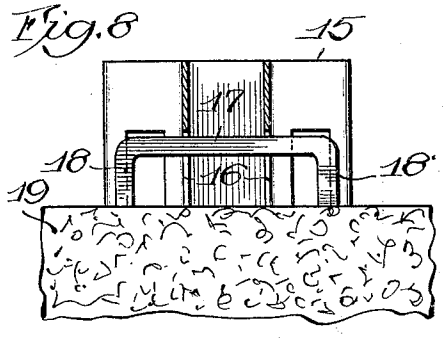

Fig. 9

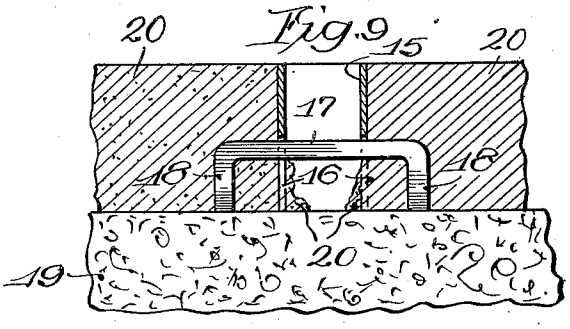

Fig. 10

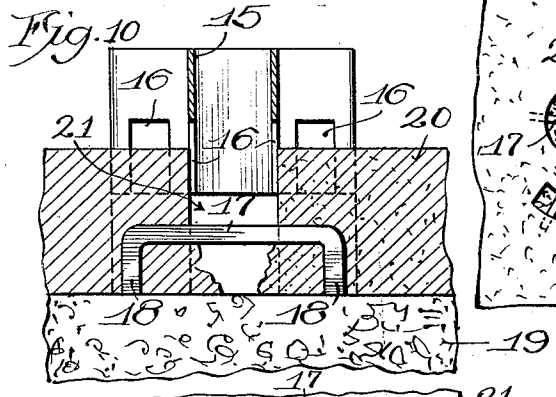



Fig. 12

Fig. 11

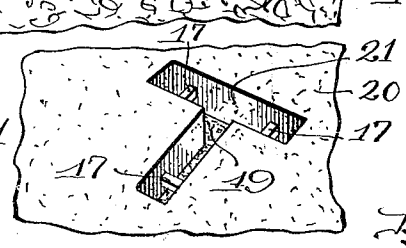

Inventor,
James Raymond O'Brien
By [illegible] Atty.

Patented Nov. 8, 1932 1,886,720

UNITED STATES PATENT OFFICE

JAMES RAYMOND O'BRIEN, OF CHICAGO, ILLINOIS, ASSIGNOR, BY MESNE ASSIGNMENTS, TO RUBBER PRODUCTS CORPORATION, OF DOVER, DELAWARE

ROAD MARKER AND METHOD OF PLACING THE SAME IN A PAVEMENT

Application filed January 24, 1927. Serial No. 163,005.

This invention relates to improvements in road markers particularly adapted, though not necessarily limited in its use, in connection with pedestrian and vehicle traffic, and one of the objects of the invention is to provide an improved marker of this character adapted to be embedded in the pavement and an improved method of preparing the pavement for the reception of and placing of the marker in position.

A further object is to provide improved means for anchoring or securing the marker in position in the pavement and in a manner to prevent accidental or unauthorized removal of the same.

A further object is to provide an improved marker of this character which may be readily placed in position in a pavement which has already been constructed or laid in a pavement which is under course of construction, the upper surface of the marker when in position being substantially flush with the adjacent surface of the pavement.

A further object is to provide improved means for forming in the pavement a pocket or recess adapted to receive the substance constituting the marker proper and which recess or pocket will be of a contour or configuration in simulation of the character or object to be depicted by the marker.

To the attainment of these ends and the accomplishment of other new and useful objects as will appear, the invention consists in the features of novelty in substantially the construction, combination and arrangement of the several parts hereinafter more fully described and claimed and shown in the accompanying drawings illustrating this invention, and in which

Figure 1 is a vertical, longitudinal sectional view taken on line 1—1, Figure 2.

Figure 2 is a top plan view of a portion of a pavement having a marker constructed in accordance with the principles of this invention applied thereto.

Figure 3 is a detail perspective view of one of the anchors of the marker element.

Figure 4 is a detail perspective view of a mold or form for preparing the pavement for the reception of the marker and showing one or two anchors in position.

Figure 5 is a vertical sectional view of one end of the form shown in Figure 4.

Figure 6 is a diagrammatic view showing one step in the placing of this marker in position.

Figure 7 is a top plan view showing several of the anchors in position.

Figure 8 is a vertical sectional view showing the anchor and form in position before the pavement is placed therearound.

Figure 9 is a view similar to Figure 8 with a portion of the pavement in position.

Figure 10 shows another step in the method of applying the marker in which the mold or form is shown as being partially withdrawn.

Figure 11 is a detail perspective view of a portion of a pavement prepared for the reception of the marker.

Figure 12 is a top plan view showing the pavement before the marker is placed in position therein.

Figure 13 is a detail perspective view of another form.

Figure 14 is a sectional view taken on line 14—14, Figure 13.

Referring more particularly to the drawings the numeral 15 designates a form, which in the present exemplification of this invention, is in the shape of a letter or character which will constitute a portion of the marker.

This form may be constructed of any suitable material preferably metal and may be of any desired size and configuration.

The form is preferably hollow and the lower edges of the wall or walls thereof are cut away as at 16, any number of which cut away portions may be employed.

The numeral 17 designates generally an anchor member which may be constructed of any suitable material, but is preferably of some rigid material such as metal and may be either shaped in the form of a flat member with the extremities 18 thereof deflected or the anchor may be cast or molded.

These anchors may be of any desired size and length and are adapted to enter the openings 16 in the form 15 when the latter is placed in position in the pavement, and the

anchor members 17 project for any desired distance beyond the sides of the form.

In placing the marker in position the anchor members 17 are placed upon a road bed 19 and in such position that when the form 15 is placed upon the road bed as shown in Figure 8, the openings or cut away portions 16 will receive the anchors 17. The number of anchors 17 which are employed depends upon the form or shape of the character and the extent that it is desired to anchor the marker element.

After the parts have been assembled as shown in Figure 8, the pavement 20 is placed in position so that it will contact with the sides of the form 15, the extremities of the markers 17 and deflected portions 18 thereof being embedded in the pavement.

A portion of the pavement 20 may pass through the openings 16 in the form but this will not be objectionable.

After the pavement has been allowed to stand for a sufficient length of time so as to allow it to set or partially set, the form 15 may be removed as shown in Figure 10, but the anchor element 17 will remain in position so that when the form 15 has been removed there will be provided in the pavement 20 a pocket or recess 21 opening through the top of the pavement and in the form of the character or letter delineated by the form 15. It will be noted that the anchor element 17 will always be spaced above the bottom of the pavement or above the road bed 19.

It will be manifest that with this invention any form or character of marker may be provided, that is to say the marker will be in the form of a single element or separate elements arranged together to produce a word or assembled characters.

As shown in Figure 12, the word "Stop" has been outlined by the pockets or recesses in the pavement 20.

The marker element proper 22 is formed of any suitable material of a plastic, semi-plastic or pulverulent nature which will be of a consistency that it may be placed within the pockets or recesses 21 so as to fill the pockets or recesses, some of the material passing under the portion of the anchor 17 that passes transversely through the pockets or recesses above the bottoms thereof.

The material of which the marker elements proper are formed is such that it will withstand considerable wear and when placed in position will be anchored in such a manner that it will not be readily displaced.

If desired, any suitable material 23 such as cement or the like may be interposed between the wall of the marker element proper and the adjacent wall of the pocket or recess containing the element so as to seal the same against the possibility of the entrance of any moisture into the pockets or recesses.

The pockets or recesses 21 may be formed of any desired depth and this improved marker is readily adapted to be inserted in a pavement which has already been constructed as well as in a pavement which is under the course of construction.

In the event that the marker is to be inserted in a pavement which has already been constructed, the portion of the pavement to receive the marker will be cut away to form an opening therein large enough to receive the form or forms and the marker may be constructed in a single form or a plurality of forms adapted to be assembled in any desired manner.

While it is preferable to employ a removable form such as 15, for the purpose of forming the pockets or recesses, it is to be understood that the present invention is not to be limited to a removable form as the form itself may constitute the pocket or recess. Such a form is shown in Figure 13, in which the material constituting the marker element proper will be deposited or placed within the form itself. If this form is to be allowed to remain in the pavement the anchor elements may be formed integral with the form, so as to project into and across the form as well as project beyond the lateral walls of the form.

In this form of the invention the numeral 24 designates the form and 25 anchor portions formed integral therewith and projecting beyond the outer face of the form. Similar anchor portions 26 are also formed integral with the form and project into and in a direction across the form. The anchors 25 will be embedded in the pavement while the anchors 26 will be embedded in the body portion of the member proper.

While the preferred forms of the invention and the preferred method of placing the marker in position in the pavement have been herein disclosed, it is to be understood that various changes may be made in both, within the scope of the claims, without departing from the spirit of this invention.

What is claimed as new is:—

1. The method of placing a road marker which consists in placing in a pavement an anchor, then placing a form in the pavement over the anchor, a portion of the anchor extending beyond the form, then filling in the pavement around the said form and over the projecting portion of the anchor, then removing the said form to provide a recess or pocket, the said anchor remaining in the pavement and extending in a direction across the recess or pocket, and then filling in the recess or pocket with a suitable material to form the body of the marker, the portion of the anchor in the said recess or pocket being embedded in the body of the marker element.

2. The method of placing a road marker which consists in placing in a pavement an anchor, then placing a form in the pavement over the anchor, the said form having one or

more recesses opening through the bottom thereof to receive the anchor, a portion of the anchor extending beyond the form, then filling in the pavement around the said form and over the projecting portion of the anchor, then removing the said form to provide a recess or pocket, the said anchor remaining in the pavement and extending in a direction across the recess or pocket, and then filling in the recess or pocket with a suitable material to form the body of the marker, the portion of the anchor in the said recess or pocket being embedded in the body of the marker element.

3. The method of placing road markers in pavements which consists in placing in a pavement a form and anchoring means extending across and disposed below the top of said form, a portion of said anchoring means projecting beyond the lateral faces of the form, said form serving to provide a pocket or recess in the pavement of substantially the shape of the marker, and then filling in the said pocket or recess with a suitable material to form the body of the marker and embed the portion of the said anchoring means which is within the form.

4. The method of placing road markers in pavements which consists in forming an opening in the pavement, then placing a hollow form in the said opening, said form being of a size to form a space between its periphery and the wall of the opening, then filling in the space between the periphery of the marker element and the adjacent wall or face of the pavement with a cement, then removing the form to provide a pocket or recess in the pavement of substantially the shape of the marker, then filling in the said pocket or recess with a suitable material to form the body of the marker element.

5. The method of placing a road marker in a pavement which consists in forming in the pavement a pocket or recess of substantially the shape of the marker element, then placing an anchor element in the recess to extend in a direction thereacross and spaced above the bottom of the recess, and then filling in the recess with a suitable material, the anchor element being embedded in and extending beyond the upright face of the marker element.

6. A road marker directly shaped and constructed in a pavement while the latter is being made, said marker embodying a body portion constructed of paving material, the upper surface of the marker being substantially flush with the adjacent surface of the pavement, and an anchor embedded in the body of the marker element, a portion of the anchor projecting beyond the lateral edge of the marker element intermediate the upper and lower faces of the element, to be embedded in the pavement and in the marker during the operation of constructing the marker in the pavement.

7. A road marker embodying a block like body portion, an anchor element embedded in the said body portion intermediate the top and bottom surfaces thereof and spaced from both, the ends of the anchor projecting beyond the edges of the body, said projecting ends extending downwardly, the extremities of said downwardly extending portions beyond the said body being substantially flush with the lower face of said body portion.

In testimony whereof I have signed my name to this specification on this 11th day of January, A. D. 1927.

JAMES RAYMOND O'BRIEN.