Feb. 9, 1965 H. PARLANTE ETAL 3,168,972

PISTOL HOLSTER WITH LIMITING SWING CLUTCH

Filed Sept. 16, 1963 2 Sheets-Sheet 1

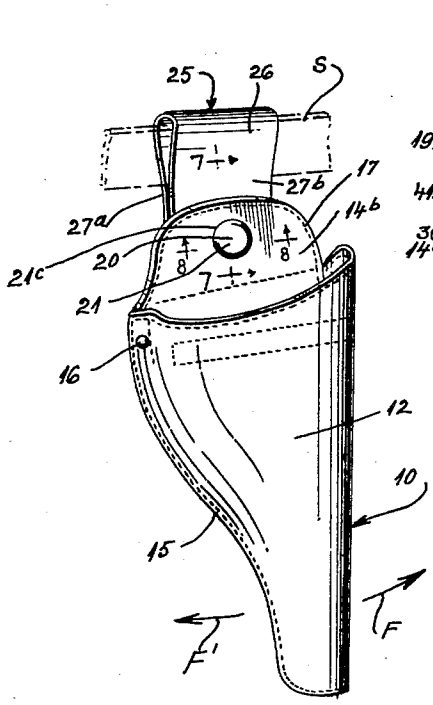

Fig. 1.

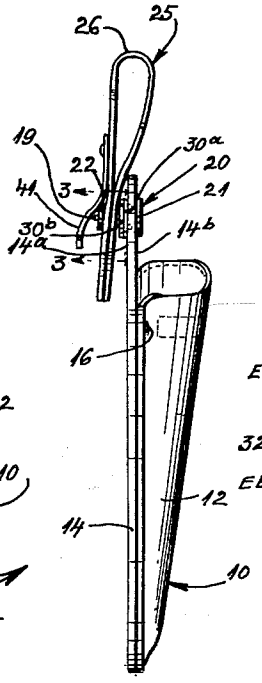

Fig. 2.

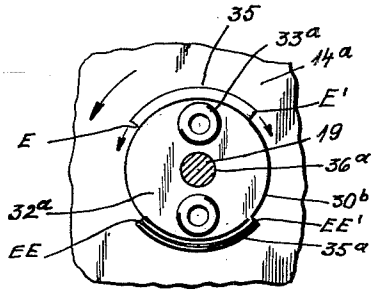

Fig. 3.

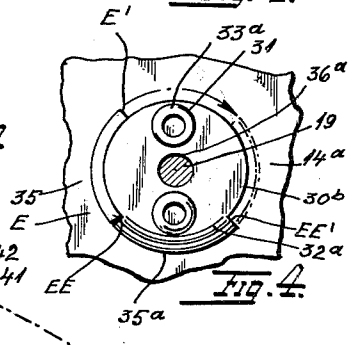

Fig. 4.

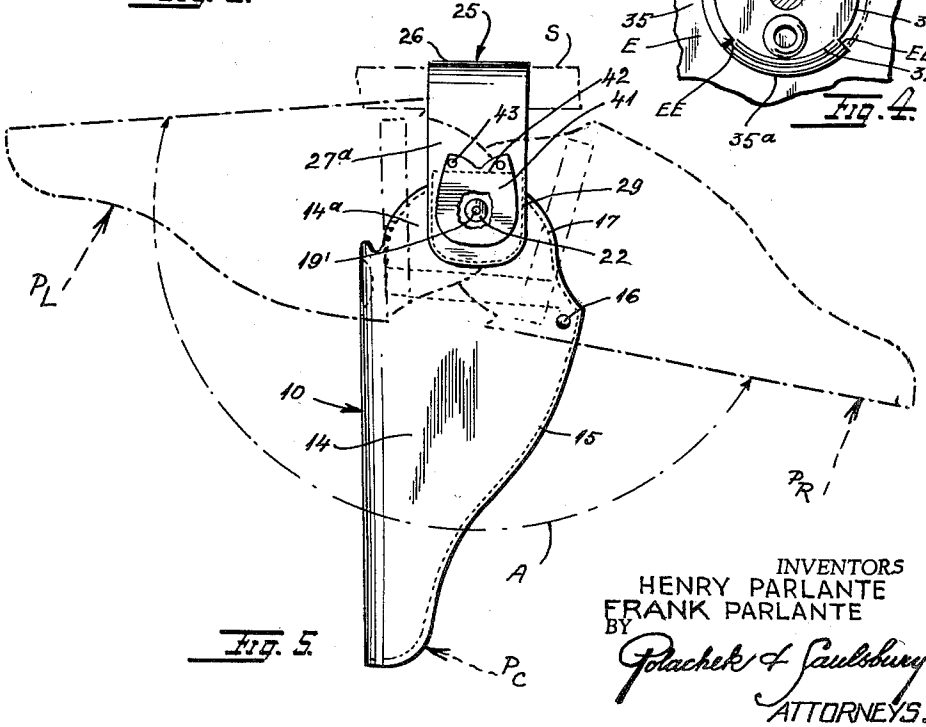

Fig. 5.

INVENTORS
HENRY PARLANTE
FRANK PARLANTE
BY
Polachek & Saulsbury
ATTORNEYS.

Feb. 9, 1965 H. PARLANTE ETAL 3,168,972

PISTOL HOLSTER WITH LIMITING SWING CLUTCH

Filed Sept. 16, 1963 2 Sheets-Sheet 2

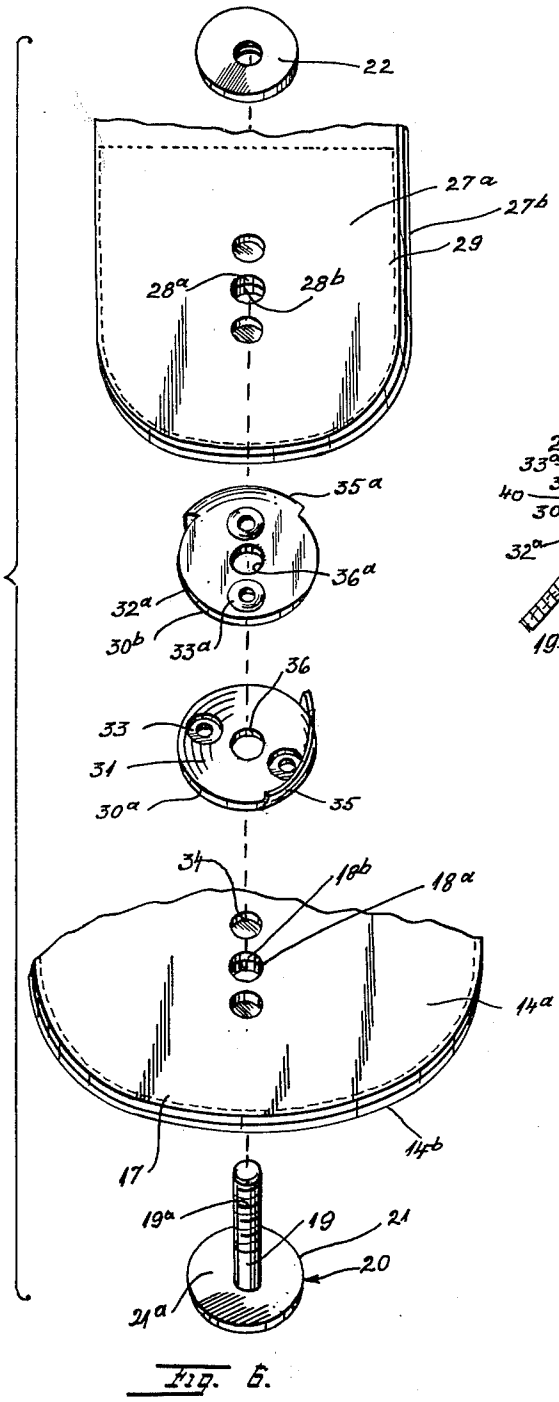

Fig. 6.

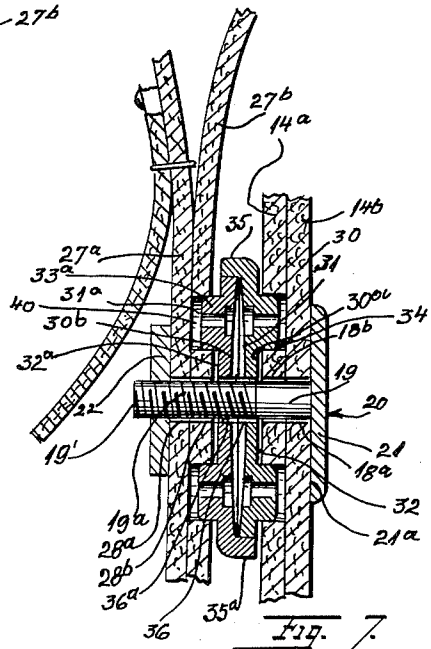

Fig. 7.

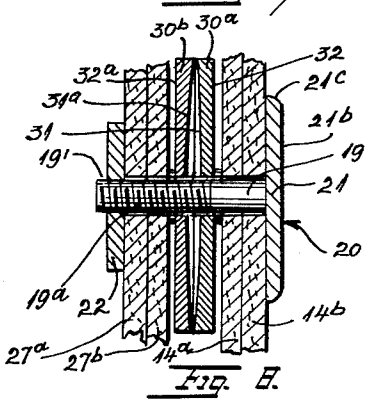

Fig. 8.

INVENTORS
HENRY PARLANTE
FRANK PARLANTE
BY
Polachek & Saulsbury
ATTORNEYS.

United States Patent Office 3,168,972
Patented Feb. 9, 1965

3,168,972

PISTOL HOLSTER WITH LIMITING SWING CLUTCH

Henry Parlante, 2706 Utopia Parkway, Flushing, N.Y., and Frank Parlante, 2072 Gerritsen Ave., Brooklyn, N.Y.

Filed Sept. 16, 1963, Ser. No. 308,981
2 Claims. (Cl. 224—2)

This invention concerns a holster with a swivel mounting.

It has been proposed heretofore to provide pistol holsters with swivel mountings or couplings of various types, all of which have been rather complicated with many special, intricate parts.

It is one object of the present invention to provide a pistol holster with an improved swivel mounting to limit turning of the holster through a predetermined angle in the plane of the holster.

Another object is to provide a pistol holster with a supporting loop engageable upon a stationary belt, and with a simplified swivel joint or coupling between the holster and the loop to limit turning of the holster.

Other objects are to provide means so that a holster can be turned easily and sufficiently to permit easy removal of the pistol from the holster; to provide means to permit easy swinging and turning of the holster so that it can be comfortably worn on a belt; to provide means for limiting free turning of a holster at opposite ends of predetermined turning angle so that a pistol in the holster will not fall out of the holster; to provide a swivel mounting or joint for a holster which can be easily assembled; and to provide a swivel joint or coupling of simplified construction.

For further comprehension of the invention, and of the objects and advantages thereof, reference will be had to the following description and accompanying drawings, and to the appended claims in which the various novel features of the invention are more particularly set forth.

In the accompanying drawings forming a material part of this disclosure:

FIG. 1 is an outer side elevational view of a holster embodying the invention.

FIG. 2 is an edgewise elevational view of the holster.

FIG. 3 is a sectional view on an enlarged scale taken on line 3—3 of FIG. 2.

FIG. 4 is a view similar to FIG. 3 showing parts of the swivel joint assembly in a different position about 90° from that of FIG. 3.

FIG. 5 is an inner side elevational view of the holster and showing in dotted lines the turning range of the holster.

FIG. 6 is an exploded perspective view of parts of the holster and swivel coupling.

FIG. 7 and FIG. 8 are sectional views on an enlarged scale taken on lines 7—7 and 8—8, respectively, of FIG. 1.

Referring to the drawings, there is shown a leather holster 10 including a front, tapered, internally concave wall 12 defining with rear wall 14 an open top pocket for receiving and supporting a pistol, revolver or other firearm. The walls 12, 14 are secured together by stitching 15 and rivet 16. The rear wall has an upper extension 14^a extending upwardly beyond the upper end of front wall 12, and a reinforcement front leather facing 14^b is secured by stitching 17 to the rear wall extension 14^a. Registering holes 18^a, 18^b are provided in the wall extension 14^a and facing 14^b.

Through the holes 18^a, 18^b extends shank 19 of a bolt 20. The bolt has a large, circular head 21 with a flat annular side 21^a juxtaposed to the outer or front side of facing 14^b; see FIG. 7. The bolt forms part of the swivel

joint according to the invention. Shank 19 has a threaded end 19^a on which is engaged a circular nut 22. The outer side 21^b of head 21 has a rounded edge 21^c.

In order to support the holster on a belt or strap S generally worn by a police officer, guard or other person authorized to carry a pistol, there is provided a strong leather loop 25. This loop has an upper bight 26 engageable on the belt or strap and two juxtaposed walls 27^a, 27^b secured together by stitching 29 at their edges. Registering holes 28^a, 28^b are formed in the walls 27^a, 27^b, respectively, and shank 19 of the bolt extends through these holes. Nut 22 bears on the rear outer side of rear wall 27^a; see FIGS. 7 and 8. The free end 19' of shank 19 can be spread or peened to prevent the nut from coming off of the shank 19.

The swivel joint in addition to bolt 20 and nut 22, includes two identical circular plates 30^a and 30^b. Plate 30^a has a slightly concave side 31 and an opposite slightly convex side 32. Side 32 faces the inner or rear side of wall extension 14^a. Two circular apertured bosses 33 are integrally formed in plate 30^a at diametrically opposed positions. These bosses project outwardly of convex side 32 and engage in holes 34 formed in wall extension 14^a of the holster. Thus plate 30^a is held nonrotatably against the holster. Plate 30^a has a central hole 36 through which passes shank 19 of bolt 20. An arcuate annular flange 35 extends outwardly of concave side 31 of plate 30^a at its periphery. This flange extends about 90°. The center of flange 35 is aligned radially with the centers of apertured bosses 33 and the hole 36.

The concave side 31 of plate 30^a faces similarly formed concave side 31^a of plate 30^b. Plate 30^b has an arcuate annular flange 35^a extending outwardly of concave side 31^a at the periphery of plate 30^b. This flange overlaps the periphery of plate 30^a while flange 35 overlaps the periphery of plate 30^b. Since the concave sides 31, 31^a of the plates face each other, only the peripheries of the plate sides actually contact each other to minimize friction when the plates turn angularly with respect to each other.

Plate 30^b has a central hole 36^a through which passes shank 19 of bolt 20. Two bosses 33^a are formed in plate 30^b and extend outwardly of the convex side 32^a of the plate. These bosses are disposed in alignment diametrally of the plate 30^b and are aligned with the center of flange 35^a. Bosses 33^a are seated or engaged in holes 40 formed in the front wall 27^b of loop 25 so that plate 30^b is nonrotatable with respect to the loop. However, the holster 10 is rotatable with respect to the loop since plates 30^a, 30^b are rotatable with respect to each other. As shown in FIG. 5, the holster is limited to turning movements or rotation about the axis of bolt 20 to an angle A of slightly less than 180° between dotted line positions P_L and P_R. The holster can turn from the solid line depending position P_C to the left as viewed in FIG. 5 about 90° and can turn to the right slightly less than 90°. Since FIG. 5 is a rear view of the holster, turning the holster clockwise to the left is equivalent to turning the holster forwardly of the wearer in direction F as indicated in FIG. 1 and turning the holster counterclockwise to the right as viewed in FIG. 5 is equivalent to turning the holster rearwardly in direction F' of FIG. 1. It will be apparent that the turning movements of the holster are limited by engagement of end E of flange 35 with end EE of flange 35^a in one extreme position of the holster and by engagement of end E' of flange 35 with end EE' of flange 35^a in the other extreme position of the holster; see FIGS. 3 and 4. In FIG. 3 the flanges 35, 35^a are shown at their maximum angular spacing from each other with the holster in vertical depending position P_C

of FIG. 5. FIG. 4 shows the flanges 35, 35ª in one extreme position with edges E, EE in contact.

When the holster rotates between its two extreme positions, loop 25 and plate 30ᵇ remain stationary but bolt 20, nut 22 and plate 30ª of the swivel joint rotate with the holster.

A flap 41 may be secured by stitching 42 and rivets 43 to the rear side of loop wall 27ª to cover the nut 22 and free end 19' of the shank, to protect the wearer's clothing from rubbing or engaging on these parts and preventing their free turning with the holster.

There has thus been provided according to the invention a simplified swivel joint and coupling of a holster to a strap loop. The holes 40 and 34 formed in the loop wall 27ᵇ and holster extension 14ª in which the bosses 33ª and 33 are engaged keep the plates securely anchored after the nut 22 is properly tightened on the bolt. The nut should be sufficiently tight to keep the bosses engaged in the holes 34, 40 but not so tight as to prevent the bolt, nut and plate 30ª from turning with respect to plate 30ᵇ.

The plate parts of the swivel joint or coupling are very economically manufactured on high speed metal working punch presses. Since the plates 30ª, 30ᵇ are identical, a further economy is effected in manufacture. The parts are easily assembled as indicated by the exploded view of FIG. 6.

If desired, a very light application of lubricating oil, no more than a drop, may be applied to plates 30ª, 30ᵇ to lubricate the facing peripheral edges of the plates. No other maintenance of the parts is required. The several parts of the swivel joint may be made of brass, stainless steel, copper, or other metals or alloys, plated or unplated.

While we have illustrated and described the preferred embodiment of our invention, it is to be understood that we do not limit ourselves to the precise construction herein disclosed and that various changes and modifications may be made within the scope of the invention as defined in the appended claims.

Having thus described our invention, what we claim as new, and desire to secure by United States Letters Patent is:

1. A swivel joint coupling for a rotatable pocket and stationary loop of a holster assembly, comprising a bolt having a shank with a flat head at one end of the shank, the other end of the shank being threaded, a nut engaged on said other end of the shank, a pair of circular plates having aligned central holes, said plates being disposed adjacent each other between said head and nut and with said shank passing through the central holes in the plates, one of said plates having an arcuate flange on the periphery thereof extending away from one side of the one plate toward the other plate to overlap the periphery thereof, the other of said plates having another arcuate flange on the periphery thereof extending away from one side of said other plate toward the one plate to overlap the periphery thereof, the other side of the one plate having outwardly extending projections for engaging nonrotatably on said pocket, the other side of the other plate having outwardly extending projections for engaging nonrotatably on said loop, whereby turning movements of the one plate with respect to the other plate in opposite directions are limited by engagement of edges of the flanges of the plates in two extreme positions of rotation of the one plate with respect to the other plate, the one side of said one plate and the one side of the other plate both being concave so that the one sides of the plates contact each other only at their peripheries to minimize turning friction therebetween, the projections on the other side of each plate being a pair of bosses disposed in diametral alignment with the center of the arcuate flange thereon and with the central hole in the plate located between the bosses.

2. In a holster assembly, in combination, front and rear walls defining an open top pocket for a firearm, said rear wall having an extension extending upwardly beyond the front wall and having a front facing attached to the extension with registering holes in the extension and facing, a loop for supporting the pocket on a belt, said loop having front and rear other walls attached together with other registering holes therein, and a swivel coupling joining the loop and pocket, said coupling comprising a bolt having a shank extending through the registering holes in sid extension and facing and the front and rear walls of the loop, a head at one end of the shank juxtaposed to said facing, a nut engaged on the other end of the shank and juxtaposed to the rear wall of the loop, a first circular plate having at least one projection extending forwardly from one side of the plate and engaged on said extension so that the plate is nonrotatable with respect to the pocket, said plate having an arcuate flange extending rearwardly from the periphery of the other side thereof, and a second circular plate having at least one other projection extending rearwardly from one side thereof and engaged on the front wall of the loop so that the second plate is nonrotatable with respect to the loop, said second plate having another arcuate flange extending forwardly from the periphery of the other side thereof and overlapping the periphery of the first plate while the flange of the first plate overlaps the periphery of the second plate with the other sides of the first and second plates facing each other, the first and second plates having aligned central holes, said shank extending through the central holes in the plates, whereby turning of said pocket with respect to said loop is limited to an angle determined by the arcuate lengths of the flanges on the plates, said other sides of the plates being concave so that the other sides thereof rotatably contact each other only at the peripheries thereof to minimize turning friction between the plates.

References Cited by the Examiner

UNITED STATES PATENTS

3,117,708 1/64 Goldman ---------- 224—2.2

HUGO O. SCHULZ, *Primary Examiner.*