J. E. DAVIDSON.

TYPEWRITING MACHINE.

APPLICATION FILED SEPT. 11, 1918.

1,419,617. Patented June 13, 1922.

2 SHEETS—SHEET 1.

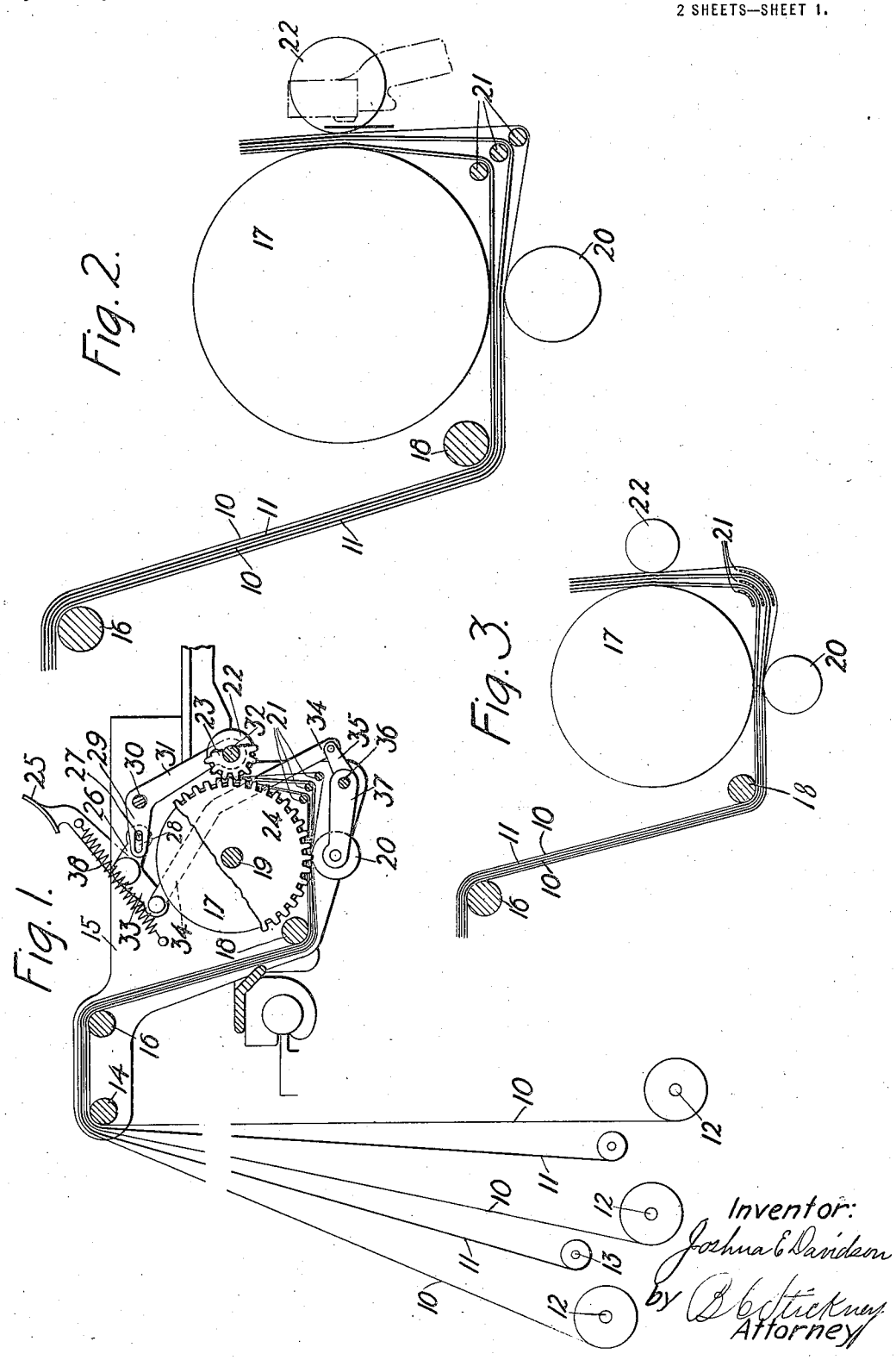

J. E. DAVIDSON.

TYPEWRITING MACHINE.

APPLICATION FILED SEPT. 11, 1918.

1,419,617.

Patented June 13, 1922.

2 SHEETS—SHEET 2.

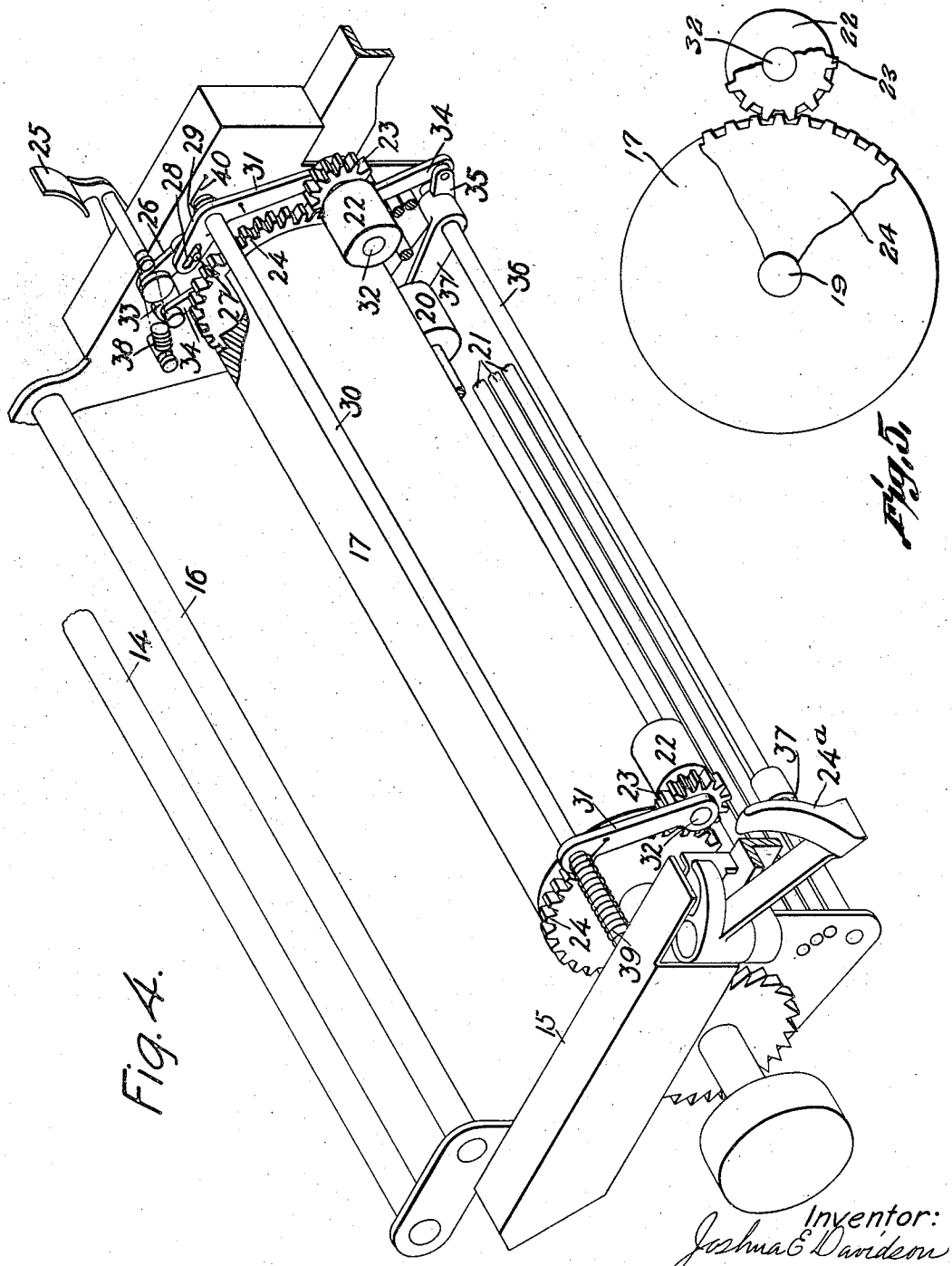

Fig. 4.

Fig. 5.

Inventor:
Joshua E. Davidson
by B. B. Stickney
Attorney

UNITED STATES PATENT OFFICE.

JOSHUA E. DAVIDSON, OF NEW YORK, N. Y., ASSIGNOR TO UNDERWOOD TYPEWRITER COMPANY, OF NEW YORK, N. Y., A CORPORATION OF DELAWARE.

TYPEWRITING MACHINE.

1,419,617. Specification of Letters Patent. Patented June 13, 1922.

Application filed September 11, 1918. Serial No. 253,492.

To all whom it may concern:

Be it known that I, JOSHUA E. DAVIDSON, a citizen of the United States, residing in the borough of the Bronx, in the county of the Bronx, city and State of New York, have invented certain new and useful Improvements in Typewriting Machines, of which the following is a specification.

This invention relates to typewriting machines in which the work consists of superposed plies of web which are fed around a revoluble platen. These plies with the interleaved carbons sometimes make a thick sheet or pack, and in feeding around the platen there is set up a tendency of the plies to creep upon one another, the outer ply being apt to travel more rapidly than the inner ply, owing to the greater distance of the outer ply from the axis of rotation of the platen. The plies and carbons when feeding around the platen make practically a body which is solid with the platen, thus setting up a difference in rate of travel of the different plies. This solidity is due to the friction of the plies and carbons upon one another, which precludes slipping of the sheets upon one another, so that the pack moves around the platen as if all made in one piece.

While this relative creeping would not be objectionable for a short sheet, still it is found that in typing a long web, the creeping accumulates to such an extent that the corresponding forms printed upon the several webs becomes seriously out of register with one another.

One of the principal objects of the present invention is to overcome this creeping, and to this end I contrive to avoid the frictional contact of the plies upon one another as they feed around the platen; and I provide at the printing line means to co-operate with the platen to carry the work positively past the printing point in such a manner that all of the plies feed at the same speed. The pack is not bent upon the platen in a manner to cause the sheets to grip one another and feed as a solid body.

In the preferred manner of practicing the invention, the sheets are led into the typewriting machine over a horizontal cross-bar, from which they descend and turn forwardly under another bar at about the level of the bottom of the platen; thence they run forwardly under the platen and beyond the same to a series of separate horizontal guide-bars, one of which may be provided for each ply of web; and over these front individual guide-bars the sheets turn and run upwardly to the front of the platen, against which they are held by rolls. These rolls may be geared to the platen for positively feeding the outer sheets at the same surface or linear speed as the inner sheets. Hence the sheets pass the printing line at a uniform speed, and the usual friction is not set up among the sheets or plies, nor do they bind together around the platen, and there is no tendency for the outer sheets to travel faster than the inner; and hence there is little, if any, accumulative creeping as the plies of web feed through the machine.

Other features and advantages will hereinafter appear.

In the accompanying drawings,

Figure 1 is a sectional side elevation of an Underwood front-strike typewriting machine, modified to illustrate the present improvements in one form; the plies and carbons being shown as led into the machine from any suitable source of supply, and as being conducted around the platen and up to the printing point in the manner already explained.

Figure 2 is an enlarged diagram, showing the relationship of the sheets and platen substantially as at Figure 1.

Figure 3 is a view similar to Figure 2, but showing a different form of front guide-bars over which the sheets turn to run up to the printing point.

Figure 4 is a perspective front view of the typewriter carriage seen at Figure 1.

Figure 5 is an enlarged detail side view of a portion of Figure 1, and shows the relation of the platen and the feed-rolls at the front thereof with respect to the gearing therebetween.

The webs 10 and interleaved carbons 11 may be led into the machine from any suitable source of supply, as for example in the manner shown in the Wernery and Smith Patent No. 1,132,055. In the drawings there are shown, for the purpose of illustration, spools 12 of work-web and spools 13 of interleaving carbon. All of these webs or plies are led up into the machine over a horizontal cross-bar 14 at the rear of the typewriter carriage 15, from which they run forwardly to another cross-bar 16 also provided upon said carriage, and

thence downwardly behind the platen 17 and under a lower horizontal cross-bar 18, under which the webs run forwardly at about the level of the bottom of the platen 17, which is mounted by means of an axle 19 in the end plates of the carriage 15.

A spring-pressed roll or set of rolls 20 may be arranged to press the forwardly traveling sheets against the bottom of the revolving platen; although in practicing my invention in some cases this bottom roll may be omitted.

The sheets run forwardly horizontally to individual cross guide-bars 21 extending horizontally from end to end of the carriage or platen frame, there being preferably one of these guide-bars for each ply of the web; and the webs turn under these guide-bars and run up about vertically to the platen, with which they contact at the printing point or line. Each of these individual bars 21 may serve both for its work-web 10 and its associated carbon 11; the work-web remaining in contact with the individual bar, and the carbon-web facing the work-web.

At the front of the platen 17 the work is gripped by a pair of feed-rolls 22, which may be arranged one at each end of the platen, outside of the printing field. Each roll may have a pinion 23, and these pinions may mesh with gears 24 fixed upon the platen axle, at a little distance from the platen whereby these front rolls are positively driven at about the same surface speed as the platen, and serve as the principal controllers of the work; although the bottom rolls 20 may help to pull the webs off from the spools and advance them to the carriage, at the operation of the line-spacing lever 24^a. The bottom rolls, while aiding in this way, need not positively control the work, since in this form of the invention they are preferably not geared to the platen.

By means of a release key 25, provided upon the carriage, both the front rolls 22 and the bottom rolls 20 may be cast off to release the sheets; said release key having an arm 26 connected by a pin 27 and slot 28 to an arm 29 whose forward end is fixed upon a rock-shaft 30, which is journaled in the ends of the platen frame and carries a pair of forwardly and downwardly extending arms 31, which carry studs 32 extending towards each other and upon which the front rolls 22 are journaled. Another arm 33 upon the release key is connected by a link 34 to a short arm 35 which extends forwardly from a rock-shaft 36 beneath the platen, which has rearwardly extending arms 37 to carry the bottom rolls 20; a suitable spring 38 being provided for the bottom rolls 20, and also springs 39, 40, for the front rolls 22.

Variations may be resorted to within the scope of the invention, and portions of the improvements may be used without others.

Having thus described my invention, I claim:

1. The combination with a revoluble platen, of means for turning the platen, means independent of the platen for guiding a plurality of separate superposed work-webs substantially rectilinear to the printing line on the platen, and driving means geared to the platen and co-operating with the turning platen at the printing line, adapted to grip said work-webs and feed them all at the same speed.

2. The combination with a revoluble platen, of means for conducting a plurality of separate superposed work-webs forwardly under the platen, and a sheet-guiding device mounted forwardly of the platen and adapted to guide the webs beneath it clear of the platen, and at a point between the bottom of the platen and the printing line.

3. The combination with a revoluble platen, of means for conducting a plurality of separate superposed work-webs forwardly under the platen, and a sheet-guiding device mounted forwardly of the platen and adapted to guide the webs beneath it clear of the platen, and at a point between the bottom of the platen and the printing line, means for turning the platen, and means co-operating with the turning platen at the printing line, adapted to grip the webs and feed them all at the same speed.

4. The combination with a revoluble platen, of means for conducting a plurality of separate superposed work-webs forwardly under the platen, and upwardly in front of it, said means including a feed-roll bearing against the platen, and also including means for directing the webs substantially rectilinearly past the platen at said feed-roll.

5. The combination with a revoluble platen, of a guide bar in rear thereof under which the sheets feed forwardly to and beneath the platen, and a guiding device mounted forwardly of the platen below the printing line and under which the sheets bend to run up to the printing line.

6. The combination with a revoluble platen, of a guide bar in rear thereof under which the sheets feed forwardly to and beneath the platen, a guiding device mounted forwardly of the platen below the printing line and under which the sheets bend to run up to the printing line, and means in the vicinity of the printing line for feeding superposed sheets at the same linear speed.

7. The combination with a revoluble platen, of means for conducting sheets forwardly under the platen, a sheet-guiding device under which the sheet runs between the

bottom of the platen and printing line, said sheet-guiding device mounted forwardly of the platen, means in the vicinity of the printing line of the platen for feeding superposed sheets at the same linear speed, and a paper-feeding roll to press the sheets in contact with the bottom of the platen.

8. The combination with a revoluble platen, of a guide bar in rear thereof under which the sheets feed forwardly to and beneath the platen, a guiding device mounted forwardly of the platen below the printing line and under which the sheets bend to run up to the printing line, means in the vicinity of the printing line for feeding superposed sheets at the same linear speed, and a paper-feeding roll to press the sheets in contact with the bottom of the platen.

9. The combination with a revoluble platen, of means for conducting sheets forwardly under the platen, a sheet-guiding device under which the sheet runs between the bottom of the platen and printing line, said sheet-guiding device mounted forwardly of the platen, and means in the vicinity of the printing line of the platen for feeding superposed sheets at the same linear speed, said sheet-guiding device comprising a plurality of separate guiding bars over which work-sheets may run out of contact with one another.

10. The combination with a revoluble platen, of means for conducting sheets forwardly under the platen, a sheet-guiding device under which the sheet runs between the bottom of the platen and printing line, said sheet-guiding device mounted forwardly of the platen, and means in the vicinity of the printing line of the platen for feeding superposed sheets at the same linear speed, said sheet-guiding device comprising a plurality of separate guiding bars over which work-sheets may run out of contact with one another, said bars in the form of segments or shells nested together.

11. The combination with a revoluble platen, of means for conducting sheets forwardly under the platen, a sheet-guiding device under which the sheet runs between the bottom of the platen and printing line, said sheet-guiding device mounted forwardly of the platen and adapted to guide sheets substantially rectilinearly to the printing line, and rolls mounted on the printing line at the ends of the platen to press the sheets against the platen.

12. The combination with a revoluble platen, of a guide bar in rear thereof under which the sheets feed forwardly to and beneath the platen, a guiding device mounted forwardly of the platen below the printing line and under which the sheets bend to run up to the printing line, and rolls mounted on the printing line at the ends of the platen to press the sheets against the platen.

13. The combination with a revoluble platen, of means for conducting sheets forwardly under the platen, a sheet-guiding device under which the sheet runs between the bottom of the platen and printing line, said sheet-guiding device mounted forwardly of the platen, rolls mounted on the printing line at the ends of the platen to press the sheets against the platen, and gearing at the ends of the platen to connect the platen to said rolls.

14. The combination with a revoluble platen, of means for conducting sheets forwardly under the platen, a sheet-guiding device under which the sheet runs between the bottom of the platen and printing line, said sheet-guiding device mounted forwardly of the platen, rolls mounted on the printing line at the ends of the platen to press the sheets against the platen, and means to release said rolls simultaneously.

15. The combination with a revoluble platen, of means for conducting sheets forwardly under the platen, a sheet-guiding device under which the sheet runs between the bottom of the platen and printing line, said sheet-guiding device mounted forwardly of the platen, means in the vicinity of the printing line of the platen for feeding superposed sheets at the same linear speed, paper-feeding rolls to press the sheets in contact with the bottom of the platen, rolls mounted on the printing line at the ends of the platen to press the sheets against the platen, and means to release said front rolls and said bottom rolls simultaneously.

16. The combination with a revoluble platen and a platen frame, of a guide bar in rear of the platen over which the sheets bend to run downwardly, a guide bar in the rear of the lower portion of the platen under which the sheets bend to run forwardly, front individual guide bars forward of the lower portion of the platen, and feed rolls running upon the platen at about the printing line.

17. The combination with a revoluble platen and a platen frame, of a guide bar in rear of the platen over which the sheets bend to run downwardly, a guide bar in the rear of the lower portion of the platen under which the sheets bend to run forwardly, front individual guide bars forward of the lower portion of the platen, feed rolls running upon the platen at about printing line, and rolls to press the sheets against the bottom of the platen.

18. The combination with a revoluble platen and a platen frame, of a guide bar in rear of the platen over which the sheets bend to run downwardly, a guide bar in the rear of the lower portion of the platen under which the sheets bend to run forwardly, front individual guide bars forward of the lower portion of the platen, feed rolls run-

ning upon the platen at about the printing line, and means to release said rolls.

19. The combination with a revoluble platen and a platen frame, of a guide bar in rear of the platen over which the sheets bend to run downwardly, a guide bar in the rear of the lower portion of the platen under which the sheets bend to run forwardly, front individual guide bars forward of the lower portion of the platen, feed rolls running upon the platen at about the printing line, rolls to press the sheets against the bottom of the platen, and means to release all of said rolls simultaneously.

20. The combination of a revoluble platen having gears at its ends, feed rolls to run upon the platen at the ends thereof, substantially at the printing line, devices clear of the printing line for supporting said rolls, yielding means being provided for holding said rolls against the platen, and pinions connected to said feed rolls and meshing with said gears.

21. The combination of a revoluble platen having gears at its ends, feed rolls to run upon the platen at the ends thereof, substantially at the printing line, pinions connected to said feed rolls and meshing with said gears, a stud adjacent each end of the platen upon which its pinion and roll are mounted, arms carrying said studs, a rock-shaft clear of the printing line and carrying said arms, yielding means effective on said arms for holding the rolls against the platen, and a release key connected to said rock-shaft.

22. The combination of a revoluble platen having gears at its ends, feed rolls to run upon the platen at the ends thereof, substantially at the printing line, yielding means being provided for holding said rolls against the platen, pinions connected to said feed rolls and meshing with said gears, studs upon which said pinions and rolls are mounted, arms carrying said studs, a rock-shaft carrying said arms, a release key connected to said rock-shaft, independently-revoluble rolls to press the sheets against the bottom of the platen, and connections between said bottom rolls and said release key.

23. The combination with a revoluble platen, of means independent of the platen for directing a plurality of separate superposed work-webs substantially rectilinearly to the printing line on the platen, and means connected with the platen to move at the same linear speed and co-operative therewith at the printing line to feed said work-webs all substantially at the same speed.

JOSHUA E. DAVIDSON.

Witnesses:
CATHERINE A. NEWELL,
MARION R. MCCAFFREY.