Oct. 4, 1955 G. SLAYTER ET AL 2,719,350

METHOD AND APPARATUS FOR PACKAGING A CONTINUOUSLY AVAILABLE STRAND

Filed Aug. 20, 1953 8 Sheets-Sheet 1

FIG. 1.

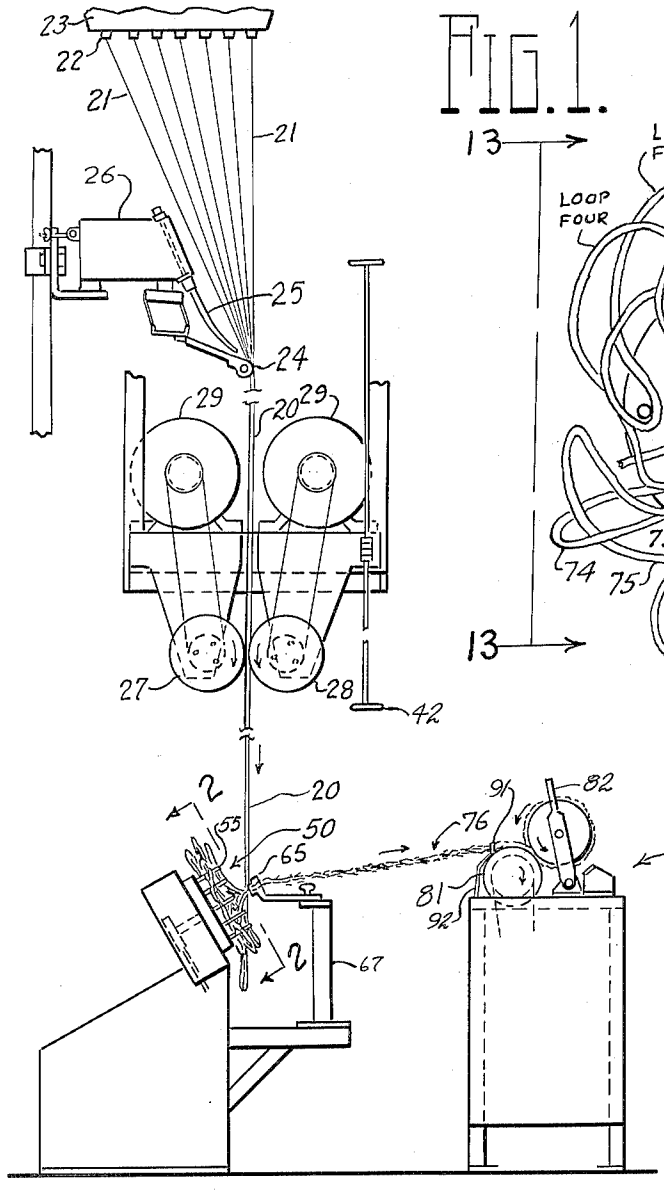

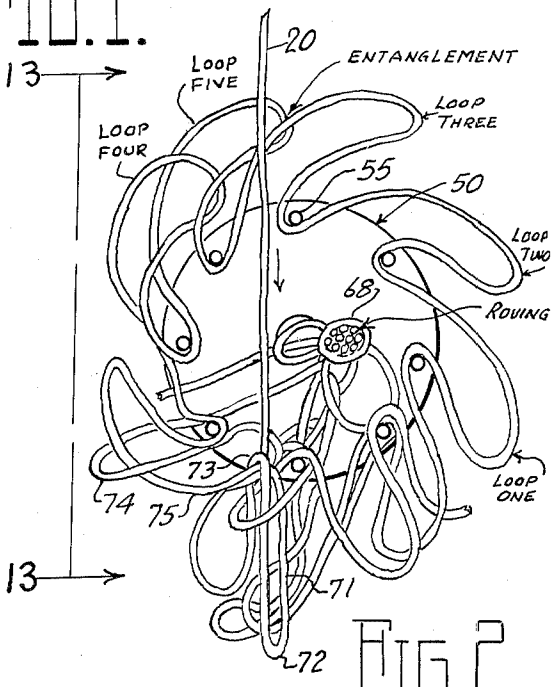

FIG. 2.

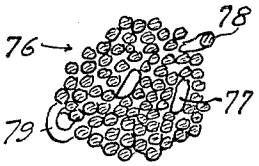

FIG. 3a.

FIG. 3.

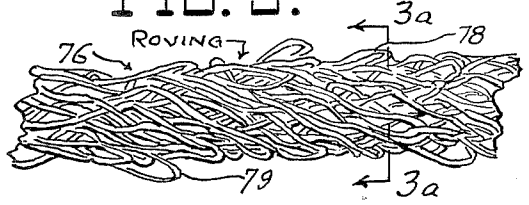

Inventors
Games Slayter
Warren Wendell Drummond

By Stallin and Overman

Attorneys

Oct. 4, 1955 G. SLAYTER ET AL 2,719,350

METHOD AND APPARATUS FOR PACKAGING
A CONTINUOUSLY AVAILABLE STRAND

Filed Aug. 20, 1953 8 Sheets-Sheet 2

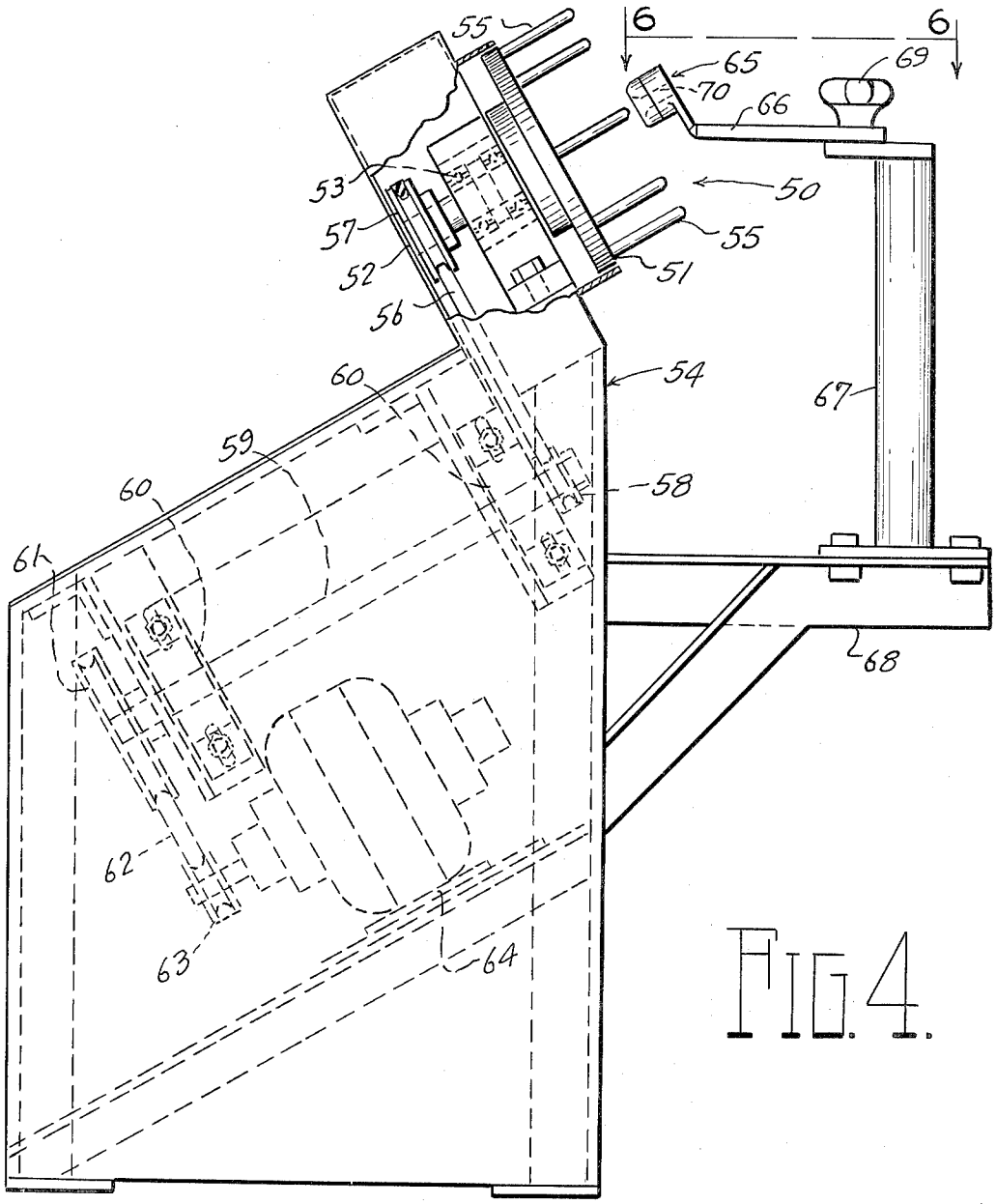

FIG. 4.

Inventors
Games Slayter
Warren Wendell Drummond

By Staelin & Overman
Attorneys

Oct. 4, 1955 G. SLAYTER ET AL 2,719,350

METHOD AND APPARATUS FOR PACKAGING
A CONTINUOUSLY AVAILABLE STRAND

Filed Aug. 20, 1953 8 Sheets-Sheet 3

FIG. 5.

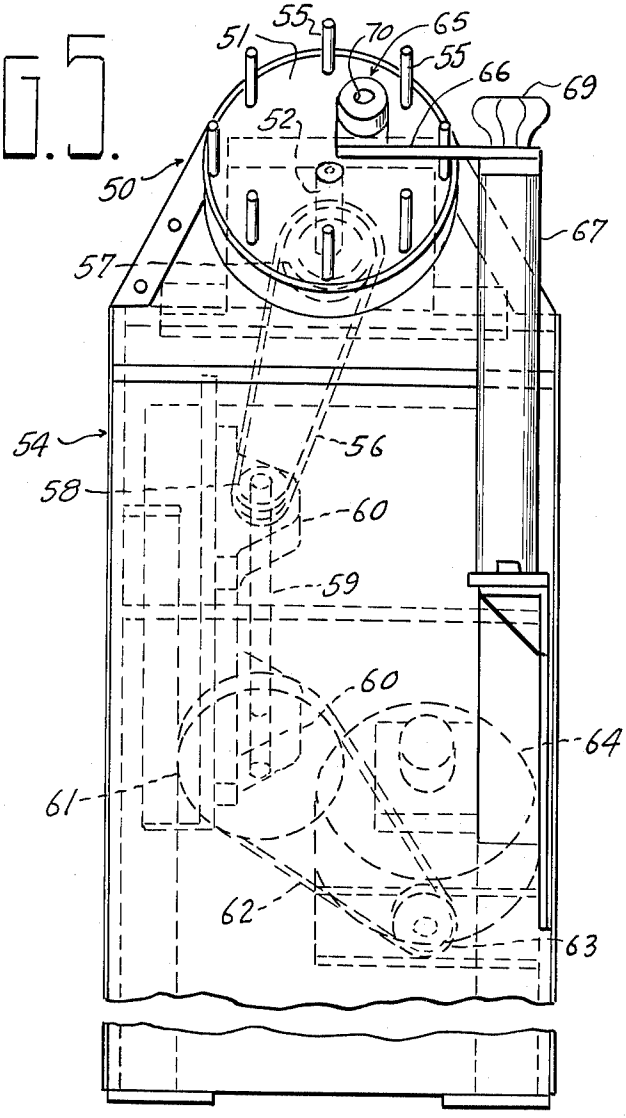

FIG. 6.

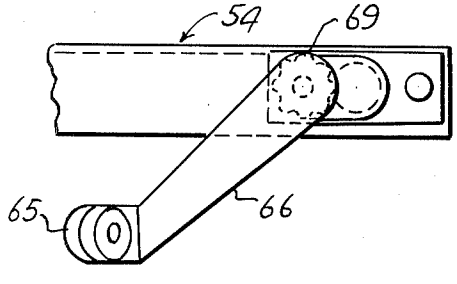

Inventors
Games Slayter
Warren Wendell Drummond

By Staelin and Overman

Attorneys

Oct. 4, 1955 G. SLAYTER ET AL 2,719,350

METHOD AND APPARATUS FOR PACKAGING
A CONTINUOUSLY AVAILABLE STRAND

Filed Aug. 20, 1953 8 Sheets-Sheet 4

FIG. 7.

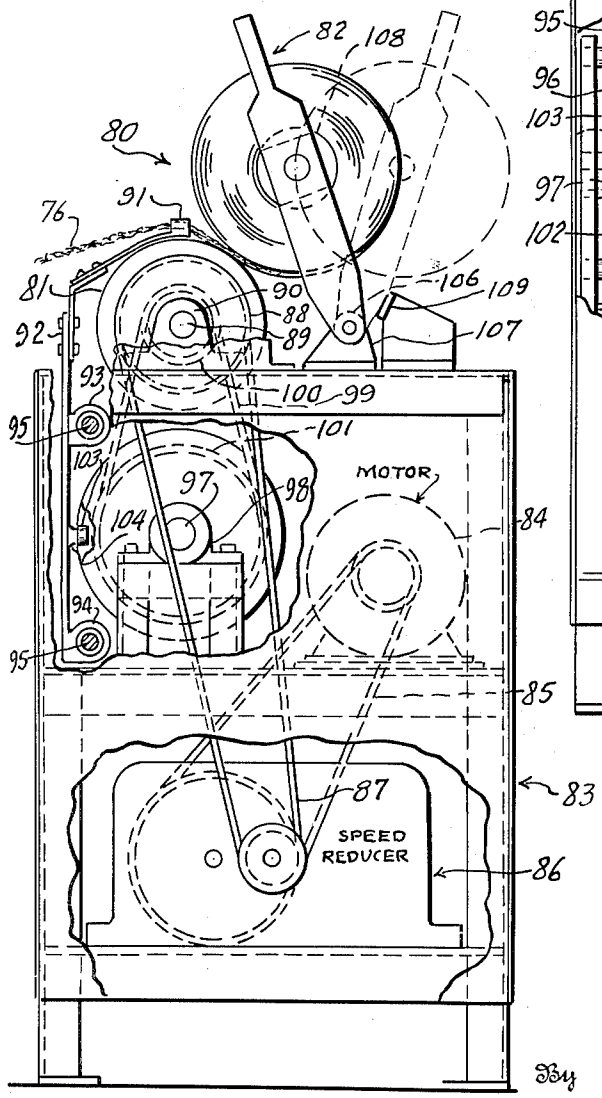

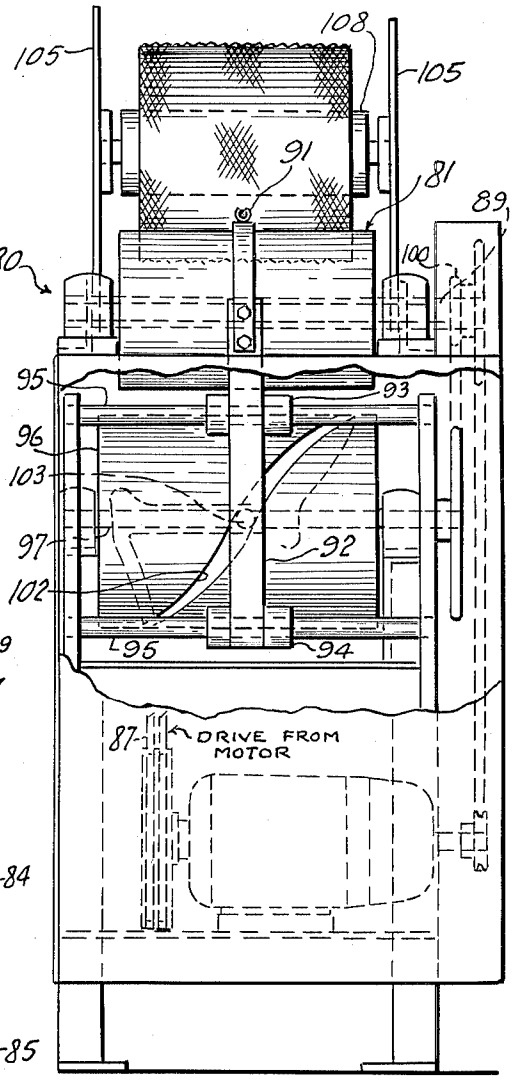

FIG. 8.

Inventors
Games Slayter
Warren Wendell Drummond

By Staelin and Overman
Attorneys

Oct. 4, 1955 G. SLAYTER ET AL 2,719,350

METHOD AND APPARATUS FOR PACKAGING A CONTINUOUSLY AVAILABLE STRAND

Filed Aug. 20, 1953 8 Sheets-Sheet 5

FIG. 9.

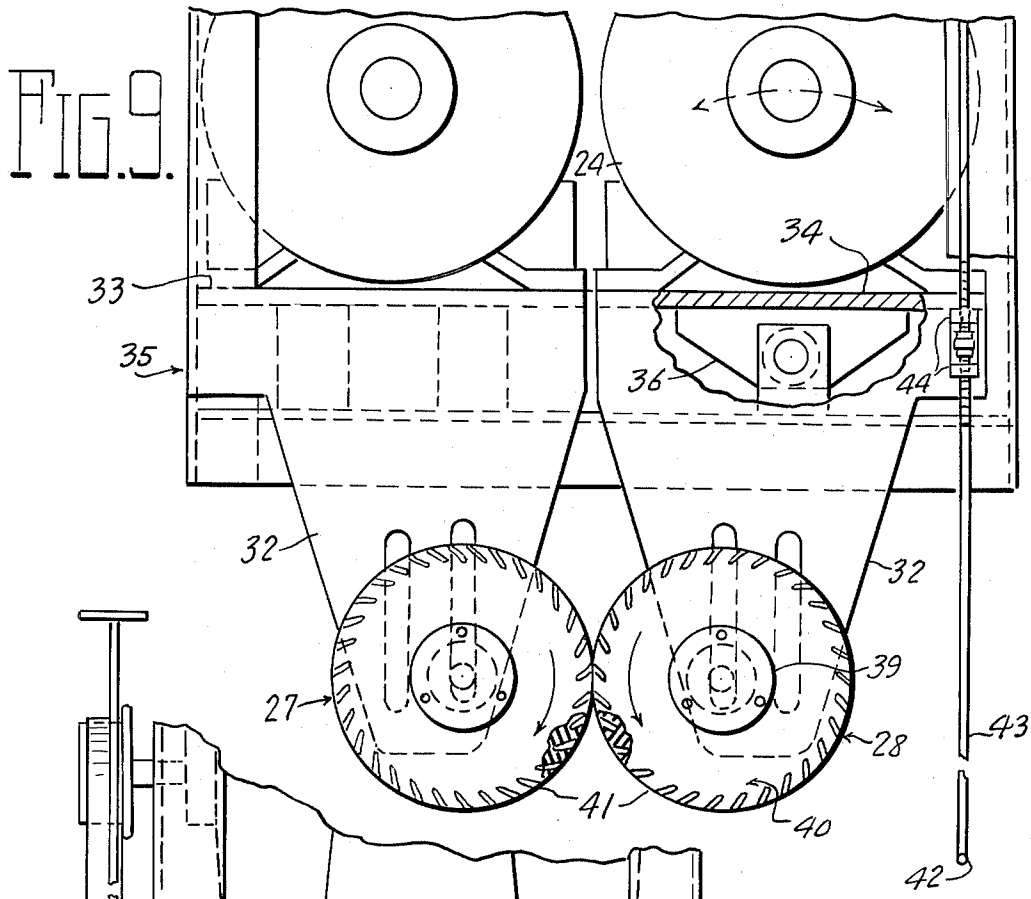

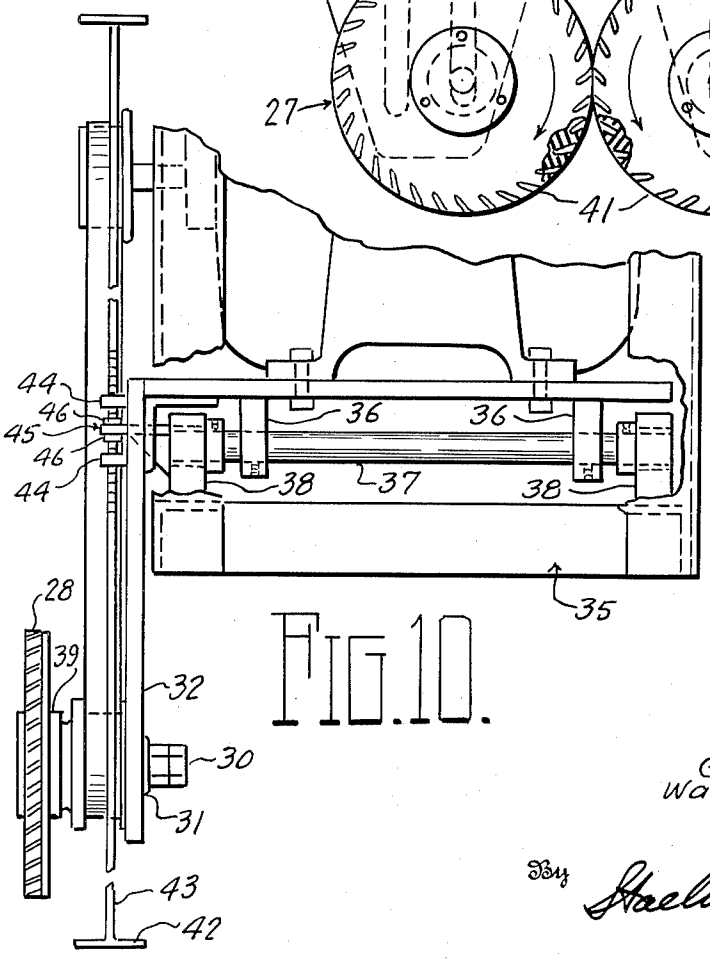

FIG. 10.

Inventors
Games Slayter
Warren Wendell Drummond

By Shelton and Overman
Attorneys

Oct. 4, 1955 G. SLAYTER ET AL 2,719,350

METHOD AND APPARATUS FOR PACKAGING A CONTINUOUSLY AVAILABLE STRAND

Filed Aug. 20, 1953 8 Sheets-Sheet 6

FIG. 11.

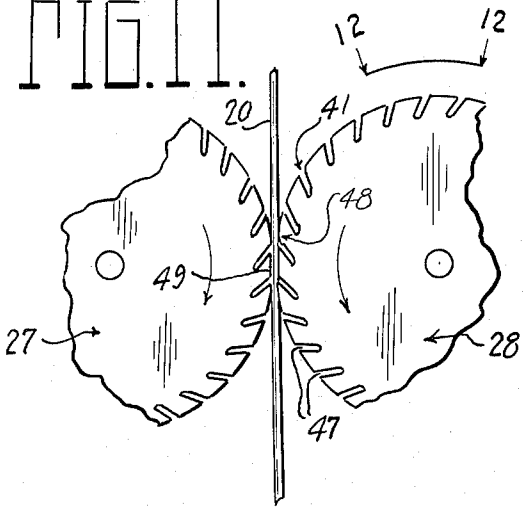

FIG. 12.

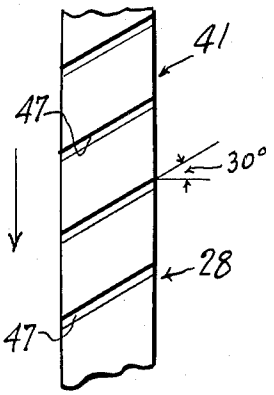

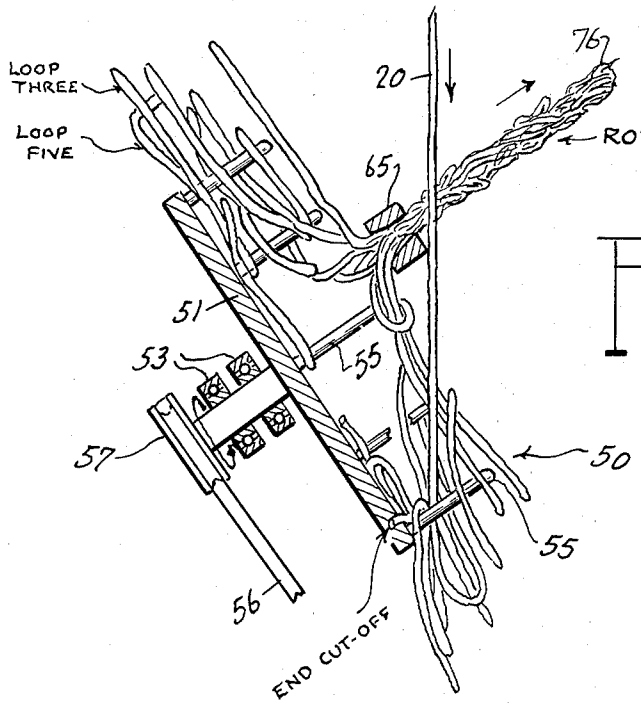

FIG. 13.

INVENTORS
Games Slayter
BY Warren Wendell Drummond
Scofield and Queeman
ATTORNEYS

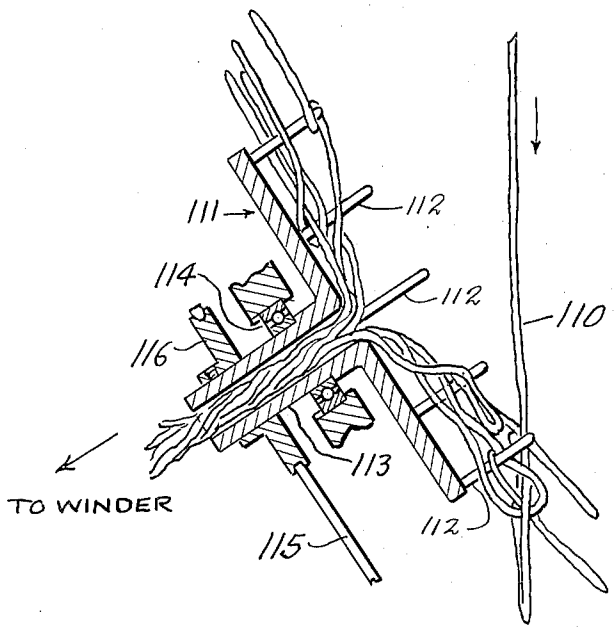

FIG. 14.

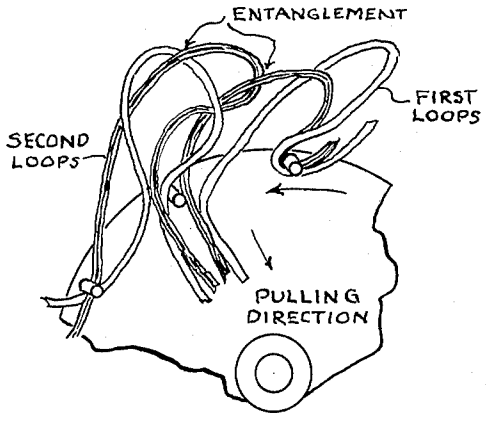

FIG. 15.

FIG. 16.

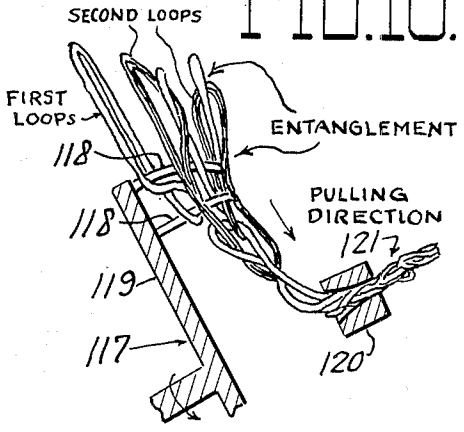

INVENTORS
Games Slayter
BY Warren Wendell Drummond
Staelin and Overman
ATTORNEYS

Oct. 4, 1955 G. SLAYTER ET AL 2,719,350

METHOD AND APPARATUS FOR PACKAGING A CONTINUOUSLY AVAILABLE STRAND

Filed Aug. 20, 1953 8 Sheets-Sheet 8

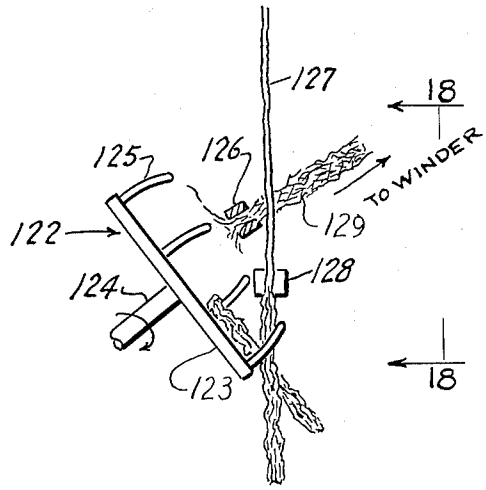

FIG. 17.

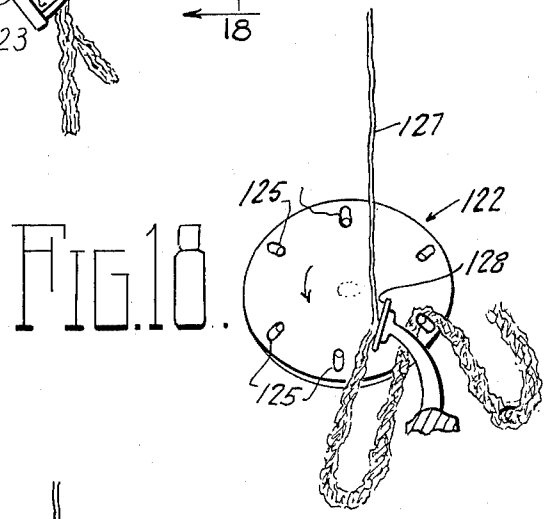

FIG. 18.

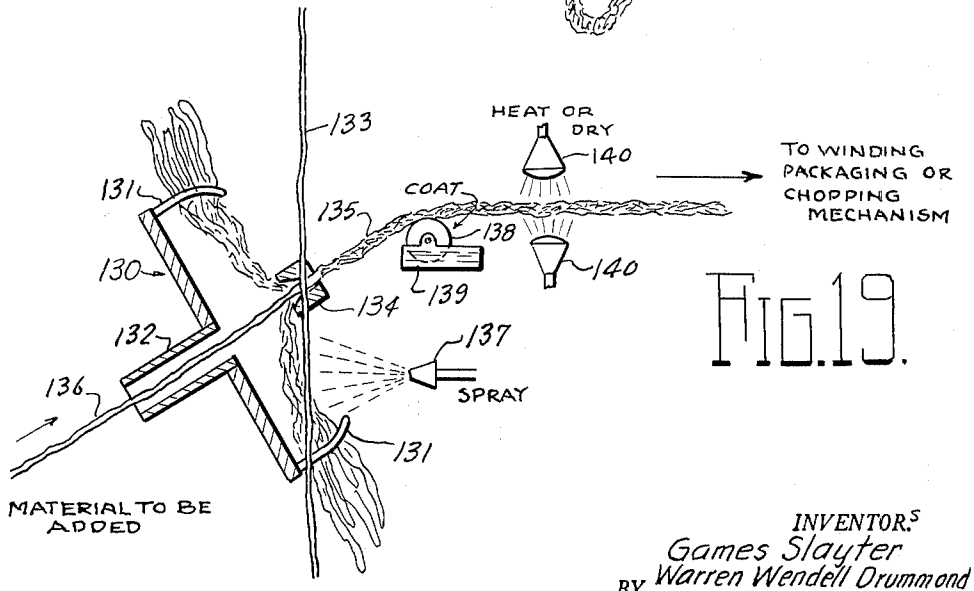

FIG. 19.

INVENTORS
Games Slayter
Warren Wendell Drummond
BY Haelin and Overman
ATTORNEYS

United States Patent Office 2,719,350
Patented Oct. 4, 1955

2,719,350

METHOD AND APPARATUS FOR PACKAGING A CONTINUOUSLY AVAILABLE STRAND

Games Slayter, Newark, Ohio, and Warren Wendell Drummond, Anderson, S. C., assignors to Owens-Corning Fiberglas Corporation, Toledo, Ohio, a corporation of Delaware

Application August 20, 1953, Serial No. 375,316

19 Claims. (Cl. 28—1)

This invention relates to the packaging of continuous filaments or strands made up of groups of associated filaments, which are produced or made available for delivery to packaging mechanism, at a high linear rate.

When a strand is produced or delivered at a high rate of speed, for example, in the order of 10,000 feet per minute, as is the case in the commercial production of glass fiber strands, or at other similar speeds, as is the case with other synthetic strands such as rayon, nylon, or with strands or cords of natural fibers, one of the most difficult problems to solve is that of slowing down the rate of travel linearly in order to allow the strand to be accumulated into a sufficient mass to form a package which can subsequently be handled.

Frequently, continuously produced or delivered strands are wound upon high speed rotary spools or bobbins equipped with flyers or traversers which feed the strands onto the rotary packages, laying up successive spiral layers as the packages rotate. In a package of this type the tension on the strand increases as the package builds up and exerts compressive force inwardly which tends to crush or collapse the package, requiring an expansible collet or other means to prevent such collapse, and to permit removal of the package after winding. Another difficulty arising from the compressive force, is that the successive layers of strand, filament or thread, are squeezed against each other so tightly that if the material is adhesive or if it is coated with an adhesive substance, successive loops frequently adhere to each other causing snarls which interfere with removal of the strand during unwinding.

Because of the extremely high lineal speed of production or delivery of a strand such as a glass fiber strand, it is impossible to associate a multiplicity of the strands into a single unified roving or bundle of strands at the time of their initial production. It is customary, therefore, to separately wind each strand upon its individual rotary package, to assemble a group of packages and then, operating at a lower lineal rate, to lead the individual strands, say, 40, 80 or more, together as a group for packaging as an integrated, heavier roving or bundle.

It is the principal object of this invention to provide a method and apparatus for the packaging of a continuously produced strand in the form of a roving or bundle, the cross section of which at any point reveals a multiple number of individual strands associated laterally with each other to form an enlarged mass.

It is another object of this invention to provide a method and apparatus for slowing down the lineal rate of movement of a continuously produced strand by repeatedly interrupting its linear movement to form successive "doublings" of the strand and progressively associating the "doublings" to increase the number of laterally associated lengths of the strand.

It is a further object of this invention to provide a method and apparatus for linearly projecting a continuous strand and for repeatedly interrupting the continuous linear projection of the strand by moving spaced

means across the path of the strand so that it is looped over these means in a series of loops and for then removing the strand from the loop forming means progressively and in the general order in which it is placed thereon, by moving the loops of strand in a direction generally away from a line extending between the means on which the strand is looped.

It is a more specific object of this invention to provide a method and apparatus for the manufacture of what might be termed a staggered, looped, roving, i. e., a mass of strands lying in generally parallel relationship at any cross section of the mass and consisting of a plurality of lapped loops gathered together continuously from a single strand.

It is a further object of this invention to provide a method and apparatus for the fabrication of a multiple strand roving or associated bundle of strands from a single linearly fed, continuous strand without the necessity for first winding the single strands on individual packages.

More specific objects and advantages of the invention will be better understood by reference to the specification which follows and to the drawings illustrating a commercial apparatus for the production of a roving or bundle according to the invention and schematically showing the operation of such apparatus. In these drawings:

Fig. 1 is a fragmentary view, in elevation and on a small scale, of apparatus for forming a continuous glass fiber strand, for feeding such a strand linearly at a high rate of speed, for interrupting the linear movement of the single strand and doubling it upon itself, for associating the accumulated "doublings" and for packaging such an accumulated, elongated mass of "doublings" as an integral multistrand bundle or roving.

Fig. 2 is an enlarged view taken substantially on the line 2—2 of Fig. 1 and showing an approximation of the actual strand doubling operation as performed in accordance with the method of and on apparatus embodying the invention.

Fig. 3 is a greatly enlarged view in elevation of a section of the bundle or roving of accumulated "doublings" of a single strand as fabricated according to the method and on apparatus embodying the invention.

Fig. 3*a* is a vertical sectional view taken substantially on the line 3*a*—3*a* of Fig. 3.

Fig. 4 is a fragmentary view in elevation and on a greatly enlarged scale, with parts broken away, of apparatus for doubling the linearly fed strand upon itself and for associating the staggered "doublings" with each other according to the invention.

Fig. 5 is a front view in elevation of the apparatus shown in Fig. 4.

Fig. 6 is a further enlarged, detailed, fragmentary plan view of a portion of the apparatus taken from the position indicated by the line 6—6 in Fig. 4.

Fig. 7 is a side elevational view with parts broken away of apparatus for winding the formed roving or bundle of strands to form a suitable package for subsequent handling.

Fig. 8 is a front view in elevation with parts broken away of the machine shown in Fig. 7.

Fig. 9 is a greatly enlarged view in elevation of apparatus for continuously drawing and projecting a continuous strand at a high lineal rate of speed into the strand doubling apparatus shown in Figs. 4 and 5.

Fig. 10 is a fragmentary side elevational view of the apparatus shown in Fig. 9.

Fig. 11 is a still further enlarged fragmentary view in elevation of strand feeding means as employed in the apparatus of Figs. 9 and 10.

Fig. 12 is an enlarged fragmentary view in elevation taken along the line 12—12 of Fig. 11.

Fig. 13 is a detailed view somewhat general in nature and taken from the position indicated by the line 13—13 of Fig. 2 illustrating the process of strand doubling and accumulation according to the invention.

Fig. 14 is a view similar to Fig. 13 but showing a modification in the manner of operation according to the invention.

Fig. 15 is a fragmentary view in elevation of a portion of the apparatus embodying the invention and illustrating a step in the process similar to that shown in Fig. 2 according to a modification of the invention.

Fig. 16 is a fragmentary side view in elevation of the apparatus shown in Fig. 15.

Fig. 17 is a fragmentary schematic view in side elevation illustrating yet another modification of the invention.

Fig. 18 is a front view of the operation depicted in Fig. 17.

Fig. 19 is a schematic view of a further modification of the process embodying the invention and illustrating the use of modified apparatus assembled according to the invention.

In order to explain the operation of the method and apparatus embodying the invention it will be described as it is understood to function with respect to a continuously produced glass fiber strand comprising, say, 200 individual filaments produced at a rate of approximately 10,000 to 11,000 feet per minute.

A glass fiber strand **20** (Fig. 1) may be produced by the accumulation of a number of individual glass fibers or filaments **21**. The filaments **21** are individually pulled by a rapid linear movement from streams of glass, each of which flows through a glass forming nipple **22** on the bottom of a melter **23** or other source for molten glass such as a tank. The filaments **21** are associated with each other by being led over a guide **24** in the form of an eye or a groove and which may be provided with a spout **25** for feeding a suitable binder or other coating, for example, water, from a supply tank **26** therefor.

After passing through the guide **24** the individual filaments **21** are associated into a parallel group forming the strand **20**. The strand **20** is then led downwardly between the peripheries of a pair of rotary pulling wheels **27** and **28** (see also Figs. 9–12) which are rotated at high speed by a pair of synchronous motors **29**.

Each of the pulling rollers **27** and **28** is mounted on an axle **30** which is rotatably journalled in an arbor **31** adjustably mounted on a plate **32** depending from a generally horizontal frame **33** or **34**. The frame **33** is fixedly positioned in a structure **35** mounted from the ceiling of the plant or from suitable supporting framework. The frame **34** has a pair of downwardly extending ears **36** which are fixed on a pipe **37** that is rockably mounted in a pair of bearing posts **38** that are fixedly mounted on the structure **35**. Thus the plate **32**, frame **34** and motor **29** associated therewith can be rocked on the axis of the pipe **37**.

Each of the pulling wheels **27** and **28** has a hub section **39**, a wheel section **40** and a tire **41**. The mounting plates **32** are so shaped and positioned relative to each other that the axes of the pulling wheels **27** and **28** are parallel and spaced apart a distance such that the peripheries of the pulling wheels **27** and **28**, i. e., the surfaces of their tires **41**, contact each other at a point lying in the plane passing through their axes.

The pressure between the tires **41** of the pulling wheels **27** and **28** may be adjusted by tilting the pulling wheel **28** and its associated structure on the axis of the pipe **37**. Adjustment of the tilting is accomplished by rotating a handle **42** fixed on the lower end of a vertically extending rod **43** which is threaded through a pair of ears **44** fixedly mounted on the structure and which extends through an arm **45** on the forward end of the frame **34**. A pair of collars **46** are pinned or otherwise secured to the rod **43** above and below the arm **45**.

The tires **41** of the pulling wheels **27** and **28** (see Figs. 11 and 12) have grooved surfaces. Grooves **47** are cut across the surfaces of the tires **41** at an angle of approximately 30° to an axially extending line and are cut into the surface of the tires **41** with their center lines lying at angles of approximately 30° to tangents to the surface of the tires at the points of intersection of the center lines of the grooves **47** therewith. The angles of the center lines extending into the tires **41** are inclined backwardly so that finger sections, for example, that section indicated by the reference numeral **48** in Fig. 11, are compressed radially slightly as they engage the strand **20** in the bite between the pulling wheels **27** and **28** and expand outwardly as they leave the bite between the wheels. Compressed fingers are indicated by the reference numbers **49** in Fig. 11 where their resiliency provides not only for a firm grasp on the strand being fed but also for the flipper-like action just described.

While pulling wheels designed according to the above description may be preferred for linearly projecting a continuous glass fiber strand, various other forms of high speed pulling wheels may be employed or other mechanisms may be designed which will produce a "driving" strand. The only requirement for the pulling wheel mechanism is that it feeds the strand **20** along a generally linear path continuously and with but little variation from the path over a distance, say, of three to four feet through the atmosphere. If great fluctuations in the path of the strand take place it may interfere with the operation of the mechanism now to be described.

"Doubling" apparatus

Referring again to Fig. 1, the strand **20** is projected downwardly into the path of a rotary peg spinner generally indicated at **50** (see also Figs. 2, 4, 5 and 13). In the embodiment of the apparatus disclosed in the mentioned figures the peg spinner **50** comprises a disk **51** (Fig. 4) mounted upon a shaft **52** which is rotatably journalled in bearings **53** in a frame **54**. As can be seen in Fig. 4 the axis of the shaft **52** is inclined to the horizontal with the disk **51** facing somewhat upwardly. The disk **51** carries a plurality of pegs **55** which are evenly spaced around its perimeter. In the embodiment shown in the figures mentioned there are eight of the pegs **55**, each of which is substantially straight and parallel to the axis on which the disk **51** rotates.

The disk **51** is rotated with its shaft **52** by a V-belt **56** engaged in a pulley **57** keyed or pinned on the shaft **52** and which is driven by a pulley **58** mounted on one end of a jackshaft **59** journalled in bearing blocks **60** mounted in the frame **54** below the peg spinner **50**. A second pulley **61** is secured on the lower end of the shaft **59** and driven by a V-belt **62** from a motor pulley **63** mounted on the shaft of a motor **64**. The driving ratio between the pulleys **63—61** and **58—57** is such as to produce a speed of rotation of the peg spinner **50** calculated in consideration of the lineal speed of the strand **20**, the number of pegs **55** on the peg spinner **50**, the degree of "doubling" desired in the finished product and the linear rate of packaging of the finished product. The relationships between these speeds and numbers will be explained below in the explanation of the process embodying the invention.

A gathering eye **65** is mounted on an adjustable arm **66** positioned on the top of a post **67** which is supported by a bracket **68** on the framework **54**. The arm **66** can be swung horizontally on the post **67** by loosening a hand wheel **69** for swinging the gathering eye **65** away from the operating post shown in the drawings. As can best be seen by reference to Figs. 2 and 4, the gathering eye **65** is positioned so that the axis of its funnel shaped bore **70** is parallel to the axis of the peg spinner **50** and spaced just to one side of the axis of the peg spinner **50**. The plane of the entering side of the gathering eye **65** is parallel to the plane of the ends of the pegs **55** and slightly removed therefrom in an axial direction.

"Doubling" operation

As can best be seen by reference to Figs. 2 and 13 the single continuously produced strand **20** is projected downwardly along a straight path intersecting the path of movement of the pegs **55** of the peg spinner **50** at a point near their bases and adjacent the lower edge of the rotating disk **51** of the peg spinner **50**. The line of projection of the strand **20** lies on the side of the axis of the peg spinner **50** opposite to that on which the axis of the gathering eye **65** is located and removed therefrom an approximately equal distance. As the strand **20** is projected downwardly along its linear path and the peg spinner **50** is rotated, the strand first projects through a space between two successive pegs **55**. As the peg spinner **50** rotates a little farther the following one of the two pegs **55** strikes the side of the linearly moving strand **20** and the strand **20** folds or loops over that one of the pegs **55**.

In Fig. 13 the strand **20** is shown looping over a peg **55** at the point indicated by the arrow bearing the legend "End Cut Off." In Fig. 13 the end of the strand at the point of looping over of the peg **55** has been shown cut off in order to prevent obstructing the view of that portion of the strand immediately behind it, that at this instant, becomes the driving section of the strand **20**.

When the strand loops over the peg **55** it develops a depending length indicated by the reference character **71** in Fig. 2 which is hung on the peg **55** and a loop **72** which moves downwardly as the strand **20** continues to drive. As the peg spinner **50** continues to rotate, a third peg **55** strikes the strand **20** and once again the strand **20** is laterally displaced, being looped over this successive peg **55**.

During one rotation of the peg spinner **50**, therefore, eight pegs **55** successively strike the strand **20** forming eight loops which initially depend between adjacent pegs **55**. Because the peg spinner **50** is rotating however, centrifugal force tends to throw these loops radially outwardly and inertia and air resistance tend to cause them to drag through the atmosphere. These first eight loops of strand therefore take the approximate shape indicated by the loops labeled "One," "Two" and "Three" in Fig. 2.

As the peg spinner rotates all of the loops now spread out between the pegs **55** do not react identically to the atmospheric resistance and inevitably, certain ones of the loops may entangle themselves with others of the loops. The formation of such an entanglement is generally illustrated in Fig. 2 where a loop indicated as "Loop Four" is about to become entangled with a loop indicated by the legend "Loop Five" and where, possibly as a reaction thereto "Loop Five" is about to become entangled with "Loop Three" at the place indicated by the arrow bearing the legend "Entanglement."

As the peg spinner which now carries one of the loops between each pair of adjacent pegs **55**, continues to rotate and the strand **20** continues to be linearly projected along its path of engagement with the pegs **55**, successive engagements between the pegs **55** and the strand **20** occur. Thus successive loops are laid over each of the pegs **55** and extend generally outwardly from between the pegs **55**. Depending upon the mathematical ratios between the factors mentioned above, a number of series of loops may be present at any given time on the pegs **55**.

Before proceeding further with the description of the forming of the loops or "doublings" of the strand **20** on the pegs **55**, it will be explained how the loops or "doublings" are removed from the peg spinner **50**. It is possible when operating according to the invention for an operator to reach into the area delineated by the pegs **55** in their rotation with, for example, a hook and to so position the end of the hook that it engages the loops of the strand which are inside of the pegs **55**. If this is done and if the operator then pulls the hook generally axially away from the peg spinner **50** the first loop of strand engaged by the hook will be drawn axially upwardly on its peg **55** and at the same time the doubled length thrown outwardly by centrifugal force will be shortened. As this grasped loop is pulled it is also being spun around by its engagement with the pegs **55** of the peg spinner and thus it passes through positions occupied by other loops of strand engaged with the pegs **55** and finally around to the position where the driving strand **20** is entering the field of the pegs **55**.

When one of the lengths of strand in the grasped loop engages the driving strand **20**, it functions like one of the pegs **55** and a bight is formed in the driving strand over the length of the looped strand. Because of the multiplicity of strand lengths between serially connected bights which engage the driving strand **20** in adition to the pegs **55**, the mass of strand within the zone of the peg spinner shortly becomes a heterogeneously intertangled series of interconnected bights with spaced portions of the driving strand being progressively delayed or interrupted so that the intermittent portions pass the delayed portions to progressively form new connected bights, loops and doublings.

Of course, it is virtually impossible for an operator to manually pull any portion of the strand and thus the successively entangled "doublings" of the strand away from the peg spinner at a constant speed to produce a uniform product. For this reason the gathering eye **65** is employed to insure that all portions of the strand are drawn away through a relatively centrally located point and also to provide a reference point from which the successively formed and withdrawn loops can be spread by the action of the peg spinner in order to insure their continued entanglement and engagement with successively formed loops of the driving strand **20**.

In order to carry away a uniform quantity of the material for each rotation of the peg spinner **50** and thus for each measured length of the driving, linearly fed strand **20**, the accumulated entangled roving or bundle of strands must be pulled at a constant rate. Conventional balling mechanism for pulling on the strand at a constant rate will be described in detail below but suffice it to say that such means are essential to the operation of the instant invention.

A strand or cord or a previously accumulated mass of strand in the form of the "roving" as shown in Fig. 3, is fed by hand downwardly through the gathering eye **65** with the peg spinner **50** stationary. This length of strand is led over to one of the pegs **55** and then circumferentially around the peg spinner **50**, being intertwined with three or four or more of the pegs **55** so that it has a firm binding on the peg spinner **50**.

When the driving strand **20** is again being produced or if it is still being produced and the peg spinner with the strand or cord length attached as described is again started, the action of the balling or winding device pulls this length of starting cord upwardly through the gathering eye **65**. Simultaneously therewith the rotation of the peg spinner **50** carries the length of strand circumferentially around and through the path of the driving strand **20**.

As the driving strand **20** is struck by the pegs **55** and by the starting cord it forms loops over each of these elements which become entangled with the starting cord. In Fig. 2 a loop designated by the reference character **73** is shown as having been formed over a loop **74** being pulled off the end of one of the pegs **55**. The entanglement of the loop **73** with the loop **74** may also include entanglement with a next previously formed loop **75** so that the loop **75** also is engaged through the loop **73** with the loop **74**.

In Figs. 2 and 13 there are shown five general layers of loops. Each successively placed layer of loops is drawn off the pegs **55** after the previously emplaced layer of loops but may become so entangled therewith as to be drawn off in part at least with or even before a previously laid layer of loops. Similarly, each layer of loops

drawn off the peg **55** will entangle itself with both previously and later laid layers of loops and with the driving strand **20** itself.

The location of the gathering eye **65** at a point near the center of rotation of the pegs **55** and with its entering face in the plane close to the plane of the ends of the pegs **55** insures that the loops of strand are first drawn inwardly in a substantially radial direction so that they repeatedly cross the path of lineal movement of the driving strand **20**. Because the driving strand **20** is following a substantially straight path and moving at a high rate of speed a portion of driving strand **20** will project through each and every successive opening between lengths of strand or pegs moving across its path. Therefore, a loop of driving strand will be formed over each length of strand whether of a previously formed or subsequently formed loop or over the pegs and the mass will shortly be comprised of many series of loops of strand of varying lengths. The maximum length of any loop of strand is, of course, determined by the circumferential distance between adjacent pegs **55** and the relationship between their speed of rotation and the linear feed of the driving strand **20**. The loops designated by the legends "One," "Two," "Three," "Four" and "Five" in Figs. 2 and 13 are in the lowermost layer, i. e., that layer nearest the disk **51** and are longest because those loops have not yet started to be pulled inwardly and upwardly to the gathering eye **65**.

It can be seen, particularly in Fig. 13, that each successive series of loops extends radially outwardly a lesser distance than subsequently laid layers of loops because they have been pulled inwardly toward the gathering eye **65** by their entanglement with previous loops. Centrifugal force however may finally throw the loops off the pegs **55** before they have been entirely withdrawn from between the pegs **55**. In this case the rotary force exerted by the peg spinner **50** through the pegs **55** no longer is effective upon these loops, for example, the loop **74** and it may open out further radially.

In Figs. 3, 3*a*, 2 and 13 the entangled roving-like bundle of strands is indicated by the legend "roving" and the reference character **76**. In general the roving **76** consists in a plurality of "doublings" of the strand **20**, each of the "doublings" consisting of one of the loops, for example, the loop labeled "Loop One" in Fig. 2, stretched out longitudinally and with its two lengths laid generally parallel to each other. Because of the progressive pulling of the loops off the pegs **55** and through the eye **65** the curved connections between the two lengths of the loops are staggered along the length of the roving **76**. In cross section, however, the roving **76** as shown in Fig. 3*a* is substantially identical in appearance with the cross section of a group of parallel strands of the same number. At any point along the roving **76** a continuous end **77** between lengths of a single "doubling" may exist in the body of the mass. Similarly, a single end **78** of one side of a loop or "doubling" or an entire loop **79** may extend outwardly from the general mass of strands forming the roving **76**.

It will be appreciated that Figs. 2, 3, 3*a* and 13 are only rough approximations of the particular configurations taken by the driving strand, the loops of strand during formation, between formation and entanglement, during entanglement and during withdrawal and of the roving itself; it being impossible to accurately observe these phenomena or to record them and, in fact, the precise configurations being random inasmuch as they depend upon random entanglements and engagements between the forming and collecting portions of the strand. It can be stated, however, that the configurations shown in the drawing are typical of those found by observation and that with the roving **76** being pulled through the gathering eye **65** at constant linear speed, such typical formations occur with sufficient constancy to provide for a uniform "roving" having a cross section consisting of a number of individual strands at any point equal to the ratio between the linear speeds of the driving strand **20** and the roving **76**. For example, if the driving strand **20** is fed at a speed of, say, 11,000 feet per minute and the roving wound at a lineal speed of 133 lineal feet per minute, there will be

$$\frac{11{,}000}{133}$$

or an average of, say, 80 to 82 strands at each point along the finished roving **76**.

It will be observed in Fig. 3 particularly that, as a result of the rotary motion of the peg spinner **50**, the "roving" **76** is twisted as the loops and "doublings" are combined and drawn off through the gathering eye **65**. The twist results from the fact that the finished "roving" **76** is held by the winding or pulling mechanism which feeds it from the guide eye **65** and all of the loops and "doublings" caught on the pegs **55** are revolved around the axis of the guide eye **65** by rotation of the peg spinner **50**.

The degree of twist imparted to the roving **76** is a result of the rotation of the peg spinner **50** in terms of the lineal movement of the finished "roving" **76**. Under the conditions mentioned just above where the driving strand **20** is fed at a speed of, say, 11,000 feet per minute and the roving wound at a lineal speed of 130 feet per minute, producing 80 nominal ends in the finished roving **76**, the peg spinner has been operated at speeds of approximately 385 R. P. M. to produce slightly less than three turns per foot of the "roving."

The twist imparted to the roving **76** probably is classifiable as a "false" twist because both the roving **76** and the driving strand **20** are held by their feeding mechanisms. However, because of the doubling up of the strand on the pegs **55** and the intermatting and entanglement of the loops of the strand as they pass through the guide eye **65**, the twist appears to be a "real" twist and the roving **76** has no tendency to unwind as tension is applied to the combined mass.

The roving **76** can be drafted longitudinally by intermittent tension but the loops and "doublings" cannot be completely untangled by merely pulling on the ends of a length of the roving. The loops and "doublings" of the strand are so completely entangled with each other and intermatted by the twisting that more than enough tensile strength is present to permit the roving to be handled by various means which exert force longitudinally on one end of a wound package.

Strand pulling and winding

The "roving" **76** may be packaged in any of a number of conventional manners, the only requirement being that the mechanism for packaging the roving **76** shall feed it at a constant lineal speed. In the drawings (Figs. 1, 7 and 8) this mechanism is generally indicated at **80** and as generally consisting of a driving roller **81** and a spool holding bracket **82**.

The mechanism **80** has a bench-like frame **83** on which is mounted a driving motor **84** linked by a belt **85** to a speed reducer mechanism **86** which in turn is connected through the medium of a V-belt **87** with a pulley **88** on the roller **81**. The roller **81** is rotatably mounted upon an axle **89** journalled in bearing blocks **90** and extending horizontally, generally perpendicular to the path of movement of the roving **76** from the gathering eye **65**. The roller **81** is cylindrical and has a friction surface, for example, the surface may be formed from a rubber blanket or similar material. Through the medium of the motor **84** and the speed reducer mechanism **86** the roller **81** is rotated to provide a peripheral surface speed equal to the desired linear speed of the roving **76**.

The framework **83** also mounts a traversing mechanism consisting of a guide eye **91** through which the roving

76 passes and which is mounted upon a generally vertically extending arm 92. The arm 92 is mounted by means of two sleeves 93 and 94 to slide back and forth on a pair of guide rods 95 which extend parallel to the axis of the roller 81. A cylindrical surface cam 96 is mounted by a shaft 97 journalled in a pair of bearing blocks 98 and extending parallel to the shaft of the driven roller 81. The cam 96 is rotated by a belt 99 engaged in a pulley 100 that is fixed on the shaft 89 and in a larger pulley 101 secured on the shaft 97. The cam 96 has an elliptical cam track 102 extending around its periphery. A roller 103 mounted on a pin 104 on the arm 92 is engaged in the track 102.

As the cam 96 rotates engagement of the roller 103 in the track 102 reciprocates the arm 92 on the guide rods 95 and the guide eye 91 carries the roving 76 back and forth across the surface of the roller 81.

The bracket 82 consists in a pair of arms 105 which are rockingly mounted by a shaft 106 that is carried by a pair of ears 107 on the upper surface of the framework 83 and which extends across the framework 83 parallel to the shafts 89 and 97. The arms 105 mount a rotary spool 108 on which the roving 76 is wound by peripheral engagement between the spool 108 and the built up layers of roving 76 as they accumulate thereon.

It will be observed particularly in Fig. 7 that the roving 76 is led over the surface of the roller 81 by the guide eye 91 and underneath the spool 108. The arms 105 being pivoted are swung forwardly to engage either the periphery of the spool 108 or the surface of the accumulating mass of roving 76 frictionally with the surface 81. Therefore the roving 76 is wound on the spool 108 at a constant lineal speed.

The arms 105 can be swung backwardly to the position shown in broken lines in Fig. 7 where they engage a pair of support pads 109 so that the spool 108 can be removed when a sufficient quantity of roving 76 has been accumulated thereon.

Modifications

Fig. 14 illustrates a method and apparatus for removing the entangled "doublings" of a driving strand 110 from a peg spinner 111. In this modification of the invention the peg spinner is provided with a number of axially extending pegs 112 spaced around its periphery in a manner similar to that of the peg spinner 50 shown in the earlier drawings. In this case, however, instead of pulling the entangled mass of "doublings" upwardly and away from the face of the peg spinner 111, for example, through the guide eye 65 of the earlier modification, the entangled mass is pulled axially through a hollow axle 113 by which the peg spinner 111 is supported. The axle 113 may be mounted for rotation by bearings 114 and driven by a belt 115 engaged in a drive pulley 116.

In order to instigate the pulling off of the entangled "doublings" and loops of the strand 110 from the peg spinner 111, an operator reaches up through the hollow shaft 113 with a long hook or similar implement and catches the driving strand 110 pulling a length of it down through the hollow axle 113 to the winding or other pulling mechanism. As the strand 110 continues to move it strikes the pegs 112 and becomes entangled with that portion which is being pulled through the hollow shaft 113. Further rotation of the peg spinner and subsequent entanglings cause the "doublings" to flow inwardly and through the hollow shaft 113 in a manner substantially identical with that described above with respect to the removal of the entangling entanglements through the guide eye 65.

Figs. 15 and 16 illustrate a further modification of the invention in which a peg spinner fragmentary indicated at 117 is provided with a plurality of pegs 118 spaced around its periphery. In this modification of the invention the pegs 118 extend only generally axially and are bent inwardly so that their free ends are radially spaced from each other a distance less than the ends which are mounted in the peg spinner disk 119. The purpose and operation of this modification of the invention is best understood with respect to a pair of sets of loops indicated by the legends "First Loops" and "Second Loops" in Fig. 15. The first loop is shown in Fig. 15 by open lines and the second loop shown by a solid line.

As explained above, later accumulated loops caught by the pegs 118 of the peg spinner 117 frequently become entangled with previously caught loops. Such a severe entanglement is illustrated in Fig. 15 where it is indicated by the legend "entanglement." When such an entanglement occurs, centrifugal force having thrown the loops outwardly from the peg spinner 117, it is as if tight loops of strand were merely being carried on the pegs 118. These loops outside of the pegs 118 must be either broken or slid off the ends of the pegs 118 to allow the entangled mass of strand to be pulled radially inwardly off the peg spinner 117.

In Fig. 16 there is shown a gathering eye 120 through which the entangled mass is pulled to form a roving 121. It will be seen particularly in Fig. 16 that with bent pegs 118 it is easier for the entangled loops to slide off the ends of the pegs 118 than it would be if the pegs were straight and extended precisely parallel to the axis of the peg spinner 117. Of course, the pegs 118 may be bent inwardly either angularly or in curved form and achieve the same objective, i. e., the facilitation of the removal of the tangled loops of strand from radially outside the pegs 118.

Figs. 17 and 18 illustrate a modification of the process and apparatus embodying the invention which produces a bulkier and more loosely formed "roving" or bundle of multiple strands. In this modification of the invention a peg spinner 122 has a disk 123 mounted upon a rotary shaft 124 and provided with a plurality of pegs 125 around its periphery. As in the other modifications of the invention a guide eye 126 is mounted in position to receive the accumulated entangled mass of strands. In this case, however, a driving strand 127 is fed, not directly into the path of the pegs 125 but into oblique contact with a deflector plate 128.

Impact of the driving strand 127 on the deflector plate 128 opens up the strand 127 separating its individual filaments from each other and further disorienting their parallelism. With each section of the strand 127 thus opened, the loops formed by catching the strand over the pegs 125 are more fluffy and bulky than similar loops formed when the strand is directly engaged with the peg 125. Thus when the entanglements and loopings are pulled through the guide eye 126 to form a roving 129 the formed roving has a substantially greater bulk in its exterior physical dimensions than the similar rovings formed in the earlier modifications even though it may have exactly the same number of strands involved in its structure and even though the relative speeds of the several parts of the apparatus embodying the invention and used in carrying out the method of the invention are the same as those of the earlier modifications.

The linear speed of the driving strand 127 may bear a ratio of, say, 80 to 1 to the lineal speed of the winding of the roving 129. In such a case there will be approximately 80 adjacent opened strands at each point along the roving 129. The roving 129 will have several times the bulk of the roving produced in the earlier modifications of the invention.

Fig. 19 is a schematic illustration of apparatus and methods for treating the rovings formed according to the invention either during the formation of "doublings" and loopings or subsequent to such formation or at both times. In Fig. 19 there is illustrated a peg spinner 130 carrying a plurality of generally axially extending pegs 131 and mounted upon a hollow shaft 132. A driving strand 133 is projected into the path of the pegs 131 and

in accordance with the invention entangled thereon to form "doublings" and loops which are drawn off through a gathering eye **134**.

In this arrangement according to the invention a roving **135** pulled off the peg spinner **130** may be treated or incorporated with other materials continuously as it is formed. For example, a strand, web, cord, filament, or other continuous form **136** of a second material may be added to or incorporated with the roving **135**. This strand or cord **136** is fed upwardly through the hollow axle **132** and through the guide eye **134** where it becomes entangled with and is carried along by the "doublings," loops and snarls formed from the driving strand **133** and pulled away in the form of a roving **135**. The added material may be a strand, cord, thread or other form of a different fibrous material, for example, jute, hemp, cotton, linen, flax or other natural fibers might be added to the continuously pulled glass or other synthetic fibers projected into the peg spinner in the form of a strand **133**. In this manner, characteristics of both types of fibers may be present in the finished roving **135**. On the other hand, it may be desirable to incorporate a resinous material with the fibers entangled on the peg spinner **130** and the resinous material may be drawn in the form of a strand **136**, for example, as a ribbon of thermoplastic film.

In addition to the incorporation of an added material by means of feeding it in continuous form through the hollow axle **132**, it may be desirable to spray a liquid or a liquid carrier for another material onto the strand during its entanglement. This may be accomplished by locating a spray head **137** as indicated in Fig. 19 so that the material is sprayed into the area delineated by the pegs **131** during their rotation.

In some instances it may be desirable to coat the exterior of the entangled "roving" after the "doublings" and loops of strand have been gathered on the peg spinner **131**. This may be accomplished by leading the roving **135** over a coating roller **138** mounted to carry the material upwardly from a tank **139** or with similar conventional coating mechanism.

Depending upon the nature of the one or more materials added to the accumulating mass of strand, it may be desirable to lead the roving through heating or drying stations such as heat lamps **140** or through more than one of such stations.

The only requirement during any of these miscellaneous operations to which the roving may be exposed is that they be accomplished without interfering with the steady and uniform pulling of the entangled mass of "doublings" and loops which actually form the roving itself. As was earlier explained, in order to control the uniformity of the product and to maintain the average number of adjacent strands at any point along the product, it is necessary to maintain a constant ratio between the speed of projection of the driving strand and the linear movement of the roving itself.

Although the roving has been shown as being wound upon a conventional surface driving winder it will be appreciated that it can also be pulled by constant speed devices of other types well known in the art, for example, by a chopper which chops the roving and the strands therein into relatively uniform lengths for use in reinforcing resinous articles, in fabricating masses and mats of fibers, and for similar purposes.

We claim:

1. A method for forming a multiple strand mass from a single continuous strand that comprises feeding said continuous strand longitudinally along a controlled path and into a working zone, at least momentarily interrupting the movement of progressively spaced points along said strand as each of said points enters said working zone while continuing the feeding of said continuous strand into said zone thereby forming progressive, connected bights in said continuous strand, orienting said bights into general parallelism and longitudinally staggered relationship and simultaneously twisting and longitudinally feeding said oriented bights out of said working zone as an integral multiple strand mass.

2. A method for forming a multiple strand mass from a single continuous strand that comprises feeding said continuous strand longitudinally along a controlled path and into a working zone, momentarily interrupting the movement of progressively spaced points along said strand as each of said points enters said working zone while continuing the feeding of said continuous strand into said zone past said interrupted points thereby forming progressive, connected bights in said continuous strand, releasing said bights in staggered order, orienting said bights into general parallelism and longitudinally staggered relationship and simultaneously twisting and longitudinally feeding said oriented bights out of said working zone along a path generally normal to the path of said strand at a constant speed as an integral multiple strand mass.

3. A method for forming a multiple strand mass from a single continuous strand that comprises feeding said continuous strand at a constant speed longitudinally along a controlled path and into a working zone, at least momentarily interrupting the movement of progressively spaced points along said strand as each of said points enters said working zone while continuing the feeding of said continuous strand into said zone thereby forming progressive, connected bights in said continuous strand, orienting said bights into general parallelism and longitudinally staggered relationship and simultaneously twisting and longitudinally feeding said oriented bights out of said working zone as an integral multiple strand mass at a constant speed related to the speed of said continuous strand in a ratio equal to the average number of strands in any cross section of said mass.

4. A method for forming a multiple strand mass from a single continuous strand that comprises feeding said continuous strand longitudinally along a controlled path and into a working zone, at least momentarily interrupting the movement of progressively spaced points along said strand as each of said points enters said working zone while continuing the feeding of said continuous strand into said zone past said interrupted points thereby forming progressive, connected bights in said continuous strand, spinning said bights in said working zone and across the path of said continuous strand for forming additional bights thereover, orienting all of said bights into general parallelism and longitudinally staggered relationship and simultaneously twisting and longitudinally feeding said oriented bights out of said production zone at a constant speed as an integral multiple strand mass.

5. A method for forming a multiple strand mass from a single continuous strand that comprises feeding said continuous strand at a constant speed longitudinally along a controlled path and into a working zone, catching progressively spaced points along said strand as each of said points enters said working zone while continuing the feeding of said continuous strand into said zone between said caught points thereby forming progressive, connected bights in said continuous strand, spinning said bights in said working zone and across the path of said continuous strand for forming additional bights thereover, orienting all of said bights into general parallelism and longitudinally staggered relationship by progressively releasing said bights from their caught positions and simultaneously twisting and longitudinally feeding said oriented bights out of said working zone as an integral multiple strand mass at a constant speed related to the speed of said continuous strand in a ratio equal to the average number of strands in any cross section of said mass.

6. A method for forming a multiple strand mass from a single continuous strand that comprises feeding said continuous strand at a constant speed longitudinally along a controlled path and into a working zone, intermittently

engaging said strand with spaced projections at progressively spaced points along said strand as each of said points enters said working zone while continuing the feeding of said continuous strand into said zone between said projections thereby forming progressive, connected bights in said continuous strand, rotating said projections and the bights caught thereon across the path of said continuous strand, orienting all of said bights into general parallelism and longitudinally staggered relationship by progressively releasing said bights from said projections and simultaneously twisting and longitudinally feeding said oriented bights out of said working zone as an integral multiple strand mass at a constant speed related to the speed of said continuous strand in a ratio equal to the average number of strands in any cross section of said mass.

7. A method for forming a multiple strand mass from a single continuous strand that comprises feeding said continuous strand at a constant speed longitudinally along a controlled path and into a working zone, intermittently engaging said strand with spaced projections at progressively spaced points along said strand as each of said points enters said working zone while continuing the feeding of said continuous strand into said zone between said projections thereby forming progressive, connected bights in said continuous strand, rotating said projections and the bights caught thereon across the path of said continuous strand, orienting all of said bights into general parallelism and longitudinally staggered relationship and simultaneously twisting and longitudinally feeding said oriented bights out of said working zone as an integral multiple strand mass at a constant speed and along a path generally normal to the path of said continuous strand.

8. A method for forming a multiple strand mass from a single continuous strand that comprises feeding said continuous strand at a constant speed longitudinally along a controlled path, rotating a spinner having a plurality of generally axially extending, peripherally spaced projections so that the projections are moved laterally across the path of said strand with said projections generally normal to said path thereby engaging progressively spaced points along said strand and moving such points laterally while continuing the feeding of said continuous strand between engagements with said projections thereby forming bights between said projections, continuing the rotation of said spinner for rotating such bights into repeated engagement with said continuous strand, pulling such bights off said projections progressively and laterally compacting said bights by longitudinally pulling such bights in a direction generally parallel to the axis of said spinner at a constant speed related to the speed of said continuous strand in a ratio equal to the average number of strands in any cross section of said mass.

9. Apparatus for producing a continuous roving having a multiple strand cross section from a single continuous strand that comprises, in combination, strand feeding means for projecting a continuous, flexible strand linearly at a constant speed along a controlled path leading to a working zone, a strand catcher movable laterally relative to said path and having spaced means for engaging and interrupting the movement of progressively spaced portions of said continuous strand without interfering with the movement of intermediate portions of said strand, whereby said strand is caught on said projections in a series of connected bights, and means for progressively entangling and removing said bights from said projections continuously at a constant speed.

10. Apparatus for producing a continuous roving having a multiple strand cross section from a single continuous strand that comprises, in combination, strand feeding means for projecting a continuous flexible strand linearly at a constant speed along a controlled path leading to a working zone, a strand catcher rotatable on an axis inclined to said path and having peripherally spaced generally axially extending pins, said strand catcher being spaced adjacent said path so that said pins cross said path and engage and interrupt the movement of progressively spaced portions of said continuous strand without interfering with the movement of intermediate portions of said strand, whereby said strand is caught on said pins in a series of connected bights, and rotated therewith, guide means extending axially away from said catcher and adapted for laterally compacting said bights as they are drawn axially off said pins and mechanism for pulling said bights through said guide means at a constant speed.

11. Apparatus for producing a continuous roving having a multiple strand cross section from a single continuous strand that comprises, in combination, strand feeding means for projecting a continuous flexible strand linearly at a constant speed along a controlled path leading to a working zone, a peg spinner rotatably mounted on an axis inclined to said path, said peg spinner having a plurality of generally axially extending pins near its periphery, the axis of said spinner being so located that said pins at one side extend across and are moved laterally of the path of said continuous strand for engaging progressively spaced points on said continuous strand without interfering with the movement of intermediate portions of said strand, and catching said continuous strand in a series of connected bights on said pins, a generally axially extending guideway spaced inwardly from said pins, and separate mechanism for exerting constant tractive force on a strand mass pulled through said guideway by entangling some of said bights and pulling the same generally axially and radially off said pins.

12. Apparatus according to claim 11 in which the guideway is an eye having an axially extending opening spaced laterally of the axis of the spinner and beyond the plane of the ends of the pins.

13. Apparatus according to claim 11 in which the peg spinner is mounted on a hollow shaft and the hollow shaft serves as the guide means for compacting the bights.

14. Apparatus according to claim 11 in which the pins extend generally axially and are bent inwardly at their free ends.

15. Apparatus according to claim 11 in which the mechanism for exerting tractive force on the entangled mass operates to pull the mass away at a constant speed related to the speed of the continuous strand in a ratio equal to the average number of strands in any cross section of the withdrawn mass.

16. A spun roving or the like consisting in an entangled mass of serially connected, staggered and overlapped bights of a single continuous strand with the inter-bight portions of said strand laterally compacted into generally longitudinal and parallel orientation.

17. A roving according to claim 16 in which the individual inter-bight strand lengths are twisted with each other in the roving mass.

18. A method for forming a continuous, roving-like, multiple strand, glass fiber mass that comprises, attenuating a single continuous multifilament glass fiber strand from a supply of molten glass, feeding said strand longitudinally along a controlled path and into a working zone, at least momentarily interrupting the movement of progressively spaced points along said strand as each of said points enters said working zone while continuing the feeding of said continuous strand into said zone thereby forming progressive, connected bights in said continuous strand, orienting said bights into general parallelism and longitudinally staggered relationship and simultaneously twisting and longitudinally feeding said oriented bights out of said working zone as an integral multiple strand mass.

19. A method for forming a continuous, roving-like, multiple strand, glass fiber mass that comprises, attenuating a single continuous multifilament glass fiber strand from a supply of molten glass, feeding said strand longitudinally along a controlled path, deflecting said strand angularly from the first mentioned path and into a sec-

ond controlled path while concomitantly at least partially separating said fibers from each other while maintaining strand unity, such second path leading into a working zone, at least momentarily interrupting the movement of progressively spaced points along said strand as each of said points enters said working zone while continuing the feeding of said continuous strand into said zone thereby forming progressive, connected bights in said continuous strand, orienting said bights into general parallelism and longitudinally staggered relationship and simultaneously twisting and longitudinally feeding said oriented bights out of said working zone as an integral multiple strand mass.

References Cited in the file of this patent

UNITED STATES PATENTS

796,740	Linkmeyer	Aug. 8, 1905
2,167,546	Evans	July 25, 1939
2,249,711	Knebusch	July 15, 1941
2,331,004	Standish	Oct. 5, 1943
2,399,260	Taylor	Apr. 30, 1946
2,436,336	Stuart	Apr. 11, 1944
2,584,913	Parish	Feb. 5, 1952

FOREIGN PATENTS

420,085	France	Nov. 14, 1910