July 21, 1959 W. F. NOLDEN ET AL 2,896,034

MOUNTING AND OPERATING MEANS FOR ELECTRIC SWITCH MECHANISMS

Filed Aug. 17, 1956

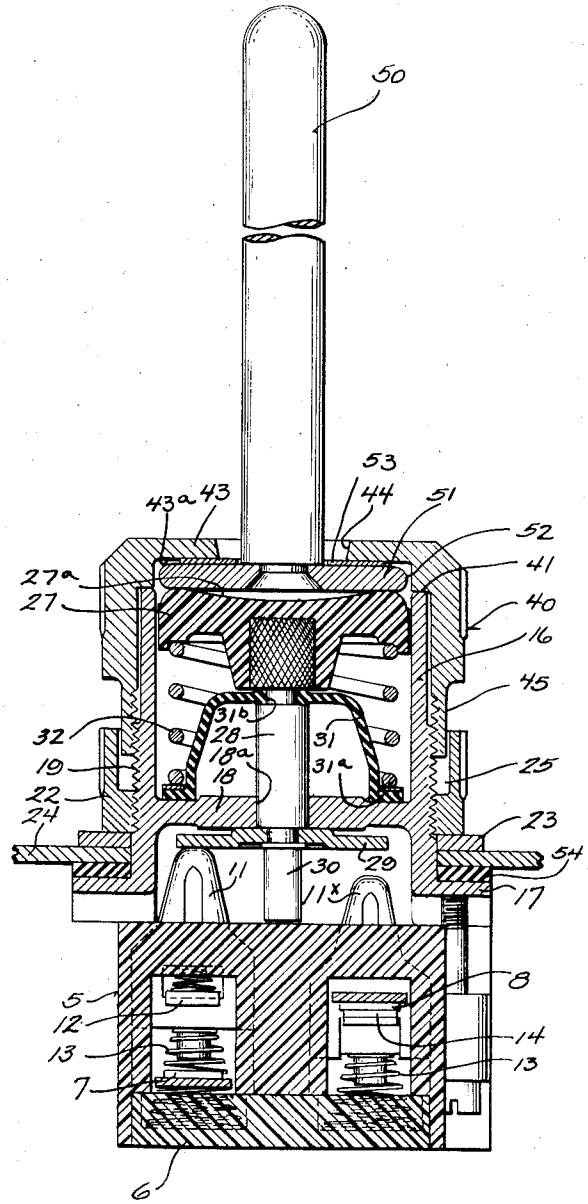

Fig. 1

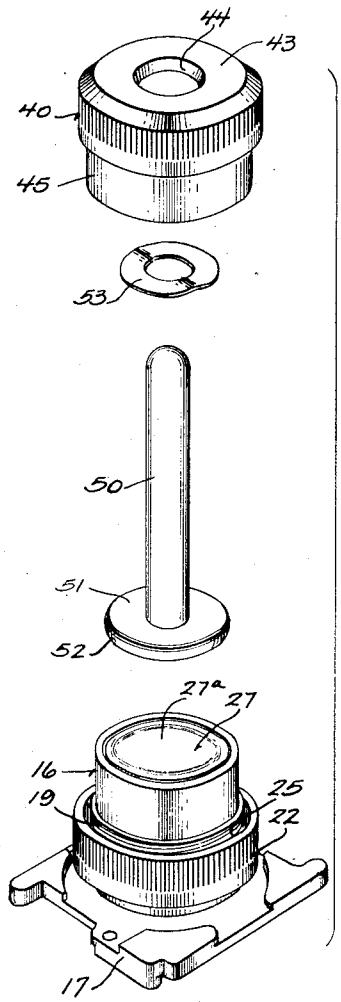

Fig. 2

INVENTORS
WILLIAM F. NOLDEN
CLYDE F. ROBBINS
BY W. F. Nolden
ATTORNEY

United States Patent Office 2,896,034 Patented July 21, 1959

2,896,034

MOUNTING AND OPERATING MEANS FOR ELECTRIC SWITCH MECHANISMS

William F. Nolden and Clyde F. Robbins, Milwaukee, Wis., assignors to Cutler-Hammer, Inc., Milwaukee, Wis., a corporation of Delaware

Application August 17, 1956, Serial No. 604,712

1 Claim. (Cl. 200—16)

This invention relates to improvements in mounting and operating means for electric switch mechanism; and the invention relates more particularly to use of a heavy duty switch mechanism having a substantially universally movable actuator of the so-called "wobble stick" type.

An object of the invention is to provide novel means enabling use of a heavy duty switch of small size for mounting on a panel or the like, or within an enclosure, with multiple contactor circuit-making and breaking portions of the switch mounted behind the panel, and with a rigid actuator of the wobble stick type extending from the other side of the panel.

Another object of the invention is to adapt a switch mechanism of a known pushbutton type construction for operation of the switch mechanism by a rigid wobble stick handle movable into any position around a full circle centered on the axis of the handle and by a force acting on the handle in any direction at an angle to the center line of the handle.

Another object of the invention is to adapt a known form of pushbutton actuated switch mechanism for actuation by a rigid wobble stick type handle with a minimum change in the known form of mounting means for the switch structure and with relatively easy tilting movement of said handle in any radial direction throughout a relatively wide range with respect to the outer surface of the adapter.

Advantages and objects other than those above set forth will be apparent from the following description when read in connection with the accompanying drawings in which:

Figure 1 is a cross-sectional view of a structure embodying the present invention, the cross-section being taken substantially along the longitudinal axis of the device and showing, by way of example, the parts in the normal positions thereof, in which the movable contacts on the left-hand side of the switch have been disengaged from their associated stationary contacts and the movable contacts on the right-hand side have engaged their associated stationary contacts; and

Fig. 2 is a perspective view of a wobble stick type subassembly and the pushbutton subassembly of the switch; with the parts of the wobble stick subassembly separated for purposes of illustration.

The two switches and their pushbutton actuator may be, or preferably are, of the construction disclosed and claimed in our copending application, Serial No. 574,828, filed March 29, 1956. Generally, the switch structure comprises a two-part molded insulating housing, which parts jointly provide two separate cavities, each of which has a pair of fixed contacts extending thereinto; and each of which contains a bridging contactor which is movable into and out of engagement with its associated pair of fixed contactors. The movable bridging contacts are respectively urged toward given positions thereof by coiled compression springs respectively acting upon plungers of molded insulating material carrying the respective bridging contacts. Each plunger is guided by surfaces cooperatively shaped with respect to surfaces formed in

the switch cavities to provide for reciprocating movement only of each plunger, and the movable bridging contactor carried thereby, in substantially a straight line as the normally projecting end of each plunger moves into and out of its associated recess in the switch housing.

The pushbutton actuator construction includes a metallic casing of generally cylindrical form but having a substantially rectangular flange extending outwardly from the lower end thereof, as shown. Said metallic casing has a partition on which is seated a dome-shaped flexible sealing member attached to a rod connected with a pushbutton movable in the casing and a coiled compression spring acts between a flange on the sealing member and the inner surface of the pushbutton. The pushbutton rod has a plate attached thereto for acting on the plungers, said plate being guided in its reciprocating movement by guide ribs formed on the casing. The casing has a relatively long screw-thread fromed on the external surface thereof and a knurled metal ring engages the casing thread for mounting the entire structure in an aperture in a panel or the like, by drawing the flange of the casing against one side of the panel when the ring nut is drawn against the other side of the panel. It will be noted that the ring nut has a peripheral portion spaced laterally from the casing cylinder for a purpose to be described.

A member of inverted cup-like shape seats against the end of the pushbutton casing and has an internal thread engageable with the upper portion of the thread on the pushbutton casing. Said member retains a wobble stick comprising a handle for extension through a circular opening in the outer end of said member; with a metal disk fastened to the inner end of the handle for tilting in a cavity defined by the inner surface of said member and the outer end surface of the pushbutton. The hole in said member is of outwardly enlarged frusto-conical form and substantially larger than the diameter of the handle extending therethrough to provide clearance for the handle in the various positions into which said handle may be moved. A specially formed, annular, resilient metal washer is interposed between the outer surface of the wobble stick disk and the inner surface of the end wall of said inverted cup-like member to facilitate tilting of the handle disk.

Referring to the drawings by reference numerals; like numerals designating like parts; 5 designates the body of a switch housing of insulating material and 6 designates a bottom closure plate for such housing. The housing is divided into two separated cavities each of which has a pair of fixed contacts extending thereinto, only one contact of each pair being shown in side elevation at 7 and 8. The wiring terminal members, not shown, are located exteriorly of said housing. Each cavity contains a movable contact subassembly for bridging its respectively cooperating pair of fixed contacts; which subassemblies respectively comprise an insulating plunger 11 at the left-hand side of Fig. 1, upon which is mounted a spring-biased movable bridging contactor 12, and a helically coiled compression spring 13 of frusto-conical form. As shown at the left-hand side of Fig. 1, one of the springs 13 normally urges the plunger 11^x and movable bridging contactor 12 away from the fixed contacts 7, while the other spring 13 is shown as urging the plunger 11 and bridging its movable contactor 14 to a position for effecting bridging of the pair of fixed contacts 8. The walls of the respective recesses in the housing 5 each have integral projections extending into grooves in the plungers to insure reciprocation of the plungers in substantially a straight line and the upper end of each of the respective plungers is made of decreasing cross-section to eliminate any possibility of binding engagement of the plungers with respect to the housing aperture.

A member 16, preferably of cast metal, of generally

cylindrical form, is provided with a laterally extending substantially rectangular flange 17 at the inner end thereof. Member 16 is formed with an integral partition 18 intermediate the ends thereof and the cylindrical portion thereof is provided with a relatively long external screw-thread 19 in the peripheral surface thereof. The thread 19 is adapted to receive a ring-like nut 22; the lower end of which is adapted to clamp against panel 24 a nameplate 23, bearing a suitable word or legend, to indicate the character of control afforded upon tilting movement of handle 50 from its normal position shown in Fig. 1. Also, as shown, a substantially annular gasket 54 is interposed between the flange 17 and the inner surface of panel 24 to additionally insure oil-tightness of the complete assembly. The nut 22 has a counterbored annular cavity or recess 25 to accommodate the reduced outer diameter of the lower end portion 45 of the inverted cup-shaped member 40 in its fully assembled relationship to member 16.

An insulating pushbutton 27 is mounted in the casing 16 for reciprocation and has a metal rod 28 attached thereto for free sliding movement through an aperture 18^a in the casing partition 18. A plate 29, preferably of punched and stamped sheet metal, is attached to the end of the rod 28 for engagement with the plungers 11, 11^x of the switch parts, and is restrained against relative rotation by the pair of oppositely arranged line guide portions (one of which is shown at 30 in Fig. 1), which guide portions are formed integrally with said member 16.

A dome-shaped seal 31, formed of a suitable resilient, flexible, and water-proof and oil-proof rubber, or rubber-like material, such as "neoprene," has a peripherally outwardly flanged end portion 31^a seating on the partition 18 and has an aperture 31^b at the other end through which the pushbutton rod 28 extends. The rim surrounding the seal aperture 31^b is thickened to engage in a peripheral groove in the rod 28, while providing for attachment of the seal to said rod. A helical compression spring 32 acts between the flange 31^a of the seal and the underside of the pushbutton 27 to urge the pushbutton and plate 29 attached thereto toward one end of the casing 16 away from the ends of the switch plungers. As the casing member 16 is cylindrical to receive the cylindrical pushbutton 27, and the pushbutton rod 28 is also cylindrical and moves in a cylindrical aperture 18^a, the pair of guides 30 below the partition 18 engage with the notches, not shown, in opposite side edges of plate 29, so that movement of the pushbutton and said plate 29 is restricted to reciprocation in substantially a straight line. It will be noted that one end surface 27^a of the pushbutton 27 is slightly concave, for a purpose which will appear hereinafter.

A cup-shaped nut or assembling member 40 is formed internally on several different diameters to provide a shoulder 41 for seating on the outer end of the metal member 16 in such manner as to provide a suitable space between the outer end of the pushbutton 27 and the perforated outer end wall 43 of member 40; the space being of predetermined dimensions when the member 40 is in completely assembled relationship to the other parts. The end 43 of member 40 has an opening 44 therethrough with an outwardly flared peripheral wall. The lower end portion of member 40 is of reduced diameter, as indicated at 45, to provide for telescoping thereof between the ring nut 22 and the casing member 16; and the member 40 is internally threaded, as shown, for engagement with the upper end portion of the thread 19 on the pushbutton casing member 16. The side wall of the space defined by the outer end wall 43 of member 40 and the outer end surface of the pushbutton 27 may be rounded if desired but such rounding is not essential; provided that the diameter of the space is approximately equal to the diameter of the pushbutton.

A "wobble stick" type actuator comprises a handle portion 50 with a plane surfaced disk 51 attached to the inner end thereof. The disk is of a thickness to seat on the pushbutton with only a small clearance from the inner surface of the end wall 43 of the member 40; and said disk is of a diameter to afford substantial clearance between the peripheral outer edge 52 of the disk and the circular side wall of the space in which the disk is retained. The edge 52 of the disk is preferably rounded, as shown, to facilitate movement thereof on the inner surface of the end wall 43 of member 40 and on the concave end 27^a of the pushbutton 27; and such movement is facilitated by providing a punched and stamped resilient sheet metal washer 53, of the form best illustrated in Fig. 2, between the "wobble stick" disk 51 and the inner surface 43^a of the end wall 43 of member 40; the washer 53 being formed in shallow V-shape and preferably placed to have the edge of the V provide a liner bearing against the the inner face 43^a of the end wall 43 of member 40. The handle 50 is considerably smaller in diameter than the aforementioned opening 44, and the handle 50 accordingly can assume any one of a large number of radially different positions in the opening 44 when the "wobble stick" is operated to actuate the switch mechanism.

The normal positions of the respective parts is shown in Fig. 1 in which the pushbutton spring 32 urges the pushbutton 27 and the "wobble stick" washer 51 flatwise toward the inner surface 43^a of the end wall 43 of the member 40. The left-hand switch spring 13 normally urges the movable bridging contacts 12 and the left-hand plunger 11 to the position for disengaging the pair of fixed contacts, one of which is shown at 7. Conversely, the right-hand spring 13, in Fig. 1, normally urges the movable contacts (or bridging contactor) 14 into engagement with their associated pair of stationary contacts, one of which is shown at 8.

The "wobble stick" disk 51 is shown in Fig. 1 as pressed between the end of the pushbutton 27 and the adapter end wall 43, so that the "wobble stick" handle 50 extends outwardly perpendicularly to said end wall 43 and substantially on the center line thereof and in axial alinement with the parts already described.

With a switch such as shown in Fig. 1, whenever some condition requires interruption of the normally closed circuit, and/or closing of the normally open circuit controlled by the switch, it is necessary only to strike or otherwise move the "wobble stick" handle 50 in any radial direction to cause movement of the pushbutton and its plate whereby the movable bridging contactors 12 and 8 are respectively pressed toward and away from the pairs of fixed contacts associated therewith to close and/or open the respective circuits.

In the above movement, the disk 51 tilts to cause a portion of its peripheral edge 52 to bear upon the inner surface 43^a of the end wall 43 of member 40 while an opposite portion of such edge 52 bears upon the concave end surface 27^a of pushbutton 27. The "wobble stick" disk 51 therefore presses against the pushbutton 27 to compress its spring 32 and to move its associated plate 29 into driving engagement with the switch plunger 11 for compressing the switch spring 13.

It will be understood that both switches may be made identical with either of the forms shown and that both circuits will then be open, or both circuits will be closed, when the operating handle 50 is in the normal position thereof illustrated in Fig. 1.

Also it is to be understood that said resilient metal washer 53 additionally functions to assist in preventing unintentional movement of the handle 50, to prevent vibration thereof; and thus likewise any noise incident due to vibration.

We claim:

In an electric switch actuating mechanism, in combination, a two-part molded insulating housing providing a

recess, a pair of combined stationary contact and terminal members, the stationary portions of said members being positioned within said recess and the terminal portions of said members being located exteriorly of said recess, an insulating actuating member slidably mounted within said recess and having a reduced portion at one end thereof, a coiled compression spring interposed between the other end of said recess and said actuating member to normally bias the latter toward a given outer extreme position, a bridging contactor associated with and movable by said actuating member, means including a second coiled compression spring interposed between a part of said actuating member and said contactor to normally bias the latter toward a given extreme position with respect thereto, a die-cast metal casing to which said housing is attached for support of the latter, a pushbutton slidably mounted within said casing, said pushbutton when depressed effecting movement of said bridging contactor out of engagement with said stationary contacts, a die-cast, inverted cup-shaped metal member attached to said die-cast metal casing and having a centrally located outwardly flared opening formed therein, a "wobble-stick" type of switch actuator movably retained by said cup-shaped member for extension of the former in substantially axial alinement with the pushbutton, means whereby a predetermined degree of movement of said actuator out of such axial alinement causes movement of the pushbutton, the insulating actuating member and the bridging contactor associated with the latter for control of an electric circuit, means affording one hole mounting of said die-cast metal casing to a perforated panel, said last mentioned means comprising a relatively long peripheral screw-thread formed on a portion of said casing intermediate the ends thereof, an internally screw-threaded nut cooperatively engaging said screw-thread at the outer face of said panel for clamping engagement with the latter, the outer end portion of said nut being formed to provide therein an internal annular recess, said inverted, cup-shaped metal member having a lower end portion of reduced external diameter to telescope into said annular recess in said nut, thus avoiding exposure of said peripheral screw-thread when said parts are in assembled relationship to each other, a sealing gasket interposed between the lower surface of said panel and the upper surface of a peripheral flange formed integrally with said die-cast metal member, a dome-shaped elastic sealing gasket, the reduced outer end portion of which is adapted to seat against the inner end of said pushbutton and the larger end portion of which is adapted to seat against the inner wall of an outwardly opening recess in said cast metal member, and a relatively large coiled compression spring interposed between the inner surface of said pushbutton and a peripheral flange formed integrally with the inner end portion of said dome-shaped elastic sealing member.

References Cited in the file of this patent

UNITED STATES PATENTS

2,090,178	Brickner	Aug. 17, 1937
2,357,973	Robbins	Sept. 12, 1944
2,562,420	Furnas	July 31, 1951
2,573,139	Hoffman	Oct. 30, 1951
2,748,210	Frank	May 29, 1956
2,800,806	Sangster	July 30, 1357

FOREIGN PATENTS

605,380	Great Britain	July 22, 1948
730,720	Great Britain	May 25, 1955