(19) Europäisches Patentamt
European Patent Office
Office européen des brevets

(11) **EP 1 959 214 B1**

(12) **EUROPEAN PATENT SPECIFICATION**

(45) Date of publication and mention of the grant of the patent:
25.01.2012 Bulletin 2012/04

(51) Int Cl.:
F25B 41/06 *(2006.01)* *F25B 13/00* *(2006.01)*

(21) Application number: **08002486.2**

(22) Date of filing: **11.02.2008**

(54) **Expansion valve mechanism**

Expansionsventilmechanismus

Mécanisme de soupape d'expansion

(84) Designated Contracting States:
ES IT

(30) Priority: **15.02.2007 JP 2007035325**

(43) Date of publication of application:
20.08.2008 Bulletin 2008/34

(73) Proprietor: **MITSUBISHI ELECTRIC CORPORATION**
Chiyoda-ku
Tokyo 100-8310 (JP)

(72) Inventor: **Mukouyama, Takuya**
Tokyo 100-8310 (JP)

(74) Representative: **Pfenning, Meinig & Partner GbR**
Patent- und Rechtsanwälte
Theresienhöhe 13
80339 München (DE)

(56) References cited:
JP-A- 2001 311 571
JP-A- 2003 083 641
JP-A- 2005 083 690

Note: Within nine months of the publication of the mention of the grant of the European patent in the European Patent Bulletin, any person may give notice to the European Patent Office of opposition to that patent, in accordance with the Implementing Regulations. Notice of opposition shall not be deemed to have been filed until the opposition fee has been paid. (Art. 99(1) European Patent Convention).

EP 1 959 214 B1

Printed by Jouve, 75001 PARIS (FR)

Description

BACKGROUND OF THE INVENTION

1. Field of the Invention

[0001] The present invention relates to expansion valve mechanisms and more particularly to expansion valve mechanisms suitable for vapor-compression heat-pump air conditioners.

2. Description-of the Related Art

[0002] Known expansion valve mechanisms to be installed in refrigeration cycle apparatuses include fixed restrictors consisting of orifices and capillary tubes, and variable restrictors consisting of electronically controlled expansion valves.

[0003] Japanese Unexamined Patent Application Publication No. 2002-106994 (pp. 4-5 and Fig. 1) discloses an apparatus having a heating function using a refrigeration cycle, which is called heat-pump operation.

[0004] The apparatus disclosed in Japanese Unexamined Patent Application Publication No. 2002-106994 includes a four-way valve at the downstream side of a compressor. In cooling operation, a high-pressure, high-temperature refrigerant supplied to an external heat exchanger flows through a constant differential pressure valve and an orifice that open at a low pressure into an internal heat exchanger. In this case, when the pressure is high, the refrigerant flows through the constant differential pressure valve and the orifice that open at a low pressure and a constant differential pressure valve and an orifice that open at a high pressure, but bypasses the internal heat exchanger. In heating operation, the high-pressure, high-temperature refrigerant supplied to the internal heat exchanger flows through the constant differential pressure valve and the orifice that open at a high pressure. Thus, a heating function is provided.

[0005] However, this apparatus has the following problems:

[0006] (a) In the heating process, the high-pressure, high-temperature refrigerant only flows into one of the orifices, whereby the flow rate of the refrigerant cannot be controlled.

[0007] (b) Although provision of electronically controlled expansion valves in place of the orifices contributes to improved energy saving characteristics owing to accurate control of flow rate, the number of components increases thereby raising the manufacturing cost.

[0008] JP 2005 083 690 A discloses an expansion valve mechanism, according to the preamble of claim 1, wherein a dehumidifying orifice device (expansion valve) is composed of a cylindrical pipe and two valve seats serially arranged in said cylindrical pipe. A common valve element is movably arranged between the two valve seats to constitute a first check valve and a second check valve arranged in two lines for high-temperature refrigerant flow.

SUMMARY OF THE INVENTION

[0009] Accordingly, it is an object of the present invention to provide an expansion valve mechanism that is to be installed in a refrigeration cycle apparatus capable of heating operation (heat-pump operation), has a simple configuration and thus has a reduced manufacturing cost, and is capable of flow-rate adjustment.

[0010] According to an aspect of the present invention, an expansion valve mechanism that decompresses a high-temperature refrigerant includes a first line having a first check valve that permits the high-temperature refrigerant to flow only in one direction, and a second line having a second check valve that permits the high-temperature refrigerant to flow in a direction opposite the one direction. The first line includes first low-load decompression means, first high-load decompression means that is disposed in parallel with the first low-load decompression means, and a first pressure-responsive valve that releases the high-temperature refrigerant to the first high-load decompression means only when the high-temperature refrigerant has a pressure higher than a predetermined pressure. The second line includes second low-load decompression means, second high-load decompression means that is disposed in parallel with the second low-load decompression means, and a second pressure-responsive valve that releases the high-temperature refrigerant to the second high-load decompression means only when the high-temperature refrigerant has a pressure higher than a predetermined pressure.

[0011] In the expansion valve mechanism according to the invention, the first and second check valves work such that the refrigerant only flows into the first line during cooling operation and only flows into the second line during heating operation. This simple configuration suppresses the manufacturing cost to a low level and permits appropriate switching between cooling-operation and heating operation.

[0012] Further, when the pressure of the refrigerant flowing into the first or second line is high, the refrigerant flows into both the first low-load decompression means and the first high-load decompression means or both the second low-load decompression means and the second high-load decompression means. This permits adjustment of the flow rate.

BRIEF DESCRIPTION OF THE DRAWINGS

[0013] Fig. 1 shows the configuration of a refrigeration cycle apparatus including an expansion valve mechanism according to the present invention;

[0014] Fig. 2 schematically shows the expansion valve mechanism according to the present invention;

[0015] Figs. 3A and 3B are a front view and the like schematically showing a passage switching device not belonging to the present invention;

[0016] Figs. 4A and 4B are side elevational views schematically showing sections of the passage switching device shown in Figs. 3A and 3B;

[0017] Fig. 5 shows the configuration of a refrigeration cycle apparatus including an expansion valve mechanism;

[0018] Fig. 6 shows operation (low-load heating operation) of the expansion valve mechanism shown in Fig. 5;

[0019] Fig. 7 shows operation (high-load heating operation) of the expansion valve mechanism shown in Fig. 5;

[0020] Fig. 8 shows operation (low-load cooling operation) of the expansion valve mechanism shown in Fig. 5; and

[0021] Fig. 9 shows operation (high-load cooling operation) of the expansion valve mechanism shown in Fig. 5.

DESCRIPTION OF THE PREFERRED EMBODIMENTS

Refrigeration Cycle Apparatus

[0022] Fig. 1 schematically shows a refrigeration cycle apparatus including an expansion valve mechanism according to a first embodiment of the invention.

[0023] In Fig. 1, a refrigeration cycle apparatus 100 includes a compressor 1 that compresses a refrigerant, an outdoor heat exchanger 3 and an indoor heat exchanger 5 that exchange heat between the refrigerant supplied and the outside air, a four-way switching valve 2 that selectively directs the refrigerant compressed by the compressor 1 (hereinafter referred to as a "high-temperature refrigerant") to the outdoor heat exchanger 3 or the indoor heat exchanger 5, and an expansion valve mechanism 4 that decompresses the refrigerant supplied.

[0024] To warm the indoor space, the high-temperature refrigerant is supplied to the indoor heat exchanger 5, which is used as a condenser. To cool the indoor space, the high-temperature refrigerant is supplied through the outdoor heat exchanger 3 to the expansion valve mechanism 4. The refrigerant that has been obtained in the expansion valve mechanism 4 (hereinafter referred to as a "low-temperature refrigerant") is supplied to the indoor heat exchanger 5, which is used as an evaporator.

[0025] Accordingly, in Fig. 1, the refrigerant flows leftward or rightward at the expansion valve mechanism 4.

Expansion Valve Mechanism

[0026] Fig. 2 schematically shows the expansion valve mechanism 4 according to the first embodiment of the invention.

[0027] In Fig. 2, the expansion valve mechanism 4 includes a first line 4a having a check valve 6 and a second line 4b having a check valve 13, the first and second lines 4a and 4b being disposed in parallel with each other. For the convenience of description, the branch points between the first and second lines 4a and 4b are denoted as A and D, respectively. The branch point A communicates with the outdoor heat exchanger 3, and the branch point D communicates with the indoor heat exchanger 5.

[0028] The first line 4a includes a low-load capillary tube 7 and a high-load capillary tube 9 which branch from branch points B1 and C1 and are disposed in parallel with each other. A pressure-responsive valve 8 is disposed at an upstream point of the high-load capillary tube 9 (a point near the branch point B1, or on the side of the check valve 6).

[0029] The second line 4b includes a low-load capillary tube 12 and a high-load capillary tube 10 which branch from branch points B2 and C2 and are disposed in parallel with each other. A pressure-responsive valve 11 is disposed at an upstream point of the high-load capillary tube 10 (a point near the branch point C2, or on the side of the check valve 13).

Operation of Expansion Valve Mechanism

[0030] Next, cooling operation will be described.

[0031] In the expansion valve mechanism 4 configured as described above, cooling operation is performed such that the high-pressure refrigerant condensed by the outdoor heat exchanger 3 (the high-temperature refrigerant) flows through the check valve 6 into the first line 4a without flowing into the second line 4b, which is closed by the check valve 13.

[0032] The high-temperature refrigerant that has flowed into the first line 4a is decompressed (becomes the low-temperature refrigerant) in the low-load capillary tube 7, and flows out toward the indoor heat exchanger 5. In this state, the refrigeration cycle apparatus operates under a high load condition. As the pressure of the high-pressure side in the refrigeration cycle apparatus increases, the pressure difference between the upstream side and the downstream side of the low-load capillary tube 7 increases. When this pressure difference exceeds a threshold set for the pressure-responsive valve 8, the pressure-responsive valve 8 opens. That is, in cooling operation under a high load condition, the high-temperature refrigerant flows into both the low-load capillary tube 7 and the high-load capillary tube 9, whereby the flow rate of the refrigerant circulating in the refrigeration cycle apparatus 100 increases.

[0033] Next, heating operation will be described.

[0034] In the expansion valve mechanism 4 configured as described above, heating operation is performed such that the high-pressure refrigerant condensed by the indoor heat exchanger 5 (the high-temperature refrigerant) flows through the check valve 13 into the second line 4b without flowing into the first line 4a, which is closed by the check valve 6.

[0035] The high-temperature refrigerant that has flowed into the second line 4b is decompressed (becomes the low-temperature refrigerant) in the low-load

capillary tube 12, and flows out toward the outdoor heat exchanger 3. In this state, the refrigeration cycle apparatus operates under a high load condition. As the pressure of the high-pressure side in the refrigeration cycle apparatus increases, the pressure difference between the upstream side and the downstream side of the low-load capillary tube 12 increases. When this pressure difference exceeds a threshold set for the pressure-responsive valve 11, the pressure-responsive valve 11 opens. That is, in heating operation under a high load condition, the high-temperature refrigerant flows into both the low-load capillary tube 12 and the high-load capillary tube 10, whereby the flow rate of the refrigerant circulating in the refrigeration cycle apparatus 100 increases.

[0036] As described above, the refrigeration cycle apparatus 100 can be controlled such that the refrigerant circulation rate is suppressed to a low level during operation under a low load condition or is increased during operation under a high load condition. Therefore, prevention of degradation of heating/cooling performance due to an excessive increase in the pressure of the high-pressure side during high-load operation or due to a lower refrigerant circulation rate during high-load operation and prevention of degradation of energy saving characteristics due to liquid compression during low-load operation can be achieved simultaneously.

[0037] Further, since the expansion valve mechanism 4 only includes mechanical components but no electromagnetic mechanisms, the manufacturing cost can be suppressed to a low level.

[0038] Further, since the first and second lines 4a and 4b are disposed in parallel with each other with the same configuration so as to accommodate the refrigerant flowing in opposite directions, the expansion valve mechanism 4 is suitable for heat-pump air conditioners.

[0039] Component names given herein as the low-load capillary tubes 7 and 12 and the high-load capillary tubes 9 and 10 are used only for convenience. The amount of decompression, flow rate, and the like can be selected according to need for each of these components. In particular, the high-load capillary tubes 9 and 10 may also be normal pipes not having a decompression function. Expressions given herein as low-load operation and high-load operation are also used for convenience. For example, the pressure at which the pressure-responsive valves 8 and 11 open can be selected according to need independently for heating operation and cooling operation.

[0040] In the first embodiment, the capillary tubes are taken as exemplary decompression means. However, the invention is not necessarily limited thereto, but may include orifices instead. Alternately, capillary tubes or the like may be provided as auxiliary decompression means on at least one of the upstream side and the downstream side of the expansion valve mechanism 4.

Exemplary Embodiment of a Passage Switching Device not belonging to the invention

[0041] Figs. 3A to 4B schematically show a passage switching device. Fig. 3A is a front view, and Fig. 3B is a rear view. Figs. 4A and 4B are side elevational views of sections taken along planes A-A and B-B of Figs. 3A and 3B.

[0042] Referring to Figs. 3A to 4B, a passage switching device 200 includes a casing 70 having a cylindrical shape both ends of which are closed with plates. The casing 70 houses a first line 200a (disposed along plane A-A in Fig. 3A and 3B) and a second line 200b (disposed along plane B-B in Figs. 3A and 3B).

[0043] The first line 200a includes the following: a low-pressure fluid passage 40a constituted by a fluid inlet 41a that permits entry of fluid, and a low-pressure fluid outlet 42a and a communicating outlet 43a that freely release the fluid that has entered through the fluid inlet 41a; a high-pressure fluid passage 50a constituted by a high-pressure fluid inlet 51a that communicates with the communicating outlet 43a, and a high-pressure fluid outlet 52a that releases the fluid that has entered through the high-pressure fluid inlet 51a; a slider 44a that is disposed in the low-pressure fluid passage 40a and slides to open or close at least one of the low-pressure fluid outlet 42a and the communicating outlet 43a; and a spring (equivalent of urging means) 45a that is disposed in the low-pressure fluid passage 40a and urges the slider 44a toward the fluid inlet 41a.

[0044] The low-pressure fluid passage 40a also has a moving fluid inlet 46a that permits entry of the fluid for moving the slider 44a toward the fluid inlet 41a.

[0045] The second line 200b has the same configuration as the first line 200a. Therefore, components of the second line 200b are denoted by the same reference numerals as those for the first line 200a but with suffixes "b" in place of "a", whereby description thereof is omitted.

[0046] In short, the second line 200b includes: a low-pressure fluid passage 40b constituted by a fluid inlet 41b, a low-pressure fluid outlet 42b, a communicating outlet 43b, and a moving fluid inlet 46b; a high-pressure fluid passage 50b constituted by a high-pressure fluid inlet 51b and a high-pressure fluid outlet 52b; and a slider 44b and a spring 45b disposed in the-low-pressure fluid passage 40b.

[0047] The fluid inlet 41a of the first line 200a and the high-pressure fluid outlet 52b and the moving fluid inlet 46b of the second line 200b are provided in one end surface 71 of the casing 70. The high-pressure fluid outlet 52a and the moving fluid inlet 46a of the first line 200a and the fluid inlet 41b of the second line 200b are provided in the other end surface 72 of the casing 70. The low-pressure fluid outlet 42a of the first line 200a and the low-pressure fluid outlet 42b of the second line 200b are provided in a sidewall 73 of the casing 70.

Exemplary Embodiment of a Refrigeration Cycle Apparatus not belonging to the invention

[0048] Fig. 5 schematically shows a part of a refrigeration cycle apparatus including an expansion valve mechanism having the passage switching device. A refrigeration cycle apparatus 400 includes an expansion valve mechanism 300 having the passage switching device 200 in place of the expansion valve mechanism 4 according to the invention included in the refrigeration cycle apparatus 100. Therefore, the same components are denoted by the same reference numerals, and redundant description is omitted.

Expansion Valve Mechanism

[0049] In the passage switching device 200 of the expansion valve mechanism 300, the low-pressure fluid outlet 42a and the high-pressure fluid outlet 52a of the first line 200a respectively communicate with the low-load capillary tube 7 and the high-load capillary tube 9. Likewise, the low-pressure fluid outlet 42b and the high-pressure fluid outlet 52b of the second line 200b respectively communicate with the low-load capillary tube 12 and the high-load capillary tube 10.

[0050] A pipe 80 communicating with the outdoor heat exchanger 3 branches at a branch point A into outdoor pipes 81 to 84. A pipe 90 communicating with the indoor heat exchanger 5 branches at a branch point D into indoor pipes 91 to 94.

[0051] The outdoor pipe 81 is connected to the fluid inlet 41a of the first line 200a. The outdoor pipe 84 is connected through the low-load capillary tube 12 to the low-pressure fluid outlet 42b of the second line 200b. The outdoor pipe 83 is connected to the moving fluid inlet 46b of the second line 200b. The outdoor pipe 82 is connected through the high-load capillary tube 10 to the high-pressure fluid outlet 52b of the second line 200b.

[0052] Likewise, the indoor pipe 91 is connected to the fluid inlet 41b of the second line 200b. The indoor pipe 94 is connected through the low-load capillary tube 7 to the low-pressure fluid outlet 42a of the first line 200a. The indoor pipe 93 is connected to the moving fluid inlet 46a of the first line 200a. The indoor pipe 92 is connected through the high-load capillary tube 9 to the high-pressure fluid outlet 52a of the first line 200a.

Operation of Expansion Valve Mechanism

[0053] Figs. 6 to 9 schematically show operation of the expansion valve mechanism 300 in the respective cases where the refrigeration cycle apparatus 400 operates for heating under a low load condition, heating under a high load condition, cooling under a low load condition, and cooling under a high load condition. Each case will be described below.

Heating Operation under Low Load Condition

[0054] Referring to Fig. 6, when the refrigeration cycle apparatus 400 operates for heating under a low load condition, the flow of the refrigerant condensed by the indoor heat exchanger 5 (the high-temperature refrigerant) is split at the branch point D. Some of the split flow proceeds through the indoor pipe 93 and the moving fluid inlet 46a of the first line 200a into the low-pressure fluid passage 40a to move the slider 44a toward the fluid inlet 41a. This causes the slider 44a to close the low-pressure fluid outlet 42a and the communicating outlet 43a. Consequently, the high-temperature refrigerant flows into the second line 200b (or the indoor pipe 91) without flowing into the first line 200a (or the indoor pipes 92 and 94).

[0055] The high-temperature refrigerant that has flowed into the indoor pipe 91 flows through the fluid inlet 41b of the second line 200b into the low-pressure fluid passage 40b. In this case, since the high-temperature refrigerant does not have a pressure sufficient to push back the spring 45b, the communicating outlet 43b remains closed by the slider 44b. This causes the high-pressure refrigerant to flow out through the low-pressure fluid outlet 42b, pass through the low-load capillary tube 12 to be decompressed (or to become the low-temperature refrigerant), and flow through the outdoor pipe 84 into the outdoor heat exchanger 3.

[0056] Even if the low-temperature refrigerant flows through the outdoor pipe 83 into the moving fluid inlet 46b, the slider 44b does not move because of the pressure of the low-temperature refrigerant which is lower than that of the high-temperature refrigerant, whereby the low-pressure fluid outlet 42b remains open.

[0057] Further, even if the low-temperature refrigerant flows through the outdoor pipe 81 into the low-pressure fluid passage 40a of the first line 200a, the slider 44a, which is pressurized by the high-pressure fluid, does not move because of the pressure of the low-temperature refrigerant which is lower than that of the high-temperature refrigerant, whereby the low-pressure fluid outlet 42a remains closed.

Heating Operation under High Load Condition

[0058] Referring to Fig. 7, when the refrigeration cycle apparatus 400 operates for heating under a high load condition, the refrigerant condensed by the indoor heat exchanger 5 (the high-temperature refrigerant) flows into the second line 200b (or the indoor pipe 91) without flowing into the first line 200a (or the indoor pipes 92 and 94).

[0059] Since the high-temperature refrigerant that has flowed into the low-pressure fluid passage 40b of the second line 200b has a pressure sufficient to push back the spring 45b, the refrigerant pushes back the slider 44b to open the communicating outlet 43b. This causes the high-temperature refrigerant to flow out through both the low-pressure fluid outlet 42b and the communicating outlet 43b. Some of the refrigerant flows through the low-

load capillary tube 12 to be decompressed (or to become the low-temperature refrigerant). The rest of the refrigerant flows through the high-pressure fluid passage 50b and the high-load capillary tube 10 to be decompressed (or to become the low-temperature refrigerant). The flows of the refrigerant proceed through the outdoor pipes 84 and 82, respectively, to the outdoor heat exchanger 3.

Cooling Operation under Low Load Condition

[0060] Referring to Fig. 8, when the refrigeration cycle apparatus 400 operates for cooling under a low load condition, the refrigerant condensed by the outdoor heat exchanger 3 (the high-temperature refrigerant) flows into the first line 200a (or the outdoor pipe 81) without flowing into the second line 200b (or the outdoor pipes 82 and 84).

[0061] The high-temperature refrigerant that has flowed into the outdoor pipe 81 flows through the fluid inlet 41a of the first line 200a into the low-pressure fluid passage 40a. In this case, since the high-temperature refrigerant does not have a pressure sufficient to push back the spring 45a, the communicating outlet 43a remains closed by the slider 44a. This causes the high-pressure refrigerant to flow out through the low-pressure fluid outlet 42a, pass through the low-load capillary tube 7 to be decompressed (or to become the low-temperature refrigerant), and flow through the indoor pipe 94 into the indoor heat exchanger 5.

Cooling Operation under High Load Condition

[0062] Referring to Fig. 9, when the refrigeration cycle apparatus 400 operates for cooling under a high load condition, the refrigerant condensed by the outdoor heat exchanger 3 (the high-temperature refrigerant) flows into the first line 200a (or the outdoor pipe 81) without flowing into the second line 200b (or the outdoor pipes 82 and 84).

[0063] Since the high-temperature refrigerant that has flowed into the outdoor pipe 81 has a pressure sufficient to push back the spring 45a, the refrigerant pushes back the slider 44a to open the communicating outlet 43a. This causes the high-temperature refrigerant to flow out through both the low-pressure fluid outlet 42a and the communicating outlet 43a. Some of the refrigerant flows through the low-load capillary tube 7 to be decompressed (or to become the low-temperature refrigerant). The rest of the refrigerant flows through the high-pressure fluid passage 50a and the high-load capillary tube 9 to be decompressed (or to become the low-temperature refrigerant). The flows of the refrigerant proceed through the indoor pipes 94 and 92, respectively, to the indoor heat exchanger 5.

[0064] As described above, since the expansion valve mechanism 300 is configured to include a component functioning as a check valve and a component functioning as a pressure-responsive valve in one casing, the expansion valve mechanism 300 has a reduced manufacturing cost and excellent space-saving characteristics. Moreover, the flow rate of the refrigerant at parts serving as orifices can be adjusted in accordance with the operation state of the refrigeration cycle apparatus.

[0065] Further, since the pressure-responsive valve is constituted by a slider and a spring, a condition (trigger) for switching the passage, or a threshold of the differential pressure, can be determined on the basis of the spring constant of the spring and the stroke of the slider movement. This leads to a simple configuration and assured operational reliability.

[0066] Additionally, since the mechanism functioning as an orifice and the mechanism for switching the passage are provided separately from each other, the amount of refrigerant circulation can only be determined on the basis of specifications of the capillary tubes. Therefore, the expansion valve mechanism 300 can be designed easily.

[0067] While the above embodiments concern capillary tubes as decompression means, the invention is not necessarily limited thereto and may also include orifices instead.

[0068] Further, the first line 200a and the second line 200b constituting the passage switching device 200 may be provided in separate casings. Furthermore, the low-pressure fluid passage 40a and the high-pressure fluid passage 50a may be arranged separately from each other while the communicating outlet 43a of the low-pressure fluid passage 40a and the high-pressure fluid inlet 51a of the high-pressure fluid passage 50a communicate with each other with the aid of a predetermined communicating pipe provided therebetween (the same applies to the case of the low-pressure fluid passage 40b and the high-pressure fluid passage 50b).

[0069] The expansion valve mechanism of the invention is capable of switching between cooling operation and heating operation according to need while suppressing the manufacturing cost to a low level with a simple configuration, and therefore can be widely applied to expansion valves to be installed in various air conditioning apparatuses and refrigeration/heating apparatuses.

[0070] Further, the passage switching device is capable of adjusting the flow rate in accordance with the pressure of the refrigerant flowing into the device, and therefore can be widely applied to passage switching devices to be installed in various fluid apparatuses.

Claims

1. An expansion valve mechanism (4, 300) that decompresses a high-temperature refrigerant, comprising:

   a first line (200a) having a first check valve (6) that permits the high-temperature refrigerant to flow only in one direction; and

   a second line (200b) having a second check valve (13) that permits the high-temperature refrigerant to flow in a direction opposite the one

direction, wherein the first line (200a) includes first low-load decompression means (7), and the second line (200b) includes second low-load decompression means (12), **characterised in that**

the first line (200a) further includes first high-load decompression means (9) that is disposed in parallel with the first low-load decompression means (7), and a first pressure-responsive valve (8) that releases the high-temperature refrigerant to the first high-load decompression means (9) only when the high-temperature refrigerant has a pressure higher than a predetermined pressure, and that the second further includes
second high-load decompression means (10) that is disposed in parallel with the second low-load decompression means (12), and a second pressure-responsive valve (11) that releases the high-temperature refrigerant to the second high-load decompression means (10) only when the high-temperature refrigerant has a pressure higher than a predetermined pressure.

Patentansprüche

1. Expansionsventilmechanismus (4, 300), der ein Hochtemperatur-Kältemittel dekomprimiert, aufweisend:

eine erste Leitung (200a) mit einem ersten Rückschlagventil (6), das dem Hochtemperatur-Kältemittel ermöglicht, nur in einer Richtung zu strömen; und
eine zweite Leitung (200b) mit einem zweiten Rückschlagventil (13), das dem Hochtemperatur-Kältemittel ermöglicht, in einer zu der einen Richtung entgegengesetzten Richtung zu strömen, wobei die erste Leitung (200a) ein erstes Niedriglast-Dekompressionsmittel (7) enthält und die zweite Leitung (200b) ein zweites Niedriglast-Dekompressionsmittel (12) enthält,
dadurch gekennzeichnet, dass
die erste Leitung (200a) weiterhin ein erstes Hochlast-Dekompressionsmittel (9), das parallel zu dem ersten Niedriglast-Dekompressionsmittel (7) angeordnet ist, sowie ein erstes, auf Druck ansprechendes Ventil (8), das das Hochtemperatur-Kältemittel nur zu dem ersten Hochlast-Dekompressionsmittel (9) freigibt, wenn das Hochtemperatur-Kältemittel einen Druck hat, der höher als ein vorbestimmter Druck ist, enthält und
dass die zweite Leitung weiterhin ein zweites Hochlast-Dekompressionsmittel (10), das parallel zu dem zweiten Niedriglast-Dekompressionsmittel (12) angeordnet ist, sowie ein zweites, auf Druck ansprechendes Ventil (11), das das Hochtemperatur-Kältemittel nur zu dem zweiten Hochlast-Dekompressionsmittel (10) freigibt, wenn das Hochtemperatur-Kältemittel einen Druck hat, der höher als ein vorbestimmter Druck ist, enthält.

Revendications

1. Mécanisme de détendeur (4, 300) qui détend un fluide frigorigène à haute température, comprenant :

une première conduite (200a) comportant un premier clapet de non-retour (6) qui permet au fluide frigorigène à haute température de s'écouler uniquement dans une direction ; et
une deuxième conduite (200b) comportant un deuxième clapet de non-retour (13) qui permet au fluide frigorigène à haute température de s'écouler dans une direction opposée à ladite une direction, dans lequel la première conduite (200a) comprend des premiers moyens de détente à faible charge (7) et la deuxième conduite (200b) comprend des deuxièmes moyens de détente à faible charge (12), **caractérisé en ce que** la première conduite (200a) comprend en outre des premiers moyens de détente à charge élevée (9) qui sont disposés parallèlement aux premiers moyens de détente à faible charge (7), et une première vanne sensible à la pression (8) qui libère le fluide frigorigène à haute température vers les premiers moyens de détente à charge élevée (9) uniquement lorsque le fluide frigorigène à haute température a une pression supérieure à une pression prédéterminée, et **en ce que** la deuxième conduite comprend en outre des deuxièmes moyens de détente à charge élevée (10) qui sont disposés parallèlement aux deuxièmes moyens de détente à faible charge (12), et une deuxième vanne sensible à la pression (11) qui libère le fluide frigorigène à haute température vers les deuxièmes moyens de détente à charge élevée (10) uniquement lorsque le fluide frigorigène à haute température a une pression supérieure à une pression prédéterminée.

FIG. 1

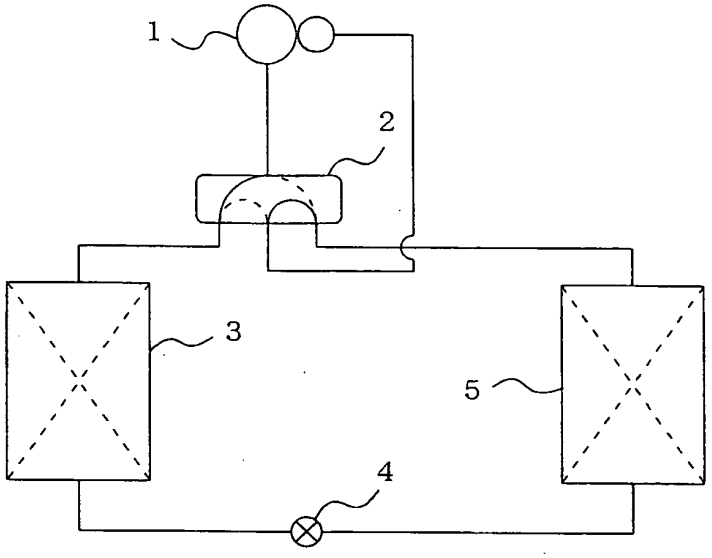

1: COMPRESSOR
2: FOUR-WAY SWITCHING VALVE
3: OUTDOOR HEAT EXCHANGER
4: EXPANSION VALVE MECHANISM
5: INDOOR HEAT EXCHANGER

FIG. 2

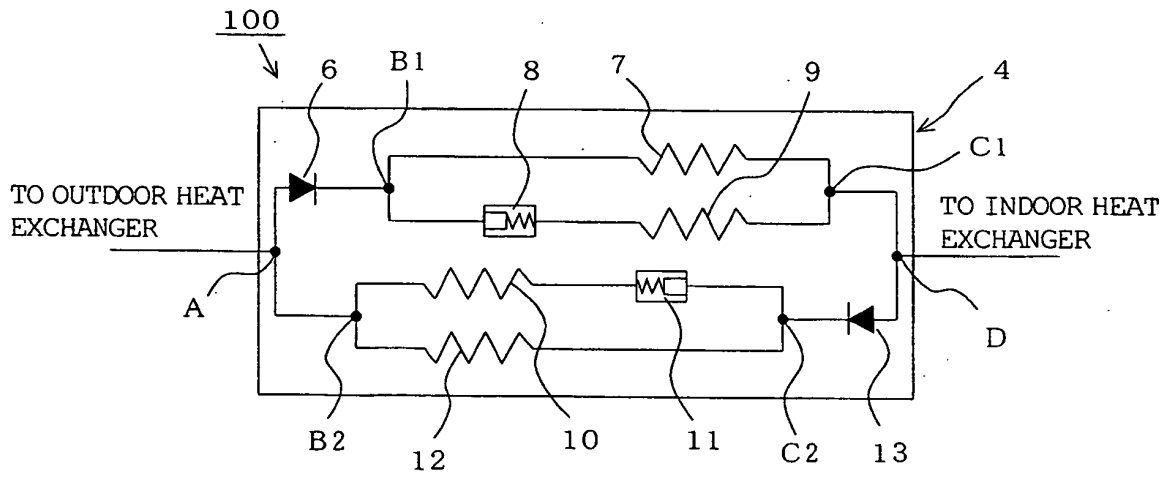

6, 13: CHECK VALVE
7, 12: LOW-LOAD CAPILLARY TUBE
8, 11: PRESSURE-RESPONSIVE VALVE
9, 10: CAPILLARY TUBE

FIG. 3

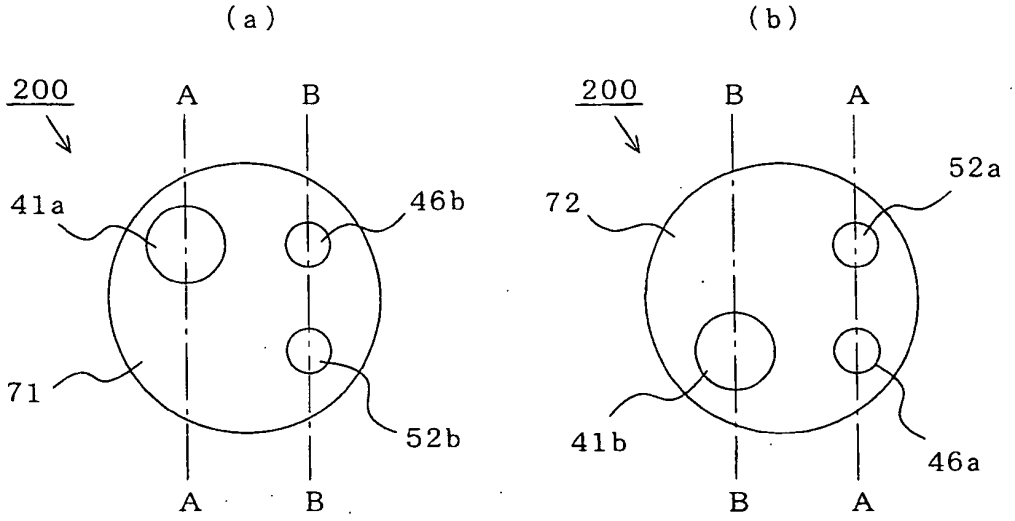
(a)
(b)
200
A
B
41a
46b
71
52b
200
B
A
52a
72
41b
46a

FIG. 4

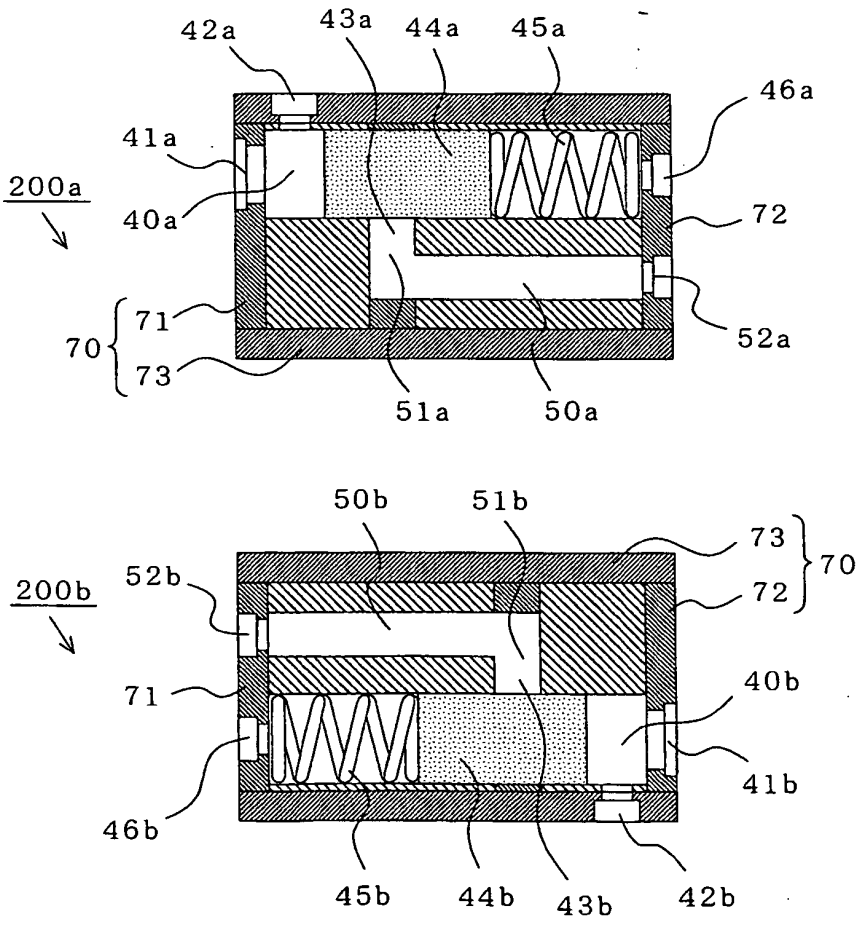
42a
43a
44a
45a
46a
41a
200a
40a
72
71
70
73
52a
51a
50a
50b
51b
73
70
200b
52b
72
71
40b
41b
46b
45b
44b
43b
42b

FIG. 5

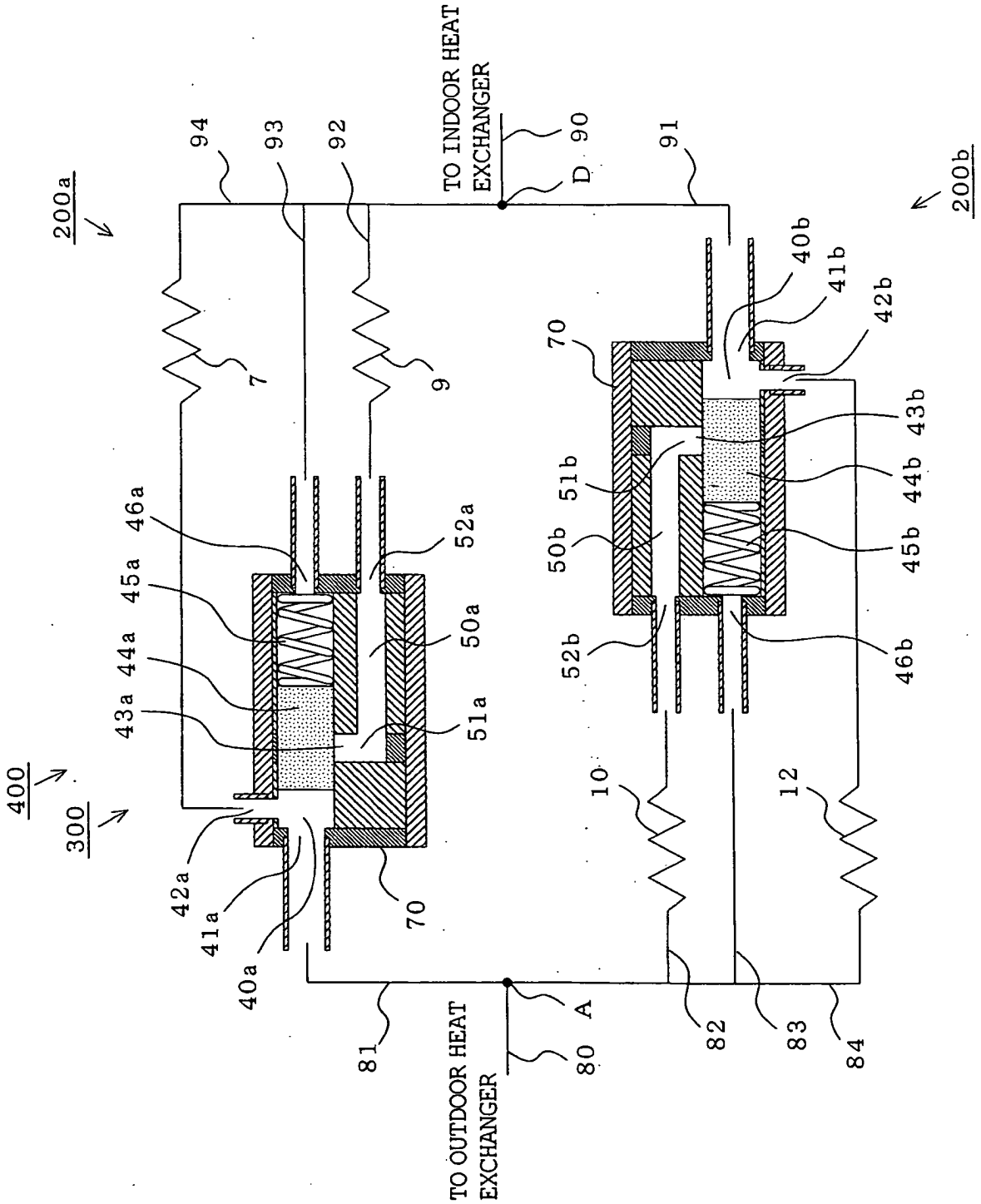
TO INDOOR HEAT EXCHANGER
TO OUTDOOR HEAT EXCHANGER
200a
200b
400
300
94
93
92
91
90
D
A
80
81
82
83
84
7
9
10
12
70
40a
41a
42a
43a
44a
45a
46a
50a
51a
52a
40b
41b
42b
43b
44b
45b
46b
50b
51b
52b

FIG. 6

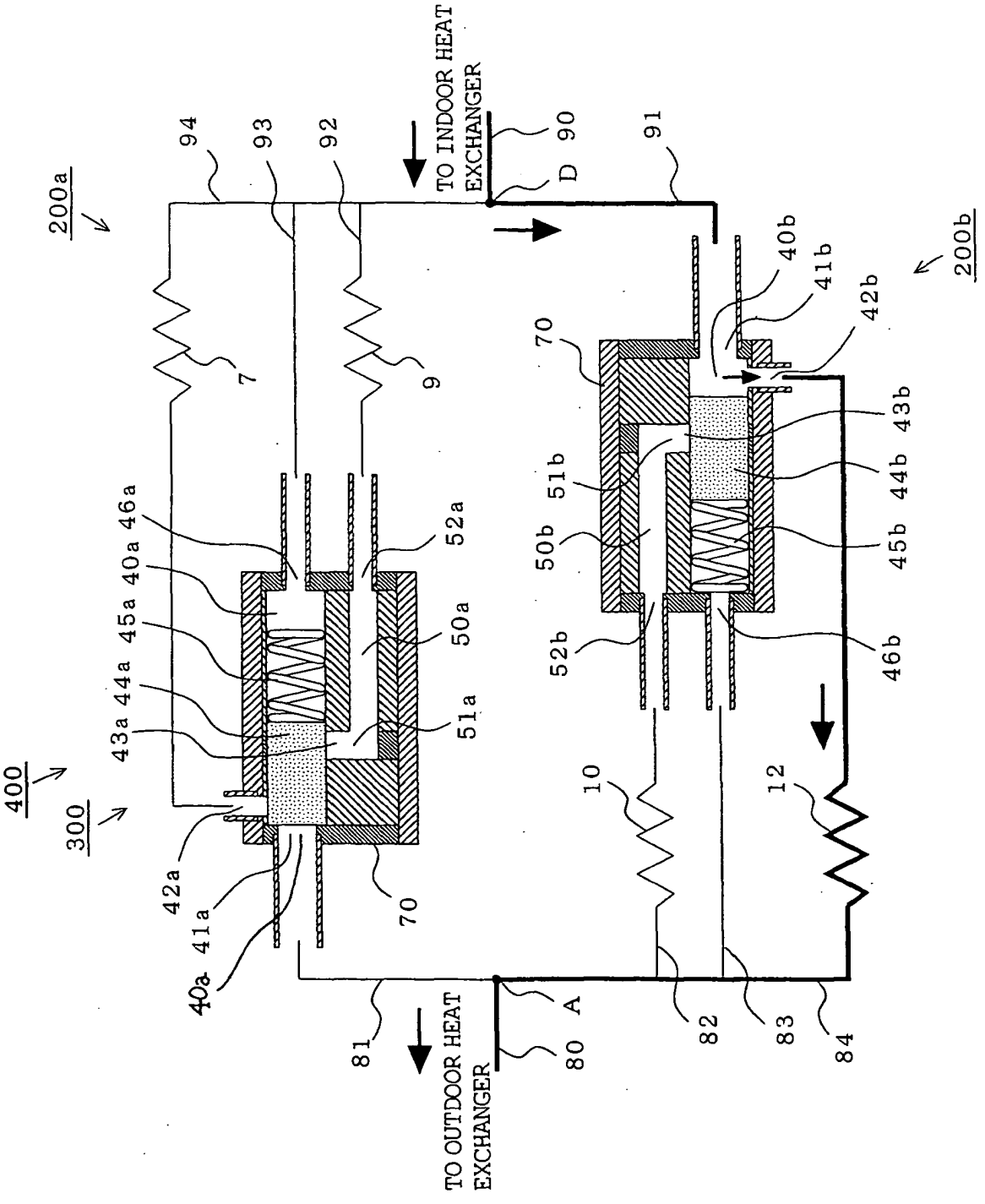
TO INDOOR HEAT EXCHANGER
TO OUTDOOR HEAT EXCHANGER
200a
200b
400
300
94
93
92
90
D
91
7
9
70
40b
41b
42b
43b
44b
45b
46b
51b
50b
52b
46a
40a
45a
44a
43a
42a
41a
40a
52a
50a
51a
70
10
12
81
80
A
82
83
84

F I G. 7

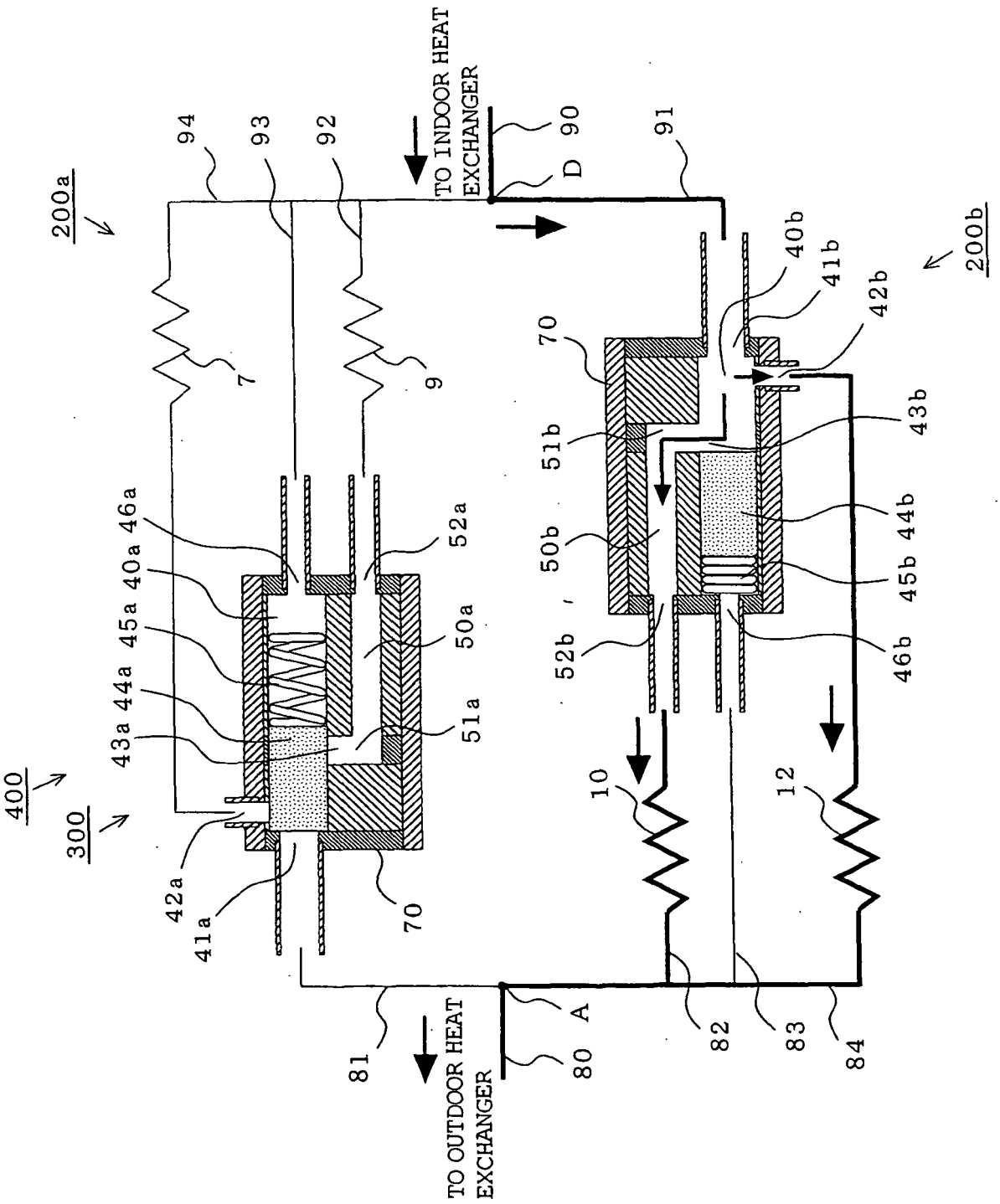
TO INDOOR HEAT EXCHANGER
TO OUTDOOR HEAT EXCHANGER
200a
200b
300
400
94
93
92
91
90
D
7
9
70
40b
41b
42b
43b
44b
45b
46b
51b
50b
52b
46a
40a
45a
44a
43a
52a
50a
51a
42a
41a
10
12
81
80
A
82
83
84

FIG. 8

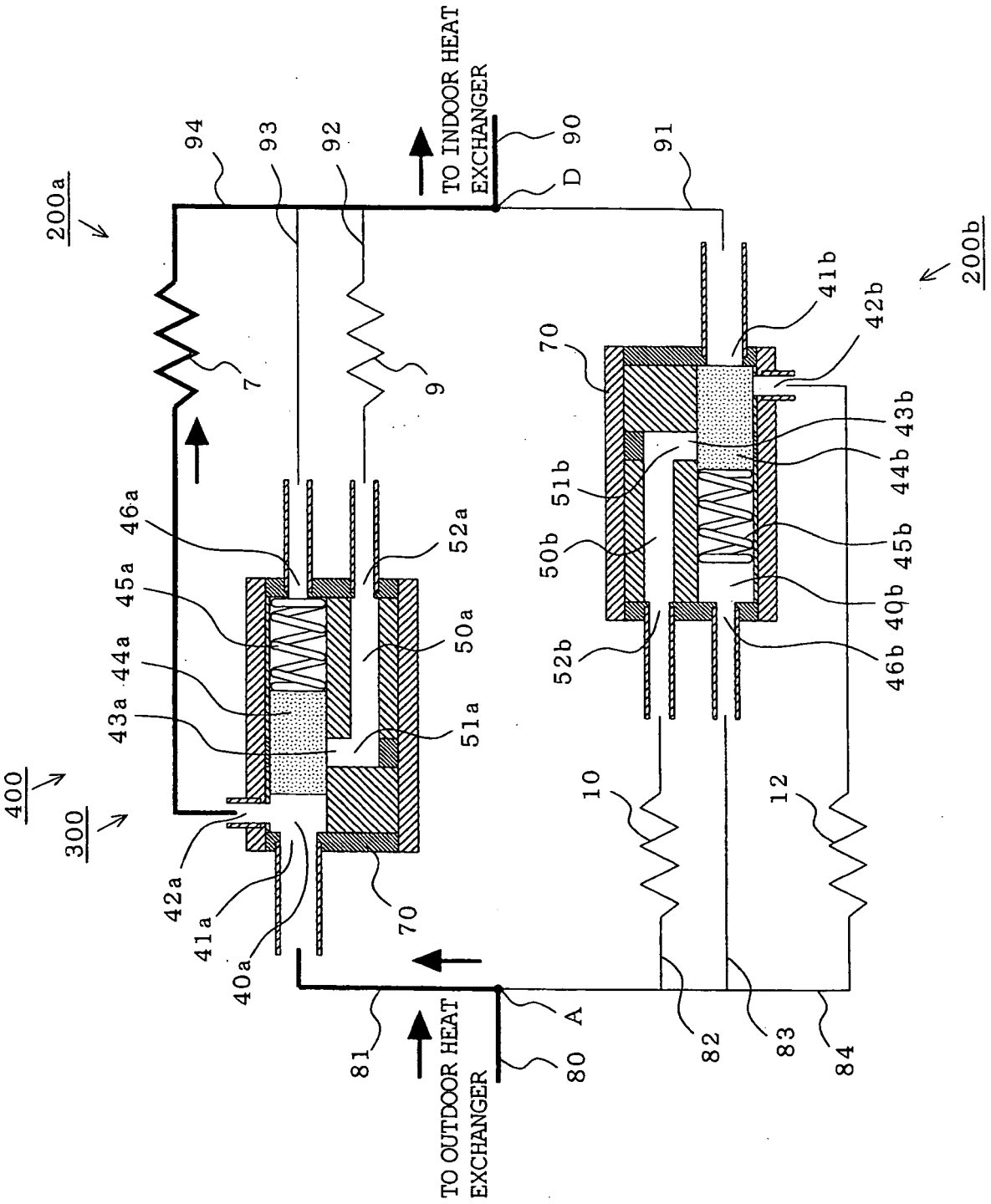
TO INDOOR HEAT EXCHANGER
TO OUTDOOR HEAT EXCHANGER
200a
200b
400
300
94
93
92
91
90
D
A
80
81
82
83
84
7
9
10
12
70
41b
42b
43b
44b
45b
46b
40b
50b
51b
52b
46a
45a
44a
43a
42a
41a
40a
50a
51a
52a

FIG. 9

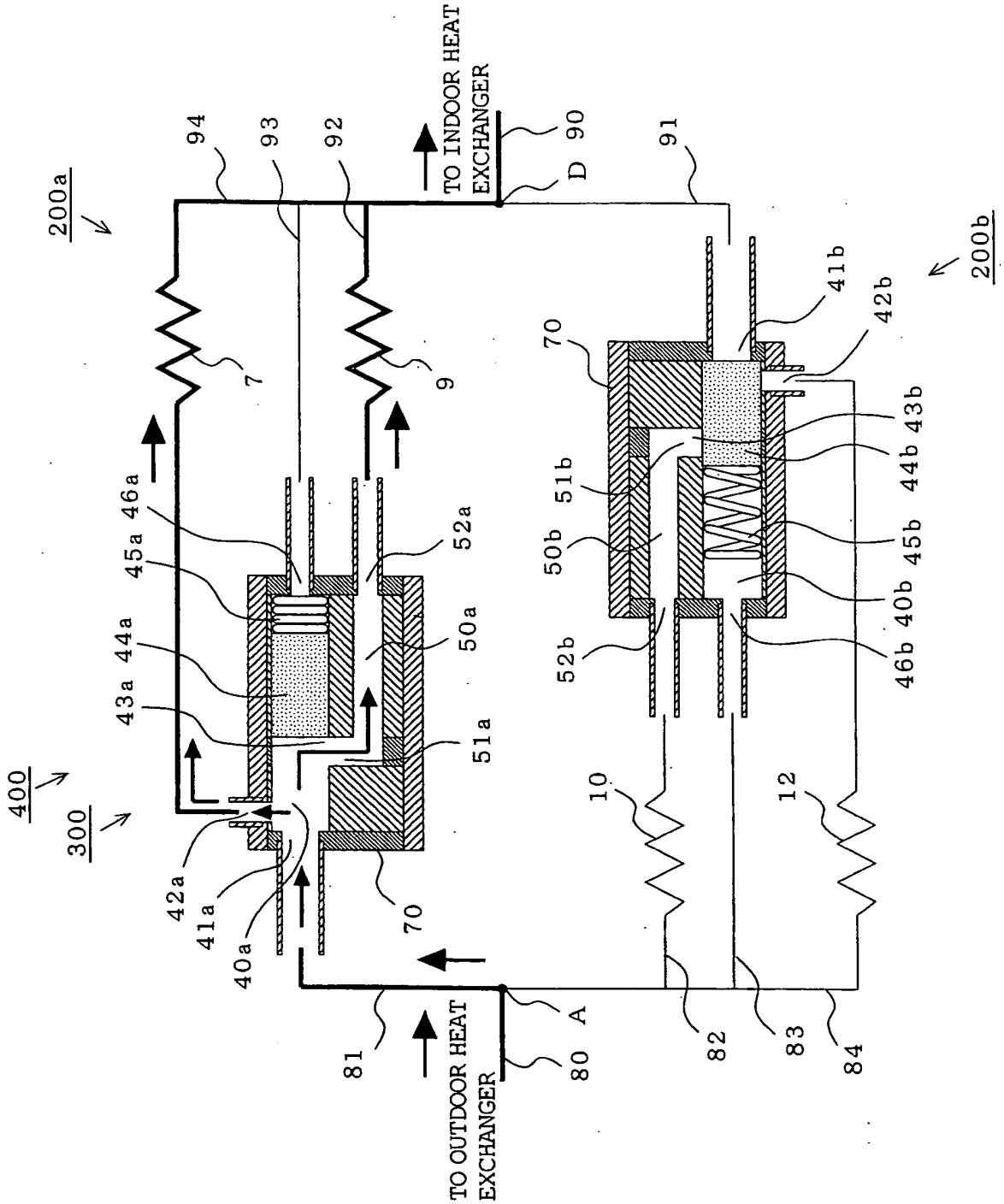
TO INDOOR HEAT EXCHANGER
TO OUTDOOR HEAT EXCHANGER
200a
200b
400
300
94
93
92
91
90
D
A
80
81
82
83
84
7
9
10
12
70
41b
42b
43b
44b
45b
46b
40b
50b
51b
52b
46a
45a
44a
43a
42a
41a
40a
50a
51a
52a

REFERENCES CITED IN THE DESCRIPTION

This list of references cited by the applicant is for the reader's convenience only. It does not form part of the European patent document. Even though great care has been taken in compiling the references, errors or omissions cannot be excluded and the EPO disclaims all liability in this regard.

Patent documents cited in the description

- JP 2002106994 A **[0003] [0004]**
- JP 2005083690 A **[0008]**