US 20090205593A1

(19) United States

(12) Patent Application Publication

(10) Pub. No.: US 2009/0205593 A1

(43) Pub. Date: Aug. 20, 2009

Huang

(54) **FLOW ADJUSTING VALVE FOR COMBUSTION GAS**

(76) Inventor: **I-Hua Huang**, Taipei City (TW)

Correspondence Address:
BACON & THOMAS, PLLC
625 SLATERS LANE, FOURTH FLOOR
ALEXANDRIA, VA 22314-1176 (US)

(21) Appl. No.: **12/071,075**

(22) Filed: **Feb. 15, 2008**

Publication Classification

(51) **Int. Cl.**
F01L 9/04 (2006.01)

(52) **U.S. Cl.** **123/90.11**; 251/65

(57) **ABSTRACT**

A flow adjusting valve for combustion gas being provided with an air chamber between its air intake port and its air output port, the air chamber has an inlet connecting with the air intake port, and the air chamber is provided with a valve plug to block between the air intake port and the inlet, the valve plug is always kept at a position to close the inlet of the air chamber; when the electromagnetic device is electrically turned on, it generates a magnetic repulsion force against the permanent magnet to push the valve plug to open the inlet; when a transient pressure of combustion gas is larger than the magnetic repulsion force, the valve plug will close immediately, this can prevent the situation of gas leaking induced by overly large pressure of the gas supplied.

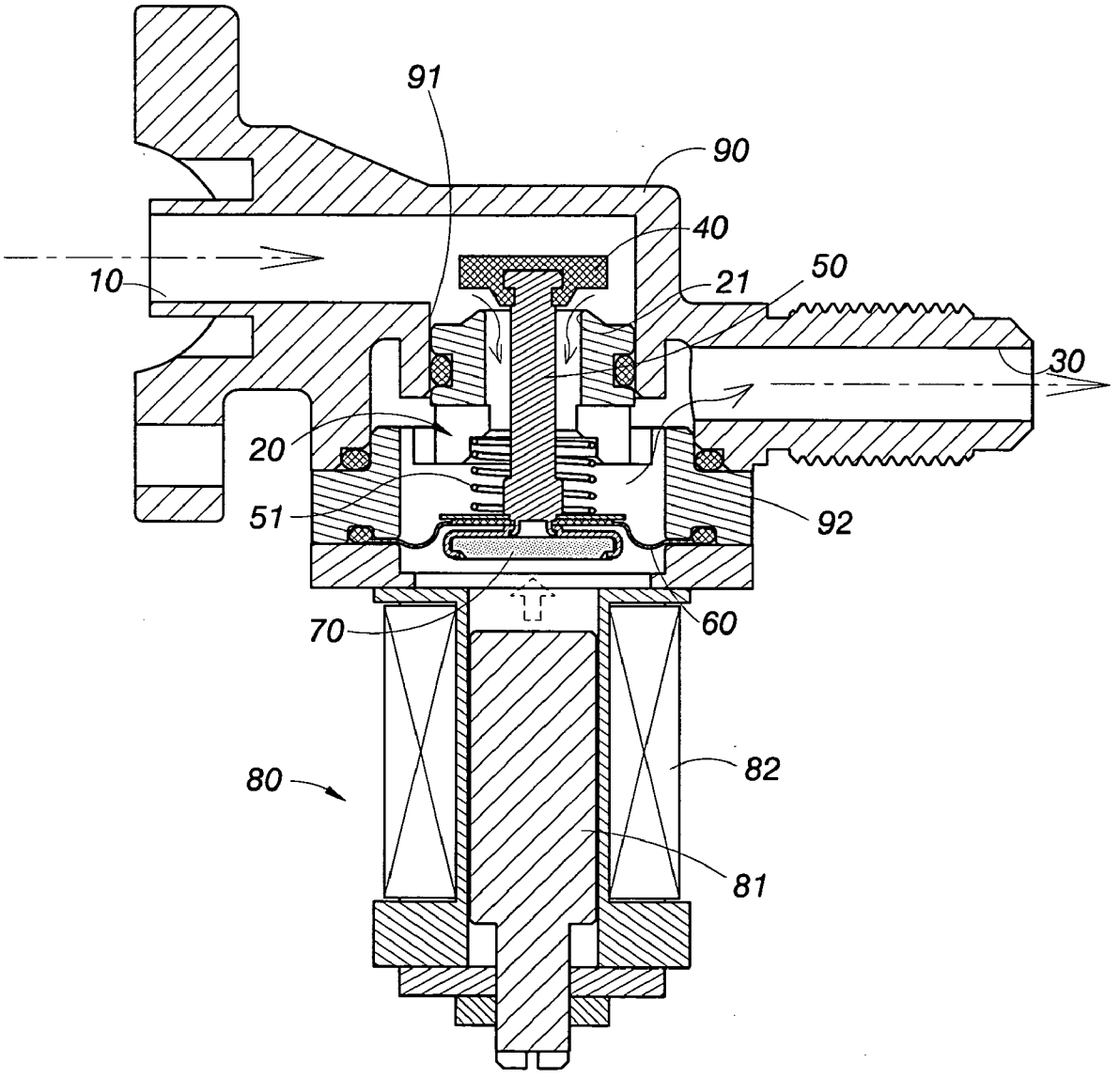

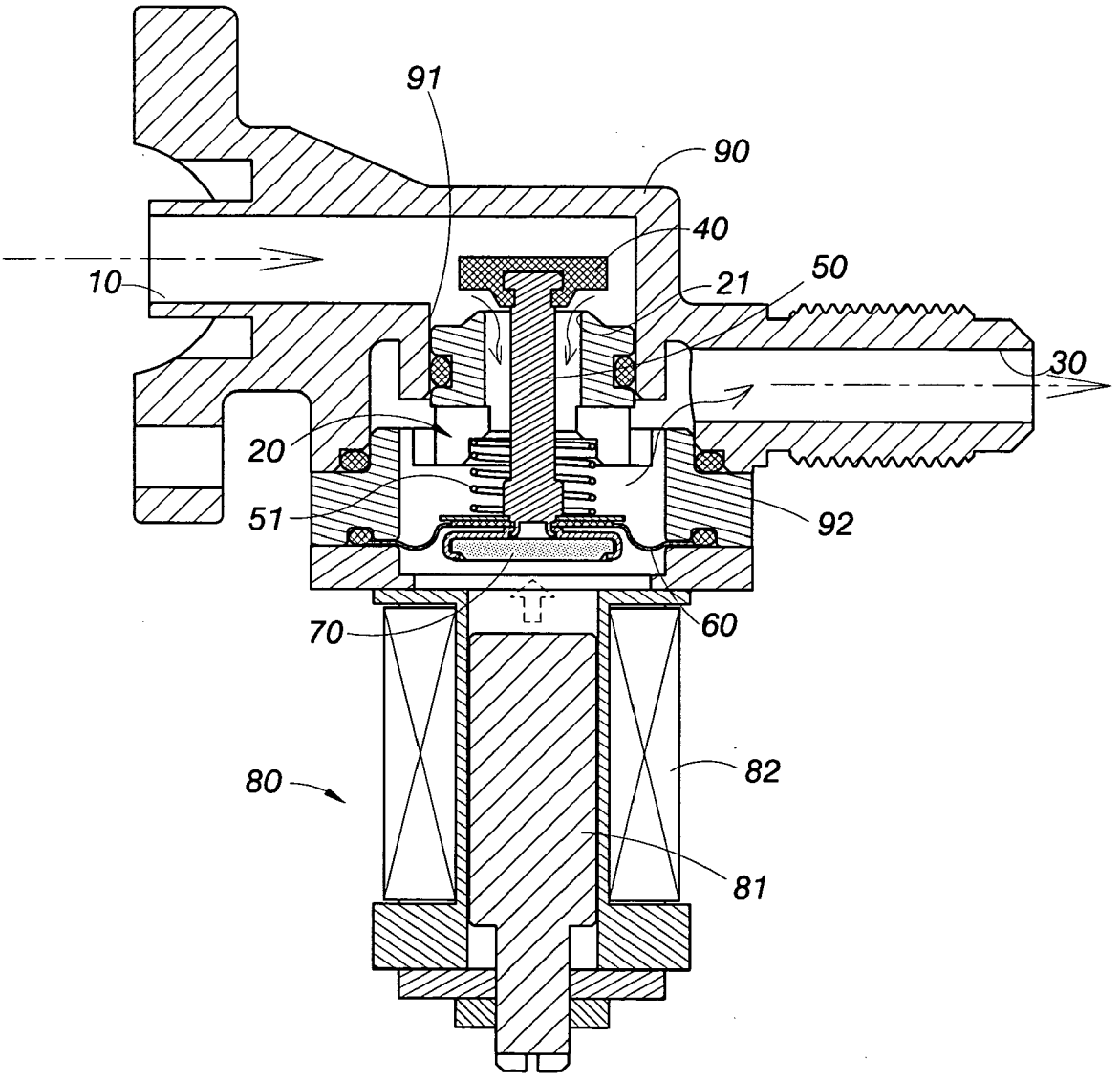

FIG. 1

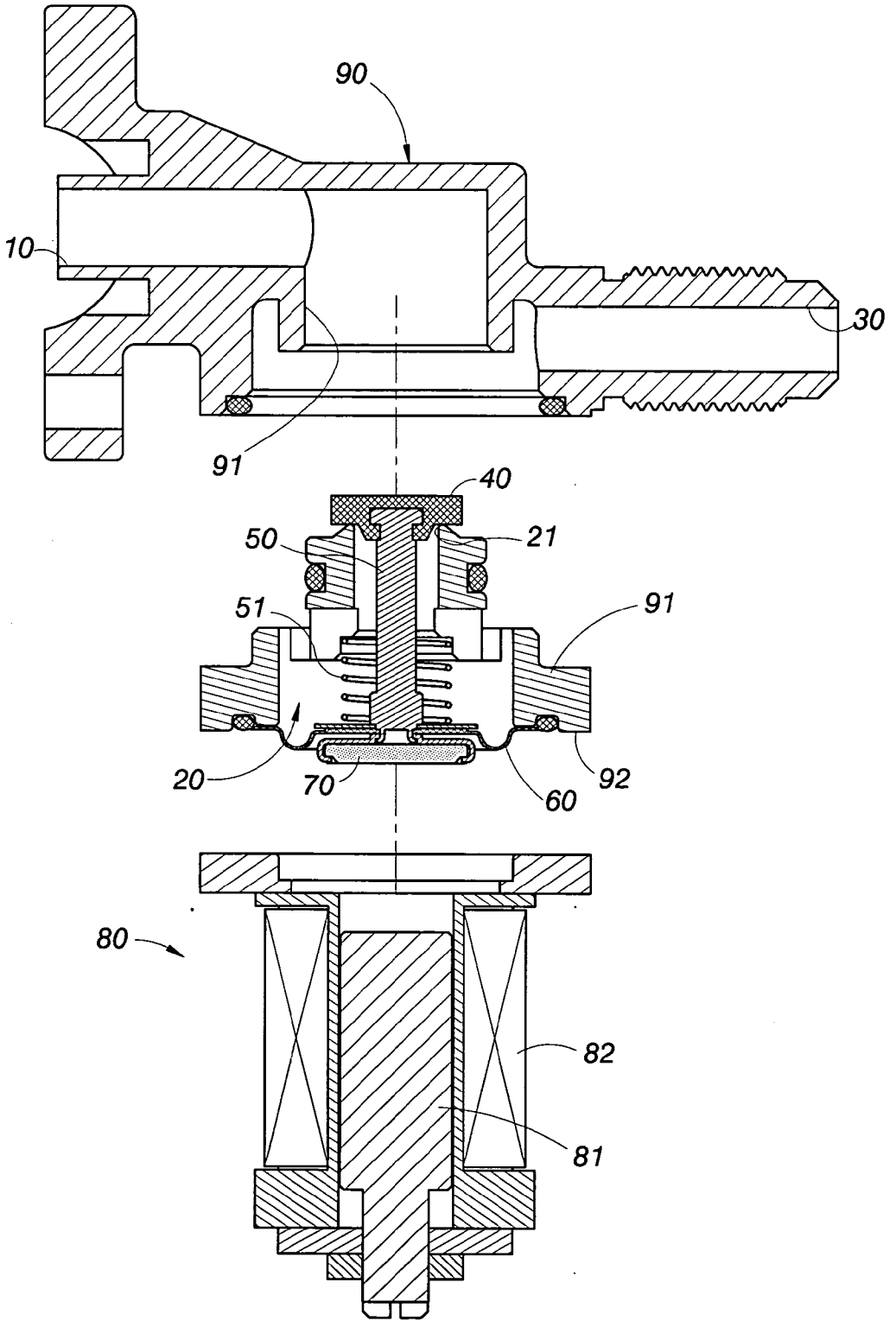

FIG.2

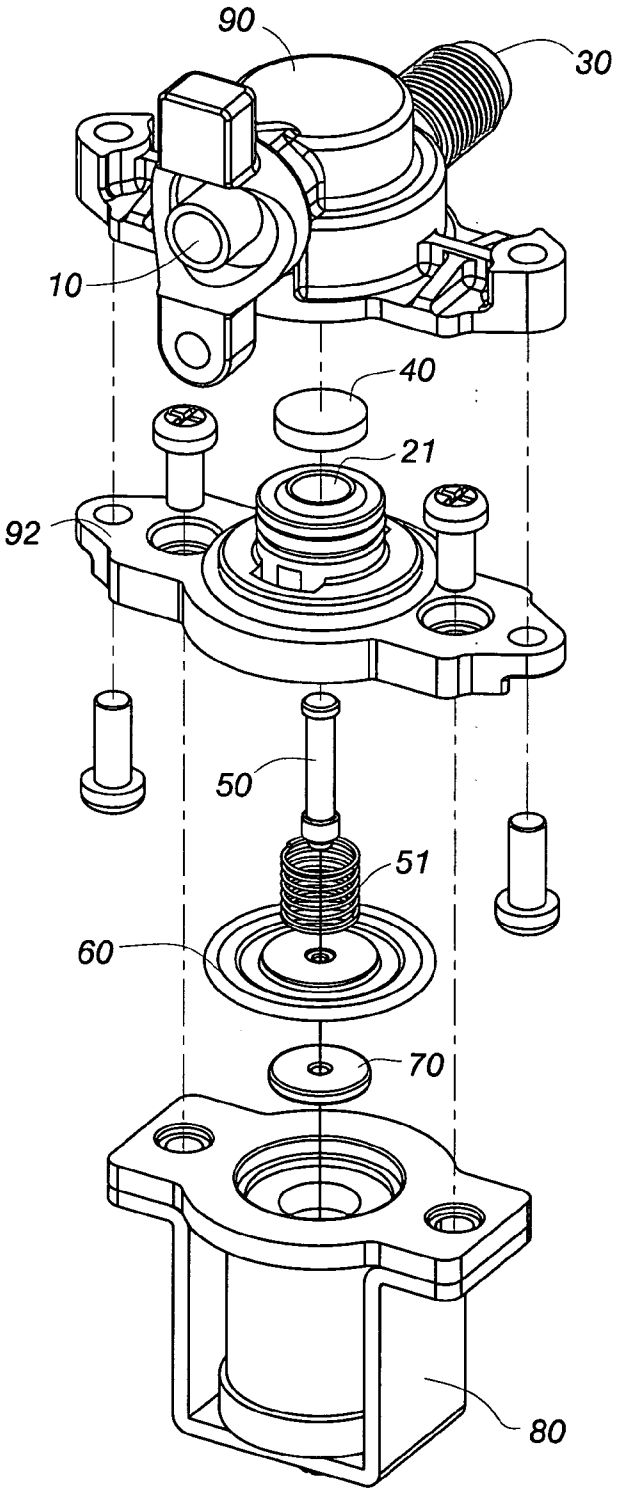

FIG.3

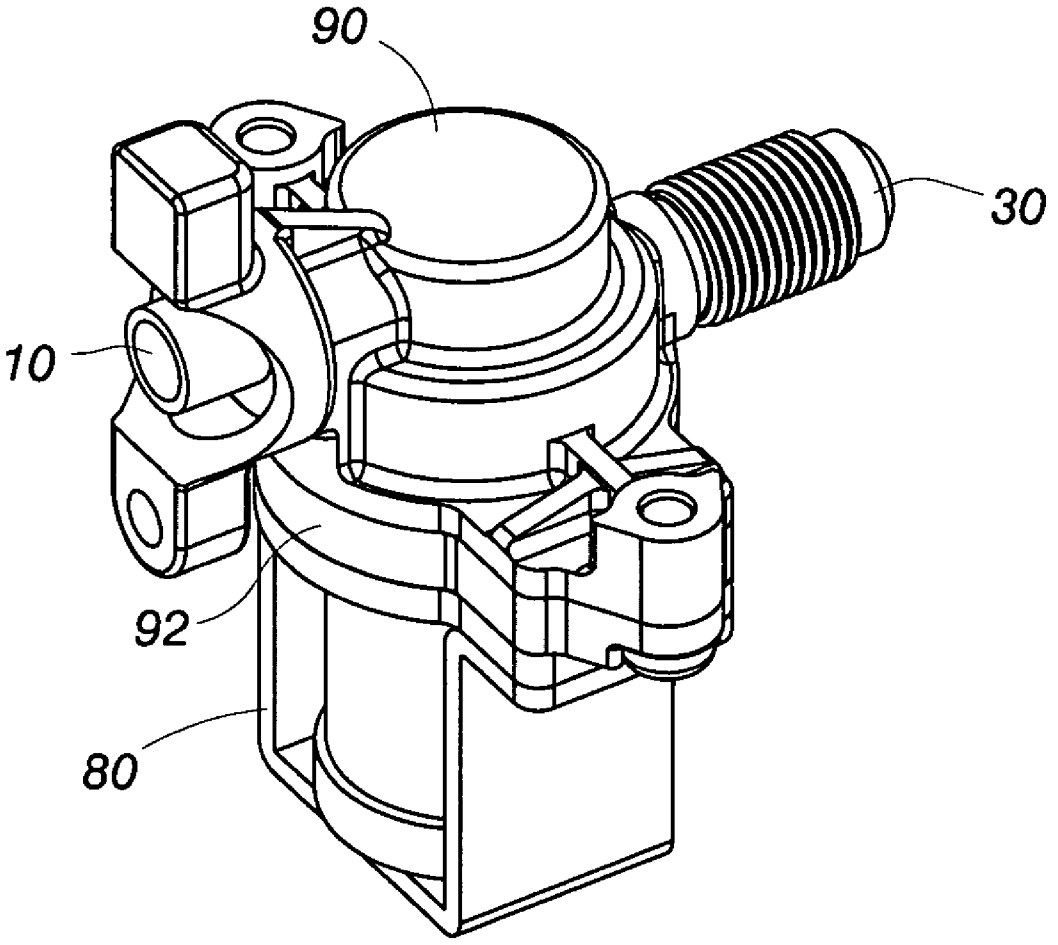

FIG.4

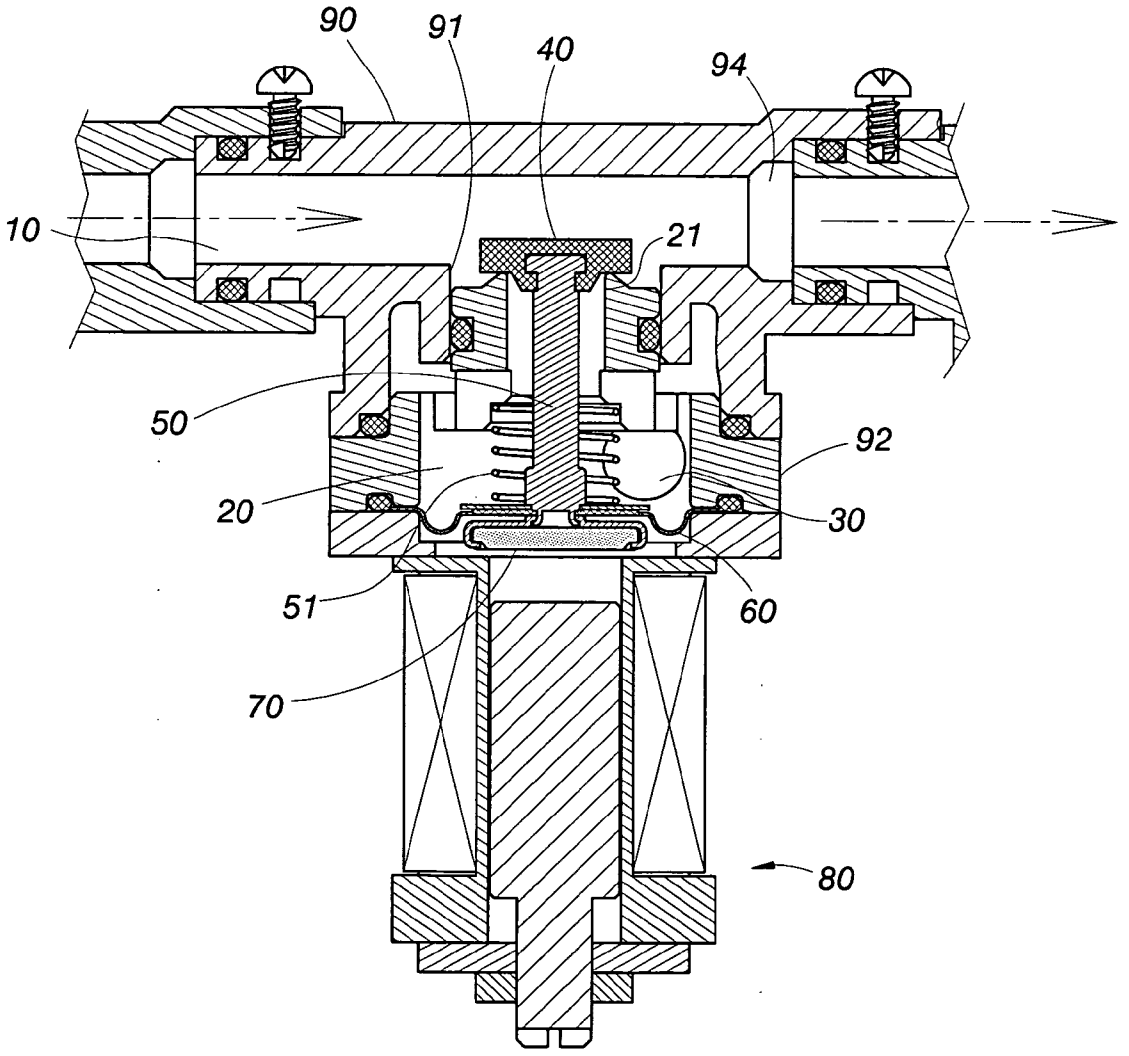

FIG.5

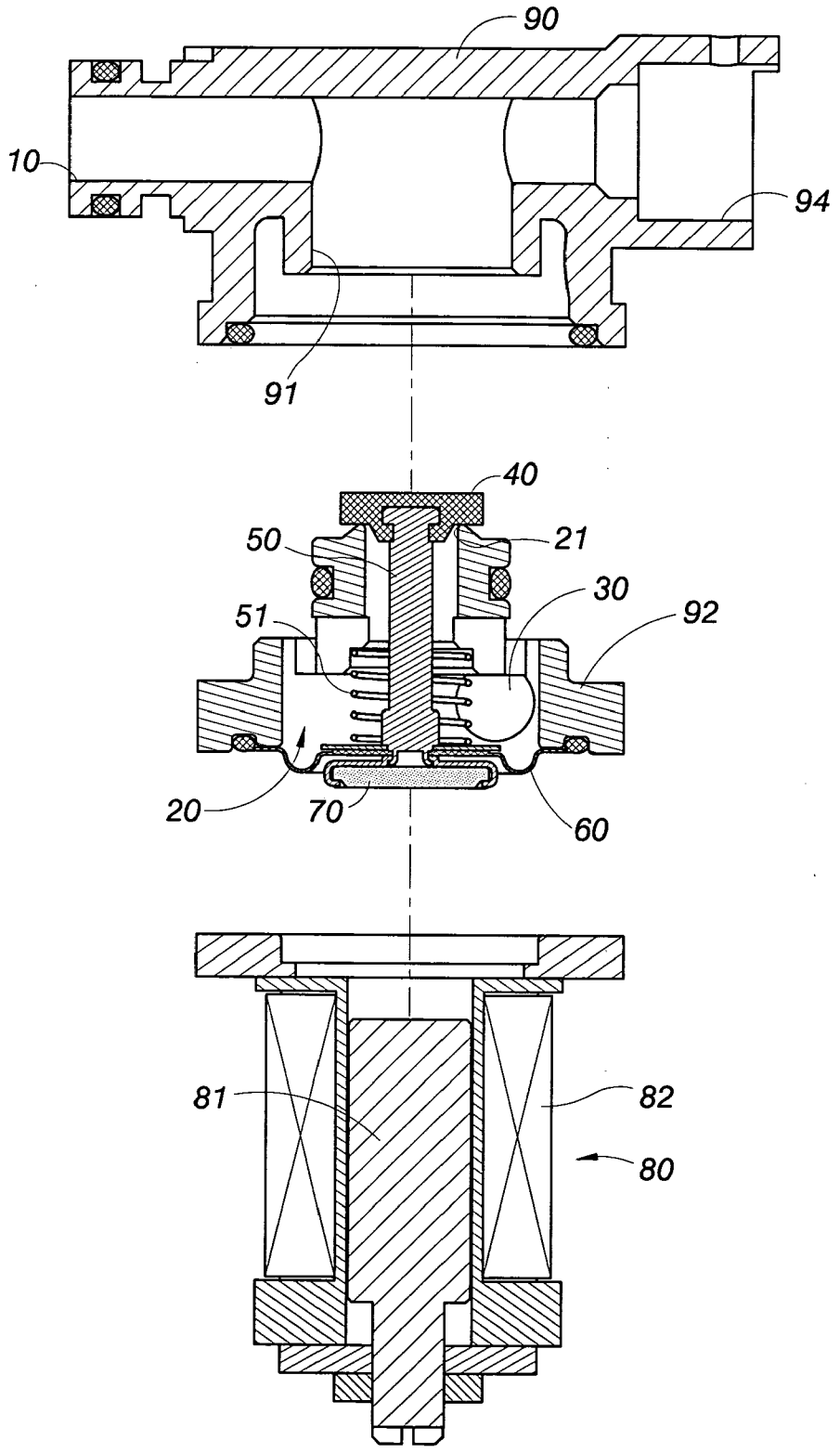

FIG.6

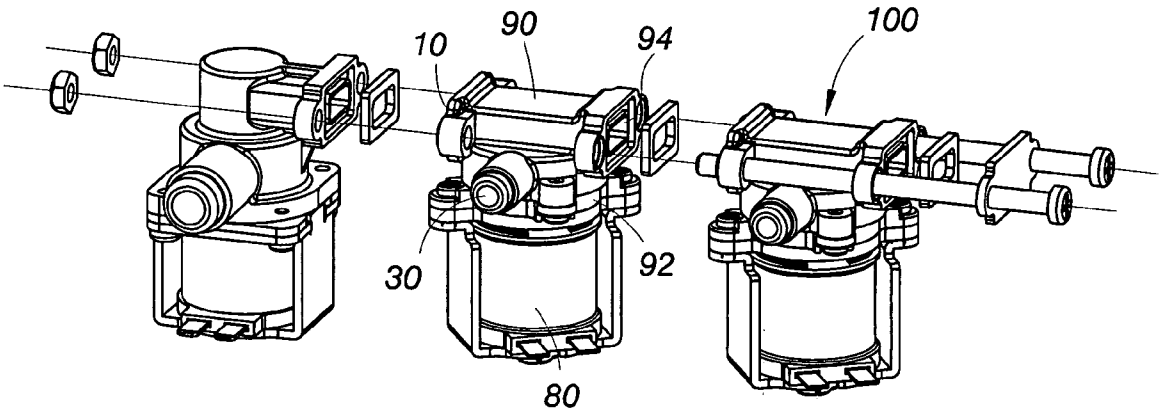

FIG.7

FLOW ADJUSTING VALVE FOR COMBUSTION GAS

BACKGROUND OF THE INVENTION

[0001] 1. Field of the Invention

[0002] The present invention is related to a technique for a gas combustion valve, and especially to a flow adjusting valve for combustion gas adjusting by using magnetic attraction and magnetic repulsion forces.

[0003] 2. Description of the Prior Art

[0004] An electromagnetic gas combustion valve of a normal utensil for combustion gas (such as a gas stove or a gas combustion water heater) is provided on a flow path of the vale itself with a vale plug set, the vale plug set includes a valve plug at an air intake port, a spring abutting against the vale plug, an iron sheet connecting with the vale plug and an electromagnetic device that can generate magnetic attraction force on the iron sheet after electrically turning on.

[0005] When the electromagnetic device has not yet been electrically turned on, the vale plug is kept at the position to close the air intake port under the abutting force of the spring; when the electromagnetic device is electrically turned on, it generates magnetic attraction force to attract the iron sheet to displace the vale plug and to open the electromagnetic device, and the spring is given with an elastic restoring force; and when the electromagnetic device stops action, the spring makes the vale plug restore its original position to close the air intake port under the abutting action of the restoring force of the spring.

[0006] The above conventional electromagnetic gas combustion valve has the following defects:

[0007] 1. The state of opening/closing between the vale plug and the air intake port is decided by whether the electromagnetic device generates a magnetic attraction force after being electrically turned on, thereby it can only control the on/off action, the adjusting of flow needs an additional flow adjusting mechanism to control.

[0008] 2. Closing of the air intake port by the vale plug is effected under the abutting action of the restoring force of the spring, if the spring is overly frequently used, a problem of elastic fatigue may occur to make the valve plug untightly close the air intake port.

[0009] 3. If the air intake port has overly large transient pressure of combustion gas (especially when using natural gas) under the state of being closed by the vale plug, the plunger of the vale plug will be pushed away from the air intake port by the overly large pressure to induce leaking of the combustion gas.

[0010] 4. If the transient pressure of combustion gas is overly large under the state of opening of the air intake port, overly large transient supplying amount of the combustion gas may be induced, burning fire on the stove may have a phenomenon of bursting combustion.

[0011] In view of the above problems resided in the prior art, the inventor of the present invention designed and provided the present invention "a flow adjusting valve for combustion gas" to solve the defects resided in the above conventional gas combustion valve.

SUMMARY OF THE INVENTION

[0012] The main object of the present invention is to provide a flow adjusting valve for combustion gas for adjusting the degree of opening between a valve plug and an air intake port by controlling the magnitude of magnetic repulsion force of an electromagnetic device; and when the transient pressure of combustion gas is larger than the magnetic repulsion force, the valve plug will close immediately, this can prevent the situation of gas leaking induced by overly large pressure of the gas supplied.

[0013] In order to achieve the object, the present invention is provided on the flow adjusting valve for combustion gas with the air intake port for entering of combustion gas, an air chamber connecting with the air intake port and an air output port connecting with the air chamber for releasing the combustion gas.

Wherein:

[0014] the air chamber has an inlet connecting with the air intake port, and the air chamber is provided with the valve plug having a diameter larger than that of the inlet to block between the air intake port and the inlet, the bottom of the valve plug is connected with a valve rod of which the bottom is extended to the tailing end of the air chamber, the bottom of the valve rod is provided with an air tight elastic diagram for sealing the bottom of the air chamber, the air tight elastic diagram is provided thereon with a permanent magnet; the air chamber is provided outside of it with the electromagnetic device that is in cooperation with the permanent magnet.

[0015] When the electromagnetic device is not operated, a magnetic attraction force is generated between the electromagnetic device and an iron core of the electromagnetic device, through the valve rod, the magnetic attraction force always keeps the position of the valve plug at the inlet to close the air chamber; when the electromagnetic device is electrically turned on, it generates a magnetic repulsion force against the permanent magnet to push the valve plug and the valve rod to open the inlet, thereby the combustion gas can be released from the air output port after it enters the air chamber from the air output port and the inlet sequentially, and thereby the degree of opening between the valve plug and the air inlet can be adjusted by controlling the magnitude of magnetic repulsion force generated by the electromagnetic device.

[0016] In comparison with the prior art, the present invention not only can adjust the magnitude of flow of the combustion gas, but also can make very tight sealing when the valve plug closes the inlet, because the valve plug is provided between the air intake port and the inlet, and the larger the pressure at the air intake port is, the larger the force of abutting of the valve plug against the inlet will be; therefore, the valve plug will not be pushed away to make air leaking.

[0017] And more, under the state that the valve plug opens the inlet by the magnetic repulsion force, when the transient pressure of combustion gas is larger than the magnetic repulsion force, the valve plug will abut against the inlet immediately, this can prevent the situation of bursting combustion of burning fire on a stove by overly large pressure of the gas supplied.

[0018] The present invention will be apparent in its mode of operation according to its technical measures after reading the detailed description of the preferred embodiment thereof in reference to the accompanying drawings.

BRIEF DESCRIPTION OF THE DRAWINGS

[0019] FIG. **1** is a sectional schematic view showing the structure of a first embodiment of the present invention;

[0020] FIG. **2** is a sectional schematic view anatomically showing the first embodiment of the present invention;

[0021] FIG. **3** is an anatomic perspective view of the first embodiment of the present invention;

[0022] FIG. **4** is a perspective view showing the appearance of the first embodiment of the present invention;

[0023] FIG. **5** is a sectional view of a second embodiment of the present invention after assembling;

[0024] FIG. **6** is a sectional schematic view anatomically showing the second embodiment of the present invention;

[0025] FIG. **7** is a perspective schematic view showing serially connecting of the second embodiment of the present invention.

DETAILED DESCRIPTION OF THE PREFERRED EMBODIMENT

[0026] FIG. **1** shows a first embodiment of a flow adjusting valve for combustion gas of the present invention, in this embodiment, the flow control valve for combustion gas is provided with an air intake port **10** for entering of combustion gas, an air chamber **20** connecting with the air intake port **10** and an air output port **30** connecting with the air chamber **20** for releasing the combustion gas.

[0027] Wherein: the air chamber **20** has an inlet **21** connecting with the air intake port **10**, and the air chamber **20** is provided with a valve plug **40** having a diameter larger than that of the inlet **21** to block between the air intake port **10** and the inlet **21**, the bottom of the valve plug **40** is connected with a valve rod **50** of which the bottom is extended to the tailing end of the air chamber **20**, the bottom of the valve rod **50** is provided with an air tight elastic diagram **60** for sealing the bottom of the air chamber **20**, the air tight elastic diagram **60** is provided thereon with a permanent magnet **70**; the air chamber **20** is provided outside of it with the electromagnetic device **80** that is in cooperation with the permanent magnet **70**.

[0028] The electromagnetic device **80** further includes an iron core **81** and a set of coil **82** wound about the iron core **81**, the coil **82** can make the iron core **81** generate magnetic poles of different strengths in pursuance of the magnitudes of electric fluxes, the magnetic poles correspond with the permanent magnet **70** and are of the same magnetic poles as that of an opposite surface of the latter, thereby the electromagnetic device **80** will generate a magnetic repulsion force against the permanent magnet **70**.

[0029] With the above structure, the permanent magnet **70** will generate a magnetic attraction force because of the iron core **81** of the electromagnetic device **80** when the electromagnetic device is not operated to make the permanent magnet **70** keep an action force toward the electromagnetic device **80**, the action force is acted on the valve plug **40** through the valve rod **50**, so that the valve plug **40** is always kept at the position to close the inlet **21** of the air chamber **20**.

[0030] By virtue that the valve plug **40** is provided between the air intake port **10** and the inlet **21**, the valve plug **40** has a diameter larger than that of the inlet **21**, under the state that the valve plug **40** closes the inlet **21**, the larger the pressure at the air intake port **10** is, the larger the force of abutting of the valve plug **40** against the inlet **21** will be, tighter closing can be effected, therefore, the valve plug **40** will not be pushed away to make a state of air leaking.

[0031] When the electromagnetic device **80** is electrically turned on, as is mentioned above, it generates a magnetic repulsion force against the permanent magnet **70** to push the valve rod **50** and the valve plug **40** to open the inlet **21**, thereby the combustion gas can be released from the air output port **30** after it enters the air chamber **20** from the air output port **10** and the inlet **21** sequentially; and by virtue that the coil **82** can make the iron core **81** generate magnetic poles of different strengths in pursuance of the magnitudes of electric fluxes as stated above, thereby the degree of opening between the valve plug **40** and the air inlet **21** can be adjusted by controlling the magnitude of magnetic repulsion force generated by the electromagnetic device **80**.

[0032] And more, under the state that the valve plug **40** opens the inlet **21** by the magnetic repulsion force, when the transient pressure of combustion gas at the air intake port **10** is larger than the magnetic repulsion force, the valve plug **40** will abut against the inlet **21** immediately, this can prevent the situation of bursting combustion of burning fire on a stove by overly large pressure of the gas supplied.

[0033] When in practicing, the bottom of the iron core **81** can be exposed to the outside of the electromagnetic device **80**, for the convenience of adjusting the distance between the iron core **81** from the permanent magnet **70** to thereby adjust the magnitude of the magnetic repulsion force or the magnetic attraction force between the iron core **81** and the permanent magnet **70**.

[0034] As shown in FIGS. **2** and **3**, when in practicing of the present invention, the air intake port **10** and the air output port **30** can be provided on an upper housing **90**, the upper housing **90** is provided between the air intake port **10** and the air output port **30** with an engaging port **91** to engage with a lower housing **92**, the air chamber **20** is provided on the lower housing **92** and extends through the latter, in order that the inlet **21** is on the top of the lower housing **92**, the air tight elastic diagram **60** is on the bottom of the lower housing **92** to seal the air chamber **20**, the permanent magnet **70** is provided beneath the air tight elastic diagram **60**, while the electromagnetic device **80** can be fixed below the lower housing **92** in opposition to the permanent magnet **70**.

[0035] Moreover, the valve rod **50** further has an elastic element **51** which constantly pushes the valve plug **40** to keep the latter at the position to close the air intake port, thereby to help the valve plug **40** to close the inlet **21** more tightly; other advantages resided in the present invention are that, the air chamber **20**, the valve plug **40**, the valve rod **50**, the air tight elastic diagram **60** and the permanent magnet **70** are mounted in advance on the lower housing **92**, and after connecting of the lower housing **92** with the upper housing **90**, the electromagnetic device **80** is fixed below the lower housing **92**, this is superior in convenient assembling, the appearance after assembling is shown in FIG. **4**.

[0036] FIGS. **5** and **6** are sectional schematic views showing the structure of the second embodiment of the present invention, in which an air intake port **10**, an air chamber **20**, an air output port **30**, a valve plug **40**, a valve rod **50**, an air tight elastic diagram **60**, a permanent magnet **70** and a electromagnetic device **80** etc. are depicted, the way and principle of action of them are same as those of the first embodiment, and no further narration is necessary here; besides, the position relations of the following members are same as those of the first embodiment too, i.e.: the intake port **10** is provided on the upper housing **90** which further has an engaging port **91** to engage with a lower housing **92**, the air chamber **20** is provided on the lower housing **92** and extends through the latter, in order that the inlet **21** is on the top of the lower housing **92**, the air tight elastic diagram **60** is on the bottom of the lower

housing **92** etc. The flow path of the combustion gas therein still is in the sequence from the air intake port **10**, the inlet **21**, the air chamber **20** to the air output port **30**, and then the combustion gas is released outsides.

[0037] The difference of the second embodiment from the first embodiment is resided in that, the air output port **30** is provided on the lower housing **92** to communicate with the air chamber **20**, the upper housing **90** is further provided with a serially connecting port **94** in communication with the air intake port **10**. The object that the second embodiment is further provided with the serially connecting port **94** just as shown in FIG. **7**, when the present invention is used on a system having a plurality of stoves and needs to serially connect a plurality of flow adjusting valves for combustion gas, by the fact that the air intake port **10** is communicated directly with the serially connecting port **94**, the serially connecting port **94** can be used to serially connect a combustion gas inlet of some combustion gas valve **100**.

[0038] The second embodiment still has the advantages of the first embodiment in assembling.

[0039] The preferred embodiments shown and described are only for illustrating the present invention, and not for giving any limitation to the scope of the present invention; it will be apparent to those skilled in this art that various modifications or changes without departing from the spirit of this invention shall also fall within the scope of the appended claims.

1. A flow adjusting valve for combustion gas being provided with an air intake port for entering of combustion gas, an air chamber connecting with said air intake port and an air output port connecting with said air chamber for releasing said combustion gas, wherein:

said air chamber has an inlet connecting with said air intake port, and said air chamber is provided with a valve plug having a diameter larger than that of said inlet to block between said air intake port and said inlet, a bottom of said valve plug is connected with a valve rod of which a bottom is extended to a tailing end of said air chamber, said bottom of said valve rod is provided with an air tight elastic diagram for sealing a bottom of said air chamber, said air tight elastic diagram is provided thereon with a permanent magnet; said air chamber is provided outside of it with an electromagnetic device that is in cooperation with said permanent magnet;

when said electromagnetic device is not operated, a magnetic attraction force is generated between said electromagnetic device and an iron core of said electromagnetic device, said valve plug is always kept at a position to close said inlet of said air chamber; when said electromagnetic device is electrically turned on, it generates a magnetic repulsion force against said permanent magnet to push said valve plug and said valve rod to open said inlet, thereby said combustion gas is released from said air output port after it enters said air chamber from said air output port and said inlet sequentially, and thereby degree of opening between said valve plug and said air inlet is adapted to being adjusted by controlling magnitude of said magnetic repulsion force generated by said electromagnetic device.

2. The flow adjusting valve for combustion gas as in claim **1**, wherein said air intake port and said air output port are provided on an upper housing, said upper housing is provided between said air intake port and said air output port with an engaging port to engage with a lower housing, said air chamber is provided on said lower housing and extends through the latter, in order that said inlet is on a top of said lower housing, said air tight elastic diagram is on a bottom of said lower housing.

3. The flow adjusting valve for combustion gas as in claim **1**, wherein said air intake port is provided on an upper housing, said upper housing is provided with an engaging port to engage with a lower housing, said air chamber is provided on said lower housing and extends through the latter, in order that said inlet is on a top of said lower housing, said air tight elastic diagram is on a bottom of said lower housing, and said air output port is provided on said lower housing to communicate with said air chamber.

4. The flow adjusting valve for combustion gas as in claim **3**, wherein said upper housing is further provided with a serially connecting port in communication with said air intake port, to be used to serially connect a combustion gas inlet of another flow adjusting valve for combustion gas.

5. The flow adjusting valve for combustion gas as in claim **1**, wherein said valve rod further has an elastic element which pushes said valve plug to keep the latter at a position to close said inlet.

6. The flow adjusting valve for combustion gas as in claim **1**, wherein said electromagnetic device further includes an iron core and a coil wound about said iron core, said coil makes said iron core generate magnetic poles of different strengths in pursuance of the magnitudes of electric fluxes.

7. The flow adjusting valve for combustion gas as in claim **6**, wherein a bottom of said iron core is exposed to outside of said electromagnetic device for adjusting distance between said iron core from said permanent magnet.

* * * * *