May 9, 1961 J. A. GILLIGAN ET AL 2,983,344

METAL WINDOW

Filed Aug. 6, 1959

FIG. 2

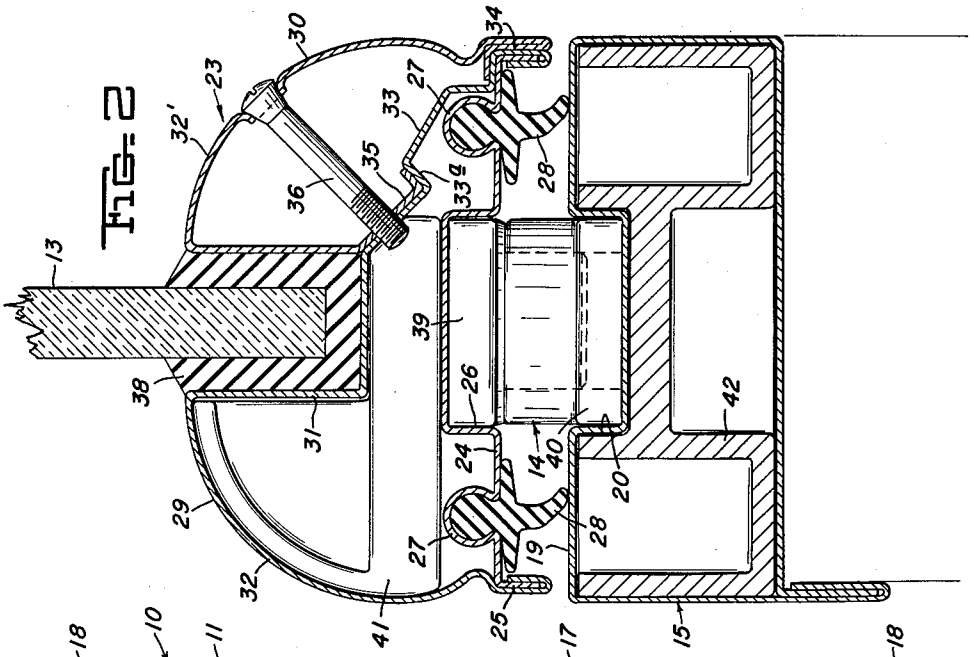

FIG. 1

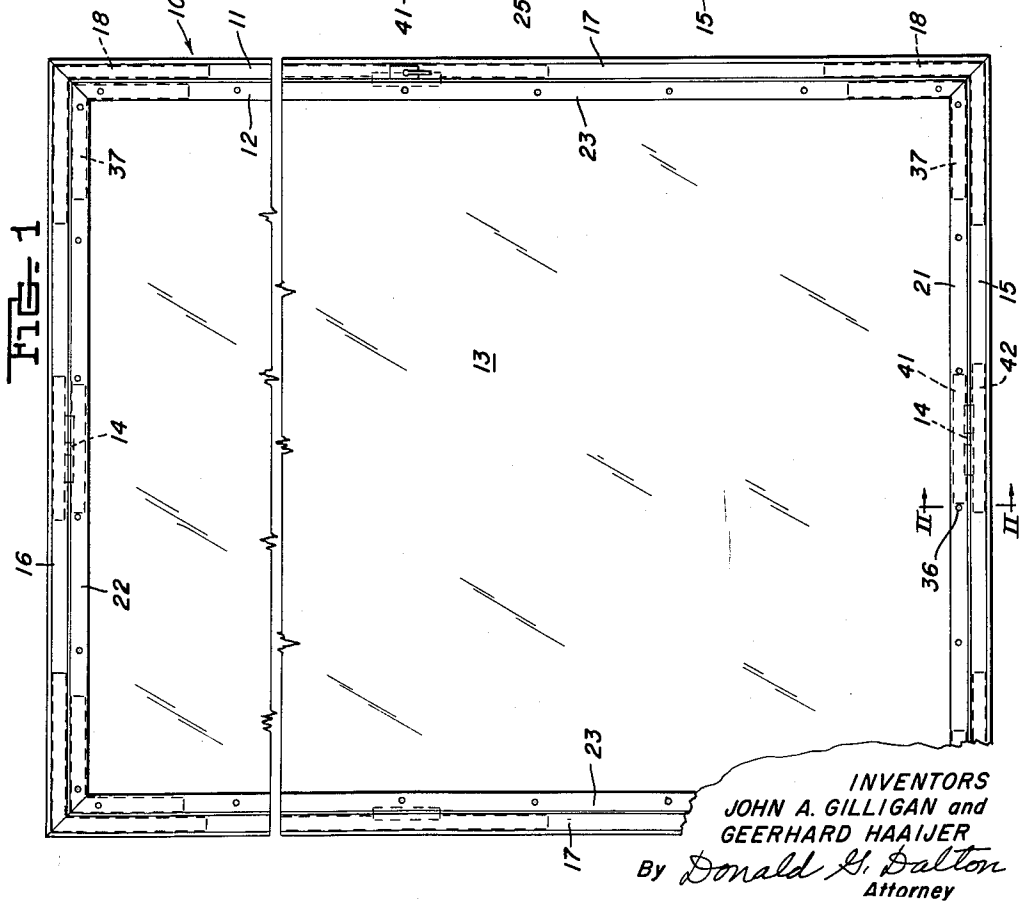

INVENTORS
JOHN A. GILLIGAN and
GEERHARD HAAIJER
By Donald G. Dalton
Attorney

United States Patent Office

2,983,344

Patented May 9, 1961

2,983,344

METAL WINDOW

John A. Gilligan, Mount Lebanon Township, Allegheny County, and Geerhard Haaijer, Wilkins Township, Allegheny County, Pa., assignors to United States Steel Corporation, a corporation of New Jersey

Filed Aug. 6, 1959, Ser. No. 832,014

1 Claim. (Cl. 189—78)

This invention relates to a metal window and, in particular to a window the sash and frame of which are composed of tubular rails formed up from sheet metal.

The object of our invention is to provide a window of the type described which can be made of material of lighter gage than it has heretofore been possible to use, thereby reducing the cost and weight of the window, yet at the same time maintaining the strength and rigidity of the completed structure necessary to withstand service loads with a reasonable safety factor.

Windows having sash and frame composed of tubular rails formed from sheet metal have been known heretofore but the rails were of generally rectangular section shaped to simulate solid wood members and were welded at the corner joints. They accordingly had to be made of relatively heavy-gage material and required special finishing to remove the visible evidence of the welds. We have invented a window including a sash composed of tubular rails of novel section which can be made of relatively thin gage sheet and still exhibit adequate strength and rigidity for any normal application. We connect the rails at the corner joints by inserted brackets mechanically secured thereto.

A complete understanding of the invention may be obtained from the following detailed description and explanation which refer to the accompanying drawings illustrating the present preferred embodiment. In the drawings:

Figure 1 is an elevation of our improved window, including frame and sash; and

Figure 2 is a partial section taken along the plane of line II—II of Figure 1.

Referring now in detail to the drawings, the window **10** of our invention comprises a rectangular frame **11** and a rectangular sash **12** positioned therein carrying a pane **13**. The sash may be fixed or pivoted, projected or hopper type. In the illustrated embodiment it is pivoted on a vertical axis by trunnions **14**. The frame **11** is composed of four rails, a sill **15**, a transom **16** and stiles **17**, all tubular and rectangular in section as shown in Figure 2, formed by bending flat sheet metal, e.g., stainless-steel sheet. The rails are joined at the corners by angle brackets **18** fitting snugly therein and secured thereto by a suitable adhesive such as an epoxy resin. The inner face of the frame rails has spaced flats **19** with a channel **20** recessed between them to accommodate the bearings for trunnions **14**.

Sash **12** is composed of four rails, bottom, top and side, designated **21**, **22** and **23**, respectively. These rails are tubular in section and formed by bending up flat sheet metal such as stainless-steel sheet. Each rail comprises a generally flat web or outer strip **24** having its edges flanged outwardly as at **25** and an inwardly recessed central longitudinal channel **26**. Between the flanges and channel, strip **24** is deformed to provide longitudinal grooves **27**. Sealing gaskets **28** extruded from rubber-like material are seated in grooves **27** and each has a web or fin that wipes surfaces **19** of the frame rail to close

the joint between sash and frame. Blocks **39** on which trunnions **14** are formed are seated in channels **26** and the trunnions are journaled in similar blocks **40** seated in channels **20**. Back-up blocks **41** and **42** are located in the sash and frame rails opposite blocks **39** and **40**.

The remainder of the sash rails is constituted by a pane-seating member **29** and a keeper member **30**, together forming an arch springing from the edges of strip **24** with a central channel **31**. One edge of member **29** is lock-seamed to one of the flanges **25** and extends inwardly on a smooth curve as at **32**. The member **29** also includes one side and the bottom of channel **31**. Thence, the metal sheet of which the member is formed extends obliquely as at **33** to the other edge of strip **24** and is lock-seamed thereto. Intermediate the bottom of channel **31** and flange **25**, the metal forming member **29** is offset to afford a ledge **33***a*.

Keeper member **30** has its outer edge shaped as at **34** to fit over the lock-seam uniting strip **24** and oblique portion **33** of member **29**. Thence member **30** extends inwardly on a smooth curve designated **32'** and is bent outwardly to form the other side wall of channel **31**. An inner edge of flange **35** on keeper member **30** bears flatwise against oblique portion **33** of member **29** and seats against ledge **33***a* thereof. The keeper members are removably secured to the pane-seating members by screws **36**. Sash rails **21**, **22** and **23** are connected at the corners of the sash by angle brackets **37** fitting snugly in the pane-seating members and secured thereto by an epoxy-resin adhesive.

The glass pane **13** has its edges provided with a cushioning and sealing channel **38** of rubber-like material and is installed in the pane-seating members of the sash by removing the keeper members. Replacement of the latter after setting the glass constitutes the whole a strong, weather-tight and rigid structure. The frame **11** may be set in a wall opening prepared therefor and fixed therein in the known manner with calking as necessary to seal the joints between the frame and wall.

Our construction makes possible a window having a stiffness ratio which, when the window is supported at the midpoints of its four sides, affords maximum resistance to wind load and minimum deflection thereunder at the corners. This ratio may be defined as EI/LD where:

E=modulus of elasticity of the material of which the sash rails are made;

I=moment of inertia of the combination of sash members **24** and **29**; the moment of inertia being taken about an axis passing through the centroid of the combination of sash members **24** and **29**, the axis being perpendicular to the plane forming the bottom of channel **31**.

L=height or width of window, whichever is greater;

$D=E_g t^3/12(1-\mu^2)$=plate-bending stiffness of pane of glass;

E_g=modulus of elasticity of glass;

t=thickness of pane of glass; and

μ=Poisson's ratio for glass.

For best results, EI/LD should be between 1 and 3. In a typical construction, viz., a window six feet high having sash rails about 1" x 2" and glass pane ¼" thick, the value of this ratio is about 2.0.

The advantage of our invention is that it permits windows to be made of lighter sheet (e.g., .025" thick) and yet retain adequate strength and rigidity. Thus, we realize a substantial reduction in both the weight and cost of a metal window as compared with those known heretofore.

While the window of our invention has been disclosed as having a fully reversible, vertically pivoted sash, the same principle may be applied to windows having fixed

sash and projected or hopper sash. In any case, the sash may be double-glazed as well as of the single-glazed type shown.

Although we have disclosed herein the preferred embodiment of our invention, we intend to cover as well any change or modification therein which may be made without departing from the spirit and scope of the invention.

We claim:

A window sash composed of tubular rails formed from sheet metal, each rail comprising an outer generally flat strip having outwardly turned flanges at its edges, a pane-seating member inwardly of said strip and cooperating therewith having its edges lock-seamed to said flanges and a keeper member secured to said pane-seating member, said pane-seating member and keeper member

both including arch segments springing from said flanges and terminating in outward flanges which together define a pane-receiving channel therebetween, said pane-seating member also having a bearing surface engaged by said keeper member and said keeper member having a flange at its outer edge engaging the adjacent joint between said strip and said pane-seating member.

References Cited in the file of this patent

UNITED STATES PATENTS

977,415	Matthews	Nov. 29, 1910
1,170,917	Lund	Feb. 8, 1916
2,733,788	Farmer	Feb. 7, 1956
2,811,754	Toth	Nov. 5, 1957
2,812,557	Hauck	Nov. 12, 1957