Nov. 30, 1948. G. A. GOTTI ET AL 2,455,302

EXTENSION CLASP FOR BANDS SUCH AS BRACELETS

Filed Dec. 16, 1947

Fig.1.

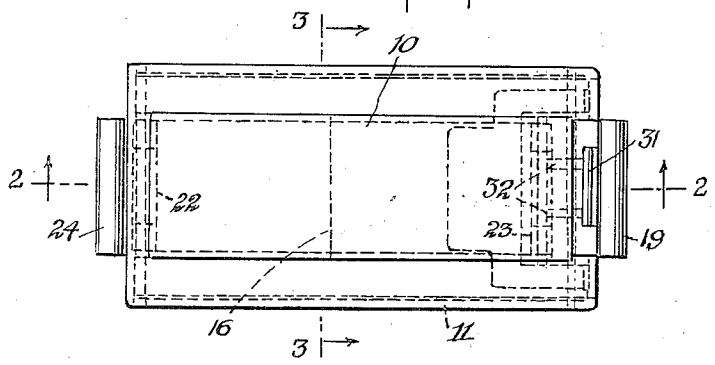

Fig.2.

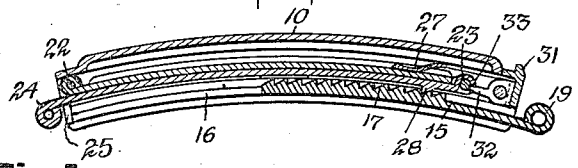

Fig.3.

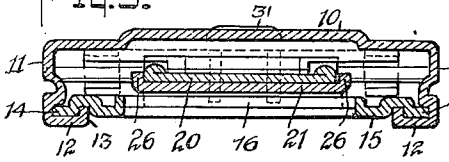

Fig.4.

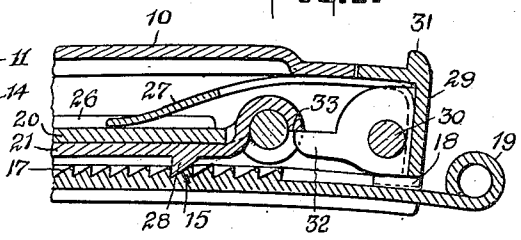

Fig.5.

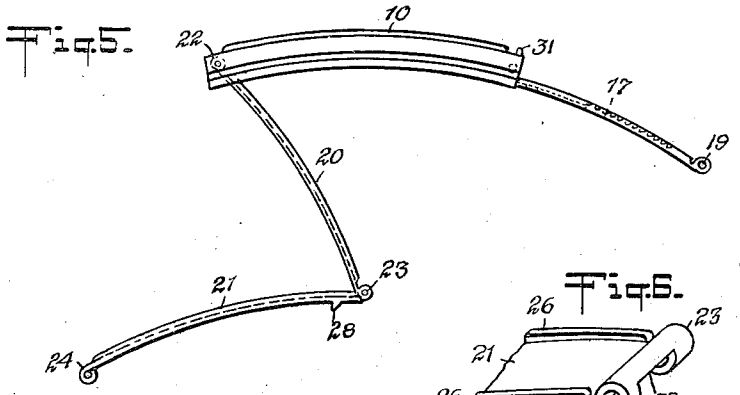

Fig.8.

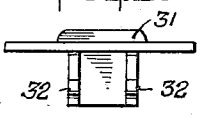

Fig.6.

Fig.7.

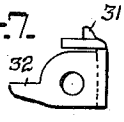

INVENTORS
George A. Gotti
Andrew Killian
and Nicholas Volpicelli
BY Munn, Liddy & Glascum
ATTORNEYS

Patented Nov. 30, 1948

2,455,302

UNITED STATES PATENT OFFICE

2,455,302

EXTENSION CLASP FOR BANDS SUCH AS BRACELETS

George A. Gotti, New York, Andrew Killian, Elmhurst, and Nicholas Volpicelli, Astoria, N. Y.

Application December 16, 1947, Serial No. 792,074

4 Claims. (Cl. 24—71)

1

The main object of this invention is to provide a simple, efficient, strong, durable device and capable of being economically manufactured.

A further object is to provide such a device as can be operated without any special knowledge and within a matter of a few seconds.

A still further object is to provide such a device as can be quickly applied and adjusted to the body member to the exact degree of snugness desired by the wearer.

Further and more specific objects, features and advantages will more clearly appear from a consideration of the detailed specification hereinafter set forth, especially when taken in connection with the accompanying drawings which illustrate a present preferred form which the invention may assume and which form part of the specification.

In brief and general terms, the invention comprises a clasp housing having an open bottom and in which a plurality of extension connector elements are pivoted to each other and thereto and adapted to be swung out to expand the normal length of the band to which they are connected. A rack element is slidable along the bottom of the casing below the housed connector elements, and its teeth are adapted in the usual manner to engage a tooth on one of said connector elements, whereby the rack element can be advanced along the housing to any desired degree, the free end of said rack element being connected to one end of the body member-encircling band. Manipulatable means are provided on the housing to disengage the tooth from the rack when desired, whereby the rack may be pulled out a sufficient distance to allow the connector elements to swing out of the housing and thereby expand the normal length of the band. Means are also provided to afford resilient pressure to hold the tooth and the rack teeth together when the connectors are housed within the casing.

A present preferred form which the invention may assume is shown in the drawings of which:

Fig. 1 is a plan view of the extension device;

Fig. 2 is a vertical longitudinal section thereof on line 2—2 of Fig. 1;

Fig. 3 is a vertical cross section thereof on lines 3—3 of Fig. 1;

Fig. 4 is an enlarged vertical longitudinal section of the end of the device;

Fig. 5 is a side elevation of the device with the extension elements or connectors removed from the housing;

Fig. 6 is a perspective view of an end of one of the connectors;

2

Fig. 7 is a side elevation of a latch member; and

Fig. 8 is a front elevation thereof.

Referring now merely to the specific form of the invention shown in the drawings, it is to be observed that there is provided a casing or housing 10 having an open bottom, and dependent side walls 11 with inwardly turned flanges 12, the ends of these flanges are turned upwardly at 13 to provide a track.

In these tracks are slidably received the outer edges 14 of a rack plate 15, the forward portion of which is cut away as shown at 16 and the rear portion of which on its upper surface is provided with rack teeth 17. The rack plate at one end thereof extends through on opening 18 in the casing 10 and has a turned over end 19 adapted to be connected to an adjacent link of a bracelet or other flexible band.

Adapted to be disposed and housed within the casing 10 are a pair of extension connector elements 20 and 21. The connector 20 is suitably pivoted within the housing at 22 and is suitably pivoted at its other end 23 to one end of the other connector 21. The opposite end of the connector 21 is provided with a turned-over end 24, whereby it may be connected to an adjacent link of the flexible band. As shown in Fig. 2, this end of the connector 21 extends through a slot or opening 25 in the housing 10, whereby such connection to an adjacent link may be made even while the connectors 20 and 21 may be disposed within the housing as shown in Fig. 2.

With a given bracelet or band, the normal disposition of the connectors 20 and 21 is for them to be folded together within the housing 10 as shown in Figs. 2 and 4, when the band is disposed around the arm or wrist or other portion of the body. It will be seen in Fig. 6 that the connector 21 is slightly wider than the connector 20 and has lateral flanges 26 so as to snugly receive and laterally embrace the connector 20 when these connectors are folded together. This construction permits the parts to be held in definite position without any loose play. When the parts are housed within the casing 10, there is a spring element 27 fastened at one end to the end of the casing 10 with the other end bearing against the top of connector 20 as shown in Fig. 4. The lower surface of the connector 21 is provided with a rack tooth 28 adapted under the impulsion of spring 27 to be kept in engagement with one or another of the rack teeth 17. As is usual with the operation of racks, teeth 17 and the tooth 28 are so constructed that the rack plate 15 can be

manually moved into the housing along the bottom thereof, but cannot be moved in the opposite direction until the folded connectors are lifted to disengage the tooth **28** from the rack teeth **17**. This will insure that when the rack plate has been moved any desired distance, this position will be maintained until the teeth are definitely disengage:

To provide for this disengagement, the right end of the casing shown in Fig. 4 and numbered **29** is pivotally mounted on a shaft **30** and is constructed as a part separate from the casing but forming, when in position, a continuation thereof. The top of this pivoted portion of the casing is provided with an upwardly extending lip **31** which can be engaged by the finger to pivot this portion. This pivoted portion of the casing is provided with forwardly extending fingers **32** which are normally adapted to extend under a shoulder **33** suitably formed in the turned-over end of the connector **21**. I will be apparent that when the finger engages the lip **31** to move it to the right, as shown in Fig. 4, the fingers **32** will be elevated and carry with them the folded connectors **20** and **21** lifting them against the resistance of spring **27**, whereby the tooth **28** is disengaged from the teeth **17** so that the rack plate can be drawn out as shown in Fig. 5, whereby the folded connectors can be swung down through the open slot in the front end of this rack plate to the position shown in Fig. 5 or further and thereby provide a greater length of band. When the connectors are folded within the casing, it is also to be noted that the degree to which the rack plate is pushed into the housing may well determine the tightness with which the band encircles the body member, since this plate is connected to an adjacent link of the band.

The purpose of displacing the connectors **20** and **21** from the housing is to temporarily greatly expand the length of the band so that it can be easily removed from or disposed on a wrist or other body member which it is to encircle. After the band is disposed thereon, then the links are folded and moved back into the housing and the rack plate is moved as far into the housing as is necessary to cause the band to properly and snugly embrace the body member. This adjustment of the rack plate can be made very finely by reason of the engagement of the tooth **28** with any one of the teeth **17** on the rack plate. A mere flip of the finger on the lip **31** will permit the rack plate to be moved back a sufficient distance to permit the removal of the connectors out of the housing. In the movement of the folded connectors back into the housing, it is clear that the turned-over end of the connector **21** on which the shoulder **33** is formed will slip past the fingers **32** which are resiliently mounted and will then snap under the shoulders as shown in Fig. 4. The spring **27** will maintain the parts in engaged position until the disengagement thereof is positively effected by the lifting of the fingers **32** in the manner above described.

It is therefore obvious that the device is compact, durable, strong and composed of a minimum number of simple parts which definitely cooperate to permit the removal of the device from a body member with ease and the attachment of said device to said member with equal dispatch and the final adjustment of the device on the body member with any desired degree of snugness.

While the invention has been described in detail and shown with respect to the accompanying drawing, it is not to be limited to such details, since many changes and modifications may be made in the invention without departing from the spirit and scope thereof. Hence, it is desired to cover any and all forms and modifications of the invention which may come within the language and scope of any one or more of the appended claims.

We claim:

1. In a device of the class described, a housing having an open bottom, a plurality of interpivoted connector elements adapted to be disposed in said housing in folded condition, one end of said plurality pivoted to the housing, the other end projecting from the housing, a tooth on the last of said elements, a plate slidable along the bottom of the housing having rack teeth on its upper surface adapted to engage said tooth and uni-directionally latching the plate against withdrawal from the housing, the end of the plate always extending beyond the housing, spring means on the housing bearing against the plurality of elements to maintain engagement of the tooth with the rack and manipulatable means adapted when operated to move said elements to disengage said tooth and permit withdrawal of the rack.

2. In a device of the class described, a housing having an open bottom, a plurality of interpivoted connector elements adapted to be disposed in said housing in folded condition, one end of said plurality pivoted to the housing, the other end projecting from the housing, a tooth on the last of said elements, a plate slidable along the bottom of the housing having rack teeth on its upper surface adapted to engage said tooth and uni-directionally latching the plate against withdrawal from the housing, the end of the plate always extending beyond the housing, spring means on the housing bearing against the plurality of elements to maintain engagement of the tooth with said rack, a portion of said housing forming a continuation thereof but being separately pivoted, a lip on said separate portion to be engaged by the finger of the operator, and fingers on said pivoted portion in contact with part of said plurality of elements, whereby the movement of said pivoted portion will cause the elements to be moved to disengage the tooth.

3. In a device of the class described, a housing having an open bottom, a plurality of foldable connector elements to be disposed therein, a slide plate adapted to be moved along the bottom of the housing to enclose said elements, the forward portion of said slide plate being cut away to permit movement of said elements out of the housing when the plate is withdrawn a predetermined amount, said plate having rack teeth thereon and a tooth on the adjacent element engageable with the rack teeth, spring means pressing against the elements to hold the tooth in engagement and manipulatable means to displace said elements and disengage said tooth.

4. In a device of the class described, a housing having an open bottom, a plurality of inter-pivoted connector elements adapted to be disposed in said housing in folded condition, one end of said plurality pivoted to the housing, the other end projecting from the housing, a tooth on one of said elements, a plate slidable along the bottom of the housing having rack teeth on its upper surface adapted to engage said tooth and unidirectionally latching the plate against withdrawal from the housing, the end of the plate always extending beyond the housing, spring means on the housing bearing against the plu-

rality of elements to maintain engagement of the tooth with the rack and manipulatable means adapted when operated to move said elements to disengage said tooth and permit withdrawal of the rack.

GEORGE A. GOTTI.
ANDREW KILLIAN.
NICHOLAS VOLPICELLI.

REFERENCES CITED

The following references are of record in the file of this patent:

UNITED STATES PATENTS

Number	Name	Date
1,785,059	Weisman	Dec. 16, 1930
1,966,063	Domler	July 10, 1934
2,065,581	Heileman	Dec. 29, 1936
2,145,680	Bennett	Jan. 31, 1939
2,150,872	Nelson	Mar. 14, 1939
2,159,079	Goulden	May 23, 1939
2,190,878	Lundman	Feb. 20, 1940