(No Model.)

C. F. T. KANDELER.

FIREPROOF FLOOR CONSTRUCTION.

No. 559,081. Patented Apr. 28, 1896.

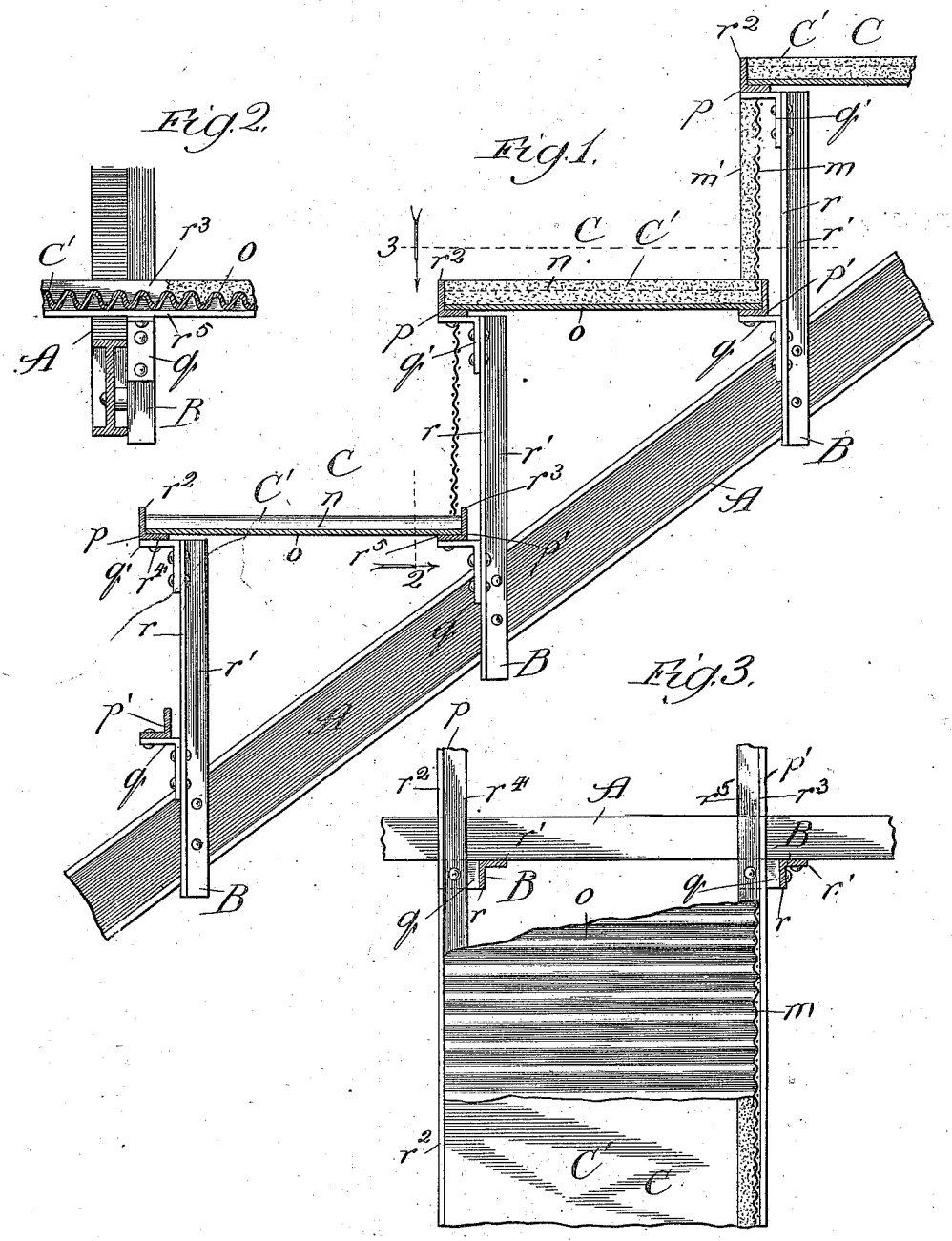

Witnesses:
Chas. E. Gaylord,
Lute J. Alter.

Inventor:
Charles F. T. Kandeler,
By Dyrenforth and Dyrenforth,
Att'ys.

UNITED STATES PATENT OFFICE.

CHARLES F. T. KANDELER, OF CHICAGO, ILLINOIS.

FIREPROOF FLOOR CONSTRUCTION.

SPECIFICATION forming part of Letters Patent No. 559,081, dated April 28, 1896.

Application filed March 3, 1896. Serial No. 581,636. (No model.)

To all whom it may concern:

Be it known that I, CHARLES F. T. KANDELER, a citizen of the United States, residing at Chicago, in the county of Cook and State of Illinois, have invented a new and useful Improvement in Fireproof Floor Construction, of which the following is a specification.

My invention relates to an improved construction of tiered floors, such as are provided in auditoriums, particularly those (including the galleries) of theaters; and my object is to render such floors of light, but strong and durable, structure and thoroughly fireproof.

Referring to the accompanying drawings, Figure 1 is a broken sectional view, the section being taken lengthwise of the floor-beams, showing my improved construction as used in the main or gallery floor of a theater; Fig. 2, a broken section taken at the line 2 on Fig. 1 and viewed in the direction of the arrrow, and Fig. 3 a broken section taken at the line 3 on Fig. 1 and viewed in the direction of the arrow.

A denotes one of the floor-beams (I-beams being the preferred form used,) which are provided at suitable invervals in desired number, and placed in proper relative position to incline downward toward the front of the auditorium. At suitable intervals upon each beam A are fastened in upright position the posts B, (shown in their preferred form of angle-irons,) bolted or riveted through one side r' to a side of the beam to present the other side r flatwise to the front. Each post B has fastened to its front side r two angle-brackets q and q', the position of the former being adjacent to the upper edge of the inclined beam A, and that of the latter being at the upper end of the post, and their relative positions being such (the posts B should all be of equal or substantially equal length) that the bracket q' on one post will be on the same horizontal plane with the bracket q immediately behind it. The forwardly-projecting portions of each row of brackets q' afford seats to which are fastened, as by means of bolts, the angle-irons p in a manner to present their sides r^2 forward in vertical position, and the forward projecting portions of each row of brackets q afford seats to which are fastened, as by means of bolts, the angle-irons p' in a manner to present their sides r^3 rearward in vertical position. The lower sides r^4 and r^5 of the pairs of angle-irons p p' thus afford bearings for the floor C′ of each tier C, which floor is composed of a base o, formed preferably of corrugated sheet metal and a filling n thereon of concrete or analogous material, which should extend flush with the upper edges of the sides r^2 r^3 of the opposing angle-irons p and p', and whereby the sides r^2 of the former afford a binding for protection, along the forward edges of the tier, to the concrete. At the back of each tier C is extended, across the posts B and between the base of the horizontal side of each bracket q' to the floor C′, expanded metal or wire-cloth backing m, upon which a covering m', of concrete or analogous material, is applied, preferably of a thickness to cause it to extend flush with the forward edges of the horizontal portions of the brackets q'.

What I claim as new, and desire to secure by Letters Patent, is—

1. In a fireproof tiered-floor construction, the combination of the inclined floor-beams having posts fastened to them at intervals, said posts carrying upper and lower seats connecting the posts crosswise of the beams, fireproof floors on said seats and fireproof backs extending between the tiers, substantially as described.

2. In a fireproof tiered-floor construction, the combination of the inclined floor-beams having posts fastened to them at intervals, angle-irons p connecting the posts at their upper ends crosswise of the beams, angle-irons p' similarly connecting said posts below their upper ends, fireproof floors on said angle-irons and fireproof beams between the tiers, substantially as described.

3. In a fireproof floor construction, the combination of the inclined floor-beams having posts fastened to them at intervals, brackets fastened to each post, to extend forward thereon, one near the floor-beams and one near the upper end of the post, fireproof floors supported in tiers on said brackets, and fireproof backs extending between the tiers, substantially as described.

4. In a fireproof tiered-floor construction, the combination of the inclined floor-beams having posts fastened to them at intervals, brackets q and q' fastened to each post, to ex-

tend forward thereon, respectively near the floor-beam and near the upper end of the post, angle-irons p connecting the brackets q', angle-irons p' connecting the brackets q, fireproof floors supported on said angle-irons and fireproof backs extending between the tiers, substantially as described.

5. In a fireproof tiered-floor construction, the combination of the inclined floor-beams, having angle-iron posts fastened to them at intervals, brackets q and q' fastened to each post to extend forward thereon, respectively near the floor-beams and near the upper end of the post, angle-irons p connecting the brackets q', angle-irons p' connecting the brackets q, fireproof floors C' supported on said angle-irons and each comprising a corrugated metal base o and a filling n of concrete, or the like, thereon, and fireproof backs extending between the tiers, substantially as described.

6. The fireproof tiered-floor construction comprising, in combination, inclined floor-beams A having angle-iron posts B fastened to them at intervals, brackets q and q' fastened to each post to extend forward thereon, respectively near the floor-beams and near the upper end of the post, angle-irons p connecting the brackets q', angle-irons p' connecting the brackets q, fireproof floors C' supported on said angle-irons and each comprising a metal base and a filling n of concrete, or the like, thereon, and fireproof backs extending between the tiers and each comprising a perforated metal backing m and a covering m' of concrete, or the like, substantially as described.

CHARLES F. T. KANDELER.

In presence of—

J. H. LEE,

RICHARD SPENCER.