March 14, 1939. F. COZZOLI 2,150,760

AMPOULE FILLER

Filed Jan. 28, 1938 3 Sheets-Sheet 1

Fig. 1.

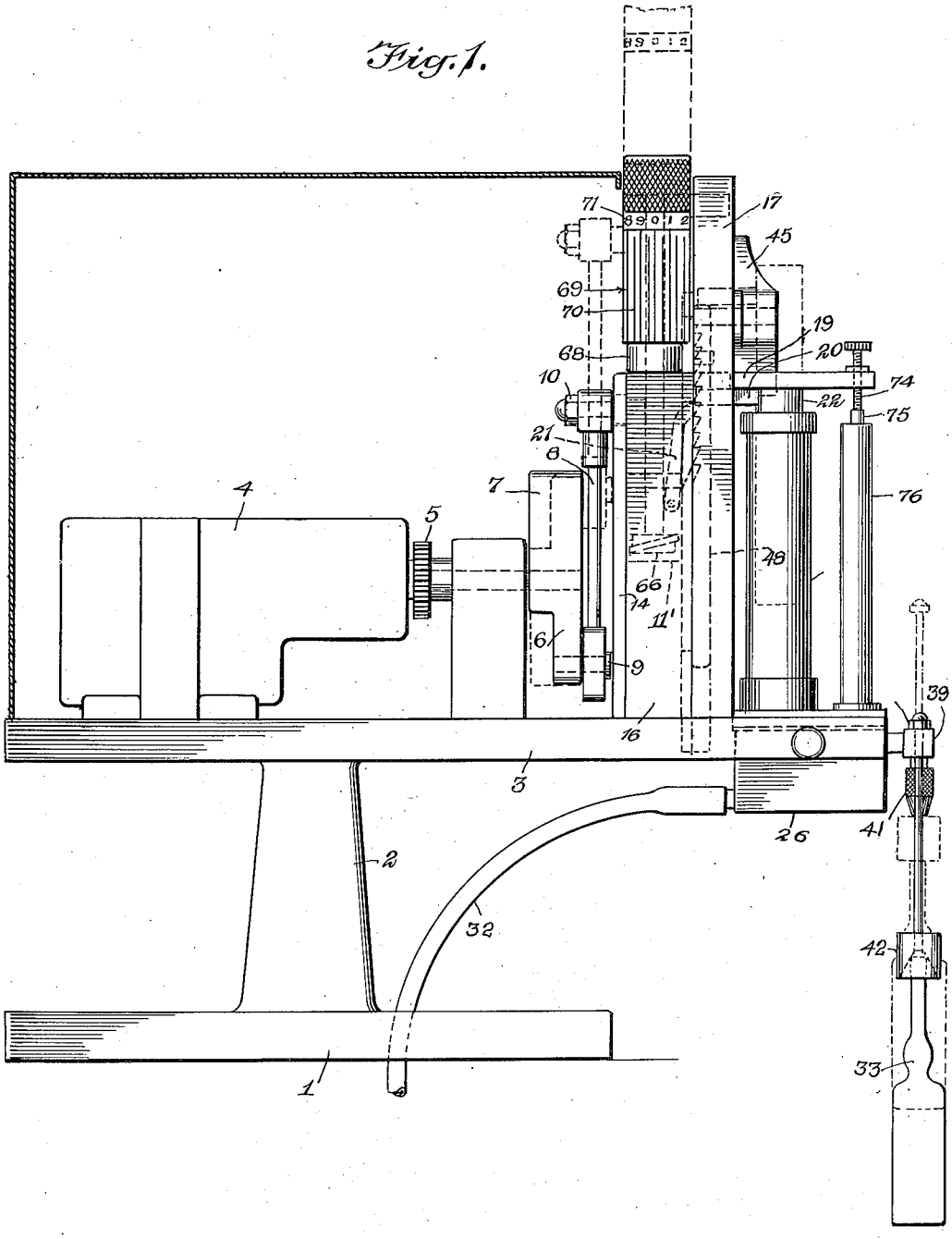

WITNESSES

George Naylor

A. L. Ritchie

INVENTOR

Frank Cozzoli

BY

Munn Anderson & Liddy

ATTORNEYS

March 14, 1939. F. COZZOLI 2,150,760

AMPOULE FILLER

Filed Jan. 28, 1938 3 Sheets-Sheet 2

Fig. 2.

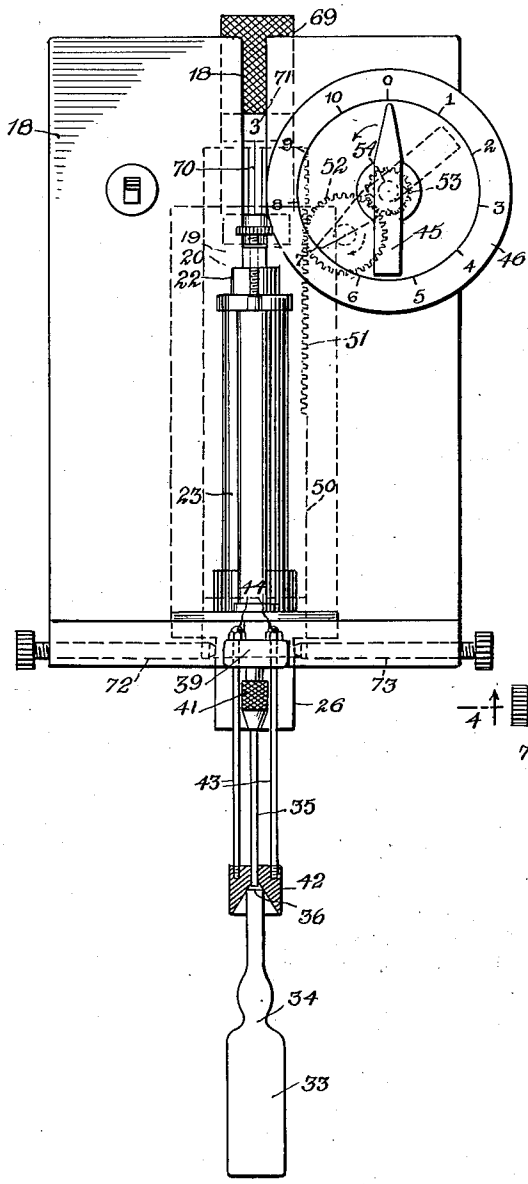

Fig. 4.

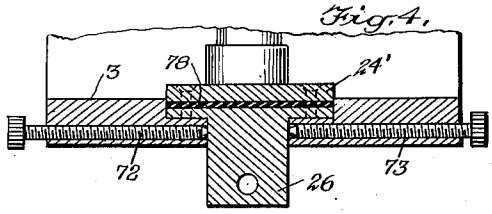

Fig. 3.

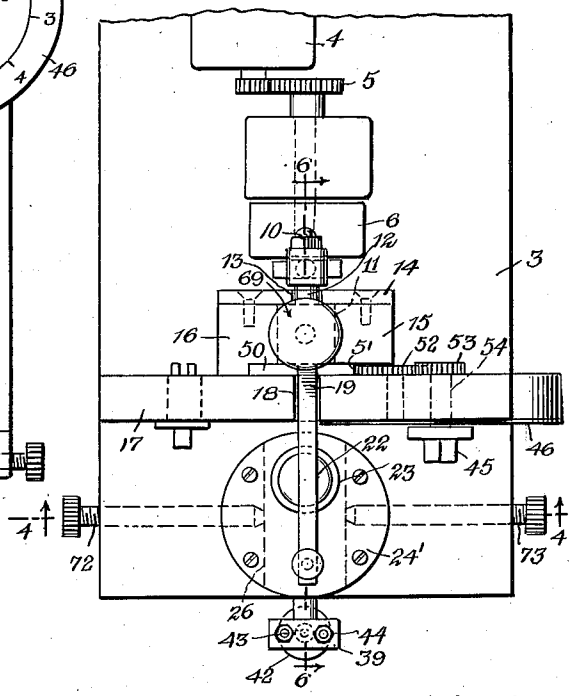

Fig. 5.

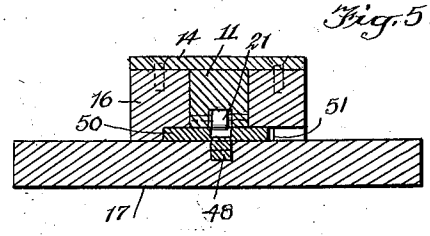

WITNESSES

George Taylor

A. L. Kitchin

INVENTOR

Frank Cozzoli

BY

Munn Anderson & Liddy

ATTORNEYS

March 14, 1939. F. COZZOLI 2,150,760

AMPOULE FILLER

Filed Jan. 28, 1938 3 Sheets-Sheet 3

Fig. 6.

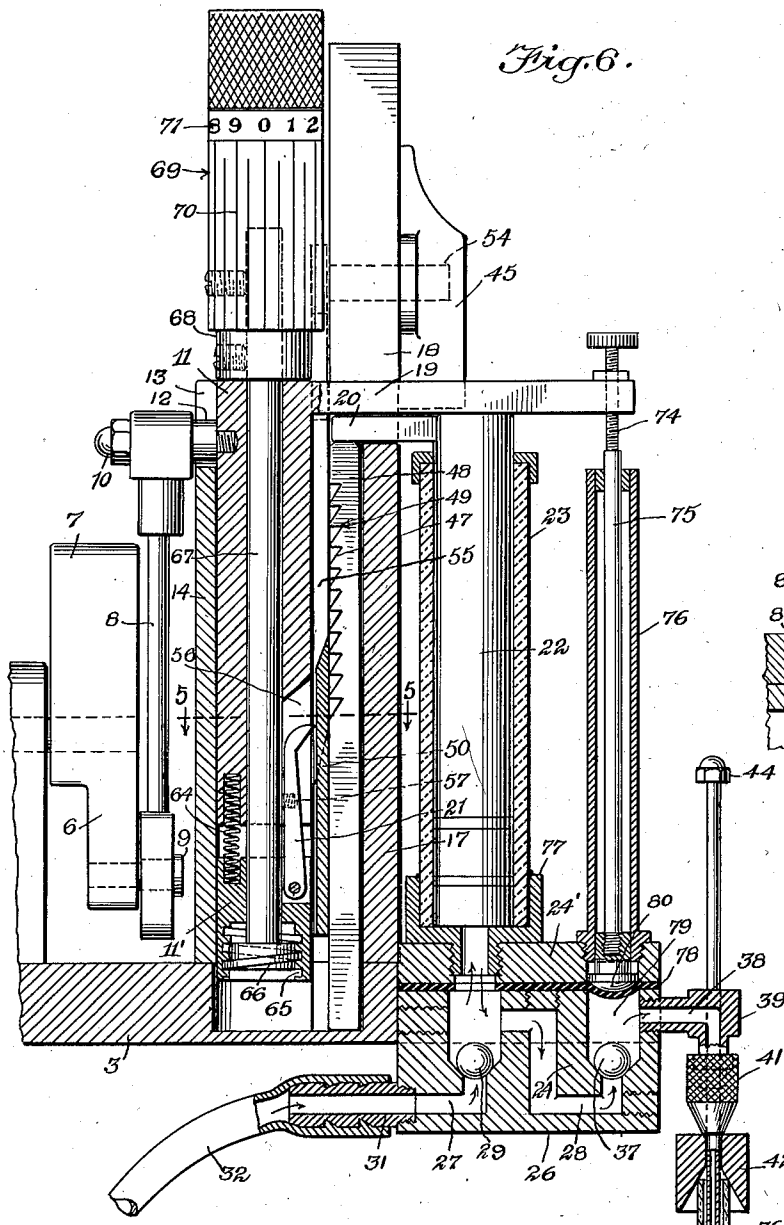

Fig. 7.

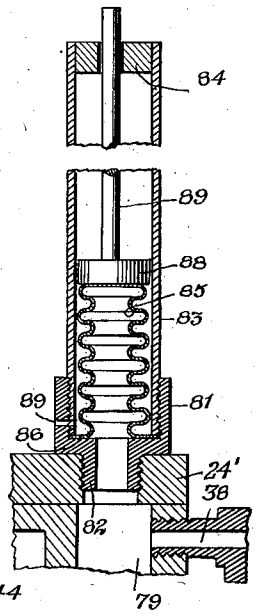

WITNESSES

G. L. Kitchin

INVENTOR

Frank Cozzoli

BY

Anderson & Liddy

ATTORNEYS

Patented Mar. 14, 1939 2,150,760

UNITED STATES PATENT OFFICE

2,150,760

AMPOULE FILLER

Frank Cozzoli, Plainfield, N. J.

Application January 28, 1938, Serial No. 187,361

9 Claims. (Cl. 226—107)

This invention relates to a filling device for containers and particularly to an improved device for filling ampoules with a medicine or other liquids, the object being to provide a construction which will continuously function and at the same time accurately fill the ampoule.

Another object of the invention is to provide an improved filling device for ampoules wherein the last drop from the filling tube is drawn back as soon as the liquid stops flowing.

A further object of the invention is to provide a filling device for ampoules wherein an exact number of units of liquid may be discharged into an ampoule or an exact number of units and a fraction of a unit.

In the accompanying drawings:

Fig. 1 is a side elevation of an ampoule filler disclosing an embodiment of the invention;

Fig. 2 is a front view of the structure shown in Fig. 1, the ampoule receiving cap being shown in section;

Fig. 3 is a top plan view of the principal parts of the structure shown in Fig. 1, the casing being removed;

Fig. 4 is a fragmentary sectional view through Fig. 3 on the line 4—4;

Fig. 5 is a fragmentary sectional view through Fig. 6 on the line 5—5;

Fig. 6 is a sectional view through Fig. 3 approximately on the line 6—6;

Fig. 7 is a fragmentary longitudinal vertical section showing a modified form of suction device.

Referring to the accompanying drawings by numerals, 1 indicates a base having an upstanding standard 2 carrying a base plate 3 on which the various parts of the instrument are mounted. A prime mover, as for instance an electric motor 4, is carried by the base plate 3 and through a train of gears 5 rotates the crank 6 which has a suitable counterweight 7 to produce a smooth action. A pitman 8 is journaled on the wrist pin 9 and on a pin 10 threaded into the vertically movable member 11 as shown in Fig. 6. A suitable spacing sleeve 12 surrounds the pin 10 and fits into a suitable notch 13 in the face plate 14 when the parts are in their lowest position as shown in Fig. 6. The plate 14 is secured by suitable screws to the uprights 15 and 16 as shown in Fig. 3, which uprights may be welded or otherwise rigidly secured to the base plate 3. An upright wall 17 is also secured by welding or otherwise to base plate 3 and is provided with a notch 18 in which the respective abutments 19 and 20 travel when the device is in use. It will be noted that abutment 19 is welded or otherwise rigidly secured to reciprocating member 11 while the abutment is welded or otherwise secured to piston 22.

By reason of the construction just described, whenever motor 4 is operating the vertical reciprocating member 11 will move upwardly and downwardly and will carry with it the abutment 19 as well as the pawl 21. These parts are arranged so as to properly cause the plunger 22 of the pump 23 to reciprocate as hereinafter fully described. The pump 23 is screwed or otherwise rigidly secured to a removable fitting or block 24 which is round on the top as shown in Fig. 3, but as shown in Fig. 4 is provided with a depending rectangular extension 26 projecting below the base plate 3. The block or fitting 24 is provided with passageways 27 and 28, passageway 27 being provided with a check valve 29 which will permit liquid to flow into the pump 23 but not back into passageway 27.

The weight of the ball 29 and also its size act to prevent it entering the pump on the suction stroke. A tubular fitting 31 is screwed into the block 24 and opens into passageway 27, said fitting carrying a supply tube 32 which may be connected with any suitable reservoir of liquid to be used in filling the ampoule 33. It will be understood that the ampoule 33 is of usual construction and when it is to be used may be broken off at the restricted zone 34. Also it will be understood that after the desired quantity of liquid has been inserted into the ampoule the filling tube 35 is removed and the upper end 36 of the ampoule is closed by being melted or fused. It will also be understood that this bottle is made of glass, although as far as the present invention is concerned it could be made of other material.

It will be seen from Fig. 6 that liquid coming in through pipe 32 will pass the ball 29 and enter the pump 23. On the compression stroke which will be a downward stroke as shown in Fig. 6, the liquid will pass out through the pasageway 28 and will unseat the ball valve 38 whereby the liquid may pass through the passageway 38 in fitting 39. The weight of the ball 37 prevents it from seating itself in the inlet opening of passageway 38. A coupling of any desired kind 41 holds the tube 35 with one end in registry with the outlet end of passageway 38. It will be understood that the tube 35 is stationary but the centering device 42 is vertically movable. This centering device is supported by a pair of guide rods 43 (Fig. 2) which slidingly extend through suitable openings in fitting 39. Each of these

rods is provided with an enlargement 44 at the top so as to limit the downward movement of the parts. The centering device may be made of any desired material but preferably of a substantially rust-proof metal, as for instance Monel metal or stainless steel, although vitreous materials could be substituted, as for instance glass, without departing from the spirit of the invention. This centering device is formed with a cone-shaped socket which is smooth so that the end of the container or ampoule may surround the end of tube 35 without touching the same. When an ampoule is being filled the tube 35 projects below the line of breakage of the ampoule.

When the device is first used the cap 42 is in the position shown in Fig. 2. The ampoule is placed as shown in Fig. 2 and then is raised as far as possible whereupon the neck of the ampoule will telescope over the tube 35 as shown in Fig. 6. This will prevent any of the liquid from contacting with the top end of the neck of the ampoule. This precaution is necessary in order to properly fuse the upper end of the neck to close the same without injuring the liquid deposited in the ampoule. After the ampoule has received its desired supply of liquid it is lowered and set aside and a new ampoule provided which is raised to the position shown in Fig. 6. As the machine continues to function a second supply of liquid will be discharged and will be received by the second ampoule. This action is continuous as long as the machine is in use. In case an ampoule should not be provided in time for any return stroke of the plunger the parts will function in the regular manner and that unit or quantity of liquid will merely be discharged out through the tube 35 and lost, unless the machine was stopped shortly after the ampoule was removed.

In the medical profession ampoules are used to contain different liquids which are to be injected by a needle into a human body or an animal. In view of this fact it is essential that an exact quantity of liquid be provided for each ampoule and usually the unit of measure is the centimeter although ounces or other measures may be used, but for the purpose of this description the measure in centimeters will be used to make the invention clear. Sometimes an even number of centimeters are desired and sometimes a fraction of a centimeter is desired. The present invention is so formed that it may be adjusted to permit the pump to discharge any desired number of centimeters or any desired number of centimeters with any desired fraction of a centimeter. As shown in the accompanying drawings, particularly in Fig. 2, the thumb member 45 which also acts as a pointer is shown in dotted lines pointing at the numeral 7 on the dial 46. This would indicate that the parts are set to discharge seven centimeters. In Fig. 6 it will be seen that there are seven teeth 47 of the reciprocating bar 48 exposed. This will indicate that when the machine functions the pump will discharge seven centimeters upon each complete cycle of movement of pump 23.

Referring more particularly to Fig. 6 it will be observed that the sliding or reciprocating bar 48 is provided with a rack 49 having a number of teeth 47. The teeth are proportioned to the pump 23 so that each tooth 47 when used indicates one centimeter in volume. A sliding plate 50 is arranged between the bar 48 and the reciprocating member or power actuated member 11. This plate on one edge is provided with a rack or gear teeth 51 as shown in Fig. 2. A gear wheel 52 continually meshes with rack 51 and with a pinion 53 which is rigidly secured to the shaft 54 which is also rigidly secured to the hand or thumb member 45. It will therefore be seen that when the thumb member 45 is rotated the rack 51 will be raised or lowered and as it is integral with plate 50 said plate will be raised or lowered. Plate 50 is provided with a slot 55 at the upper part, said slot when positioned as shown in Fig. 6 exposing seven of the teeth 47. If the thumb member 45 was rotated in a certain direction so as to lower plate 50, more of the teeth would be exposed and consequently more liquid would be forced through the discharge tube 35 by pump 23. The reciprocating member 11 is provided with a suitable notch 56 in which the pawl 21 functions. This pawl is pivotally mounted and pressed by the spring 57 so as to move into the rack 49 whenever the plate 50 will permit.

When the parts are positioned as shown in Fig. 6 and the prime mover starts to function the reciprocating member 11 will move upwardly and pawl 21 will merely scrape along on one surface of plate 50 until it comes to the slot 55, whereupon it will move into engagement with the lowermost tooth that is exposed. As the member 11 continues to move upwardly power or motion will be transmitted through pawl 21 to bar 48 to move the same upwardly. This will cause the bar 48 to move the abutment 20 upwardly and consequently move the plunger 22 upwardly until the reciprocating member 11 has reached the top of its travel. The reciprocating member will then immediately begin a return stroke and will cause the abutment 19 to press against the abutment 20 to move the plunger 22 downwardly on its power or discharge stroke.

As shown in Fig. 6, the plunger has just reached its lowermost position. As the crank 6 continues to move there will begin a second upward movement of member 11 and abutment 19 but pawl 21 will not function for a while. However, when the member 11 moves downwardly it will move abutment 19 downwardly and not only force the plunger 22 downwardly but will also force downwardly the adjustable screw 74. This screw will strike the reciprocating rod 75 carried by a tubular casing 76 screwed into a superposed block 24' provided on the block 24 as shown in Fig. 6. The member 77 is screwed into the block 24' as well as the tubular casing 76. A rubber member 78 is arranged between the blocks 24 and 24'. The block 24' may be secured to the block 24 by suitable screws which clamp the sheet of rubber 78 tightly in place. The sheet of rubber extends across the opening 79 so that when the rod 75 is moved downwardly it will depress the enlarged end 80 and also depress part of the rubber sheet 78. This depression action takes place as the piston 22 moves to its lowermost position. Immediately upon the downward movement of the member 11 the adjustable screw 74 will be moved upwardly and rod 75 will be released, whereupon the resiliency of the rubber 78 will quickly move the parts upwardly until the depressed part of rubber 78 is substantially in line with the remaining part. This will cause a slight suction in the passageway 38 and consequently will draw the last drop of liquid at the end of the pipe or tube 35 upwardly into the pipe so that when the ampoule 33 is removed from the pipe 35 none of the liquid will have

come into contact therewith so that the end 36 may be properly welded by fusing.

In order to secure a fraction of a centimeter the relative vertical position of pawl 21 is shifted. To secure this result member 11 is provided with a separated bottom part 11' which has a tendency to move down under the action of the compression spring 64. The lower part of member 11' is provided with a threaded socket 65 in which is arranged a threaded member 66 carried by the shaft 67. An abutment 68 is secured to shaft 67 to limit its downward movement under the action of spring 64. Shaft 67 also has rigidly secured thereto a hand or thumb member 69 provided with graduations 70 with numbers 71 indicating the degree of division. In case the thumb member 69 was rotated until the numeral 1 was positioned where the zero is shown in Fig. 6, the member 11' would be raised a short distance or one-tenth of a centimeter. This would raise the pawl 21 a similar distance and thereby cause it to function a little sooner. If thumb member 69 was rotated in the opposite direction the pawl 21 would be lowered. The rotation of the thumb member 69 for one complete revolution equals the distance of one tooth 47. It will therefore be seen that by rotating the thumb member 69 in a desired direction seven centimeters and a fraction might be discharged or a fraction less than seven centimeters might be discharged. The same would be true in respect to any setting of the machine. For instance, if the machine was set to supply two centimeters, a suitable adjustment of thumb member 69 would permit a fraction more or a fraction less to be discharged.

Referring particularly to Fig. 4 it will be seen that the block or member 24 is held in position by suitable thumb operated screws 72 and 73. This arrangement permits the block or member 24 to be removed at any time for cleaning, sterilizing, or other purposes without disturbing the remaining parts of the mechanism. The various parts of the apparatus are preferably formed from metal except possibly the tube 23, although the barrel of the pump, block 24 and other parts could be made of vitreous material, as for instance glass.

In Fig. 7 a slightly modified form of an improved suction device is disclosed, the same being used in place of the member 76 and associated parts. As illustrated in Fig. 7, the block 24' is bolted or otherwise secured rigidly in place without the use of the rubber 78. An internally threaded sleeve 81 is provided, said sleeve having a reduced externally threaded extension 82 screwed into block 24'. A tubular member 83 of metal or other suitable material is screwed into sleeve 81 and is provided with a spider or guiding member 84 at the top. A bellows 85, preferably of metal, is arranged in the tubular member 83 with the end flange 86 clamped firmly in place by said tubular member. A vent aperture 87 may be provided if desired. However, it will be noted that the upper end of the bellows 85 is closed though the lower end is open to the chamber 79. A guiding piston 88 rests on the top of the bellows 85 and supports the rod 89 which extends through member 84 so as to be engaged by the screw 74 when this form of the invention is substituted for member 76 and associated parts. This structure is desirable because it may be readily sterilized in boiling water and will not readily deteriorate as all parts are preferably made from metal.

I claim:

1. An ampoule filler comprising a filling tube, a pump having a reciprocating piston structure for forcing liquid through said tube, means for actuating said pump, said means including a prime mover, a reciprocating member, means actuated by said prime mover for reciprocating said reciprocating member, a reciprocating bar for moving said piston structure in one direction, means actuated by said reciprocating member for moving said reciprocating bar in one direction, and means actuated by said reciprocating member for moving said piston structure and said reciprocating bar in the opposite direction.

2. An ampoule filler comprising a filling tube, a reciprocating pump for forcing liquid through said tube, a toothed reciprocating bar for moving the plunger of said pump in one direction, a pawl positioned to engage the teeth on said bar and move the bar in one direction, a reciprocating member carrying said pawl acting to move the pawl in a back and forth movement, hand actuated means for preventing said pawl to function for part of its travel, means including a prime mover for reciprocating said reciprocating member, and means actuated by said reciprocating member for moving said reciprocating toothed bar and said plunger in the opposite direction.

3. An ampoule filler including a filling tube, a pump for forcing liquid through said tube, said pump having a reciprocating plunger provided with an abutment, a power actuated reciprocating member having an abutment positioned to engage and move the first mentioned abutment and said plunger in one direction, a reciprocating bar positioned to engage and move the first mentioned abutment and said plunger in the opposite direction, said reciprocating bar having a rack, a pawl pivotally mounted on said reciprocating member positioned to engage said rack and move the pawl, said reciprocating bar and said plunger, and a hand adjustable member for causing an engagement of any desired tooth on said rack.

4. A container filler including a filling tube, a pump for forcing liquid through said tube, means including a prime mover for causing said pump to function, and a hand operated structure for varying the degree of functioning of said pump, said hand operated means including a structure for adjusting for unit volume including a toothed bar, an adjustable cover plate for covering certain of the teeth of said toothed bar, and a reciprocating pawl positioned to slide for part of its movement over said cover plate and engage a tooth of said toothed bar for the remaining part of its movement, and another structure for adjusting for a fraction of a unit volume, said other structure including a screw adjustment for adjusting the position of said pawl in respect to said toothed bar.

5. An ampoule filler including a filling tube, a pump for forcing liquid through said tube, a power actuated member for actuating said pump in one direction, a reciprocating bar for actuating said pump in the opposite direction, said bar having a rack, a pawl carried by said power actuated member, said pawl being positioned to engage and move said rack and bar when moving in one direction, a slide plate positioned to be moved between said pawl and said rack, and a hand actuated structure for moving said plate to cause said pawl to engage sooner or later said rack.

6. An ampoule filler including a filler tube,

a pump for forcing liquid through said tube, said pump having a reciprocating plunger, a power actuated member for moving said plunger in one direction, a reciprocating bar for moving said plunger in the opposite direction, a pawl carried by said power actuated member, said reciprocating bar having a rack positioned to be engaged by said pawl, a reciprocating plate adapted to slide between said rack and said pawl for causing the pawl to engage sooner or later said rack, said plate having gear teeth on one surface, a train of gears positioned with one gear in mesh with the teeth on said plate, a hand actuated pointer for actuating said train of gears, and a dial over which said pointer is adapted to move for indicating the position of the effective top edge of said plate in respect to the teeth of said rack.

7. An ampoule filler including a filling tube, a pump for forcing liquid through said tube, means including a pawl and rack for causing said pump to function, means for varying the degree of functioning of said pump, said last-mentioned means including a micrometer adjustment consisting of a threaded member for varying the position of said pawl in respect to the teeth on said rack, a rotatable shaft for actuating said threaded member and a hand actuated member connected to said shaft, said hand actuated member having graduations thereon for indicating the degree of turning of said shaft, and automatically actuating means for producing a rarefaction in the filling tube immediately after the pump has completed its power stroke to withdraw the last drop at the end of the filling tube.

8. An ampoule filler including a filling tube, a pump for drawing liquid from a supply and forcing the same through said filling tube, means for actuating said pump, said means being provided with an arm, an adjustable screw carried by said arm, and means coacting with said screw for producing a slight rarefaction in said filling tube immediately after the functioning of said pump, said last-mentioned means including a bellows having one end in free communication with said tube and a rod resting on top of said bellows and extending to a point to be engaged by said screw shortly before the completion of the power stroke of the piston whereby when the means for actuating said pump starts to cause the pump to perform its intake stroke said rod will be released and said bellows allowed to expand.

9. An ampoule filler including a filler tube, a pump for forcing a liquid through said tube, means including a pawl and rack for causing said pump to function, and means for varying the degree of functioning of said pump, said last mentioned means including a micrometer adjustment consisting of a threaded member for varying the position of said pawl in respect to the teeth on said rack, a rotatable shaft for actuating said threaded member, and a hand actuated member connected to said shaft, said hand actuated member having graduations thereon for indicating the degree of turning of said shaft.

FRANK COZZOLI.