May 25, 1948. D. L. SHANKLIN ET AL 2,442,179

CROWN CLOSURE LINING MACHINE

Filed Oct. 21, 1942 7 Sheets-Sheet 1

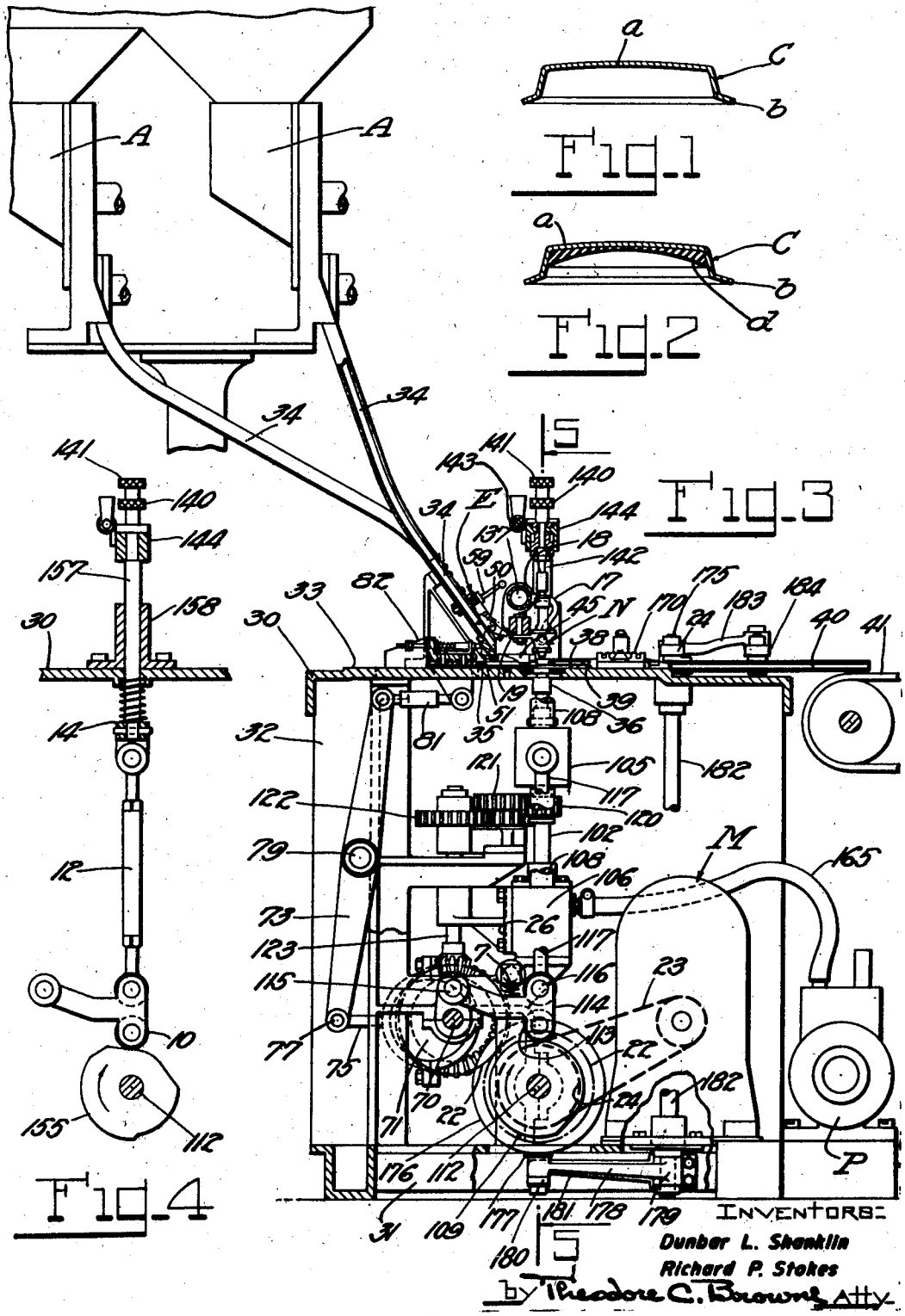

Fig. 1

Fig. 2

Fig. 3

Fig. 4

INVENTORS:
Dunbar L. Shanklin
Richard P. Stokes
by Theodore C. Browne, Atty.

May 25, 1948. D. L. SHANKLIN ET AL 2,442,179

CROWN CLOSURE LINING MACHINE

Filed Oct. 21, 1942 7 Sheets-Sheet 2

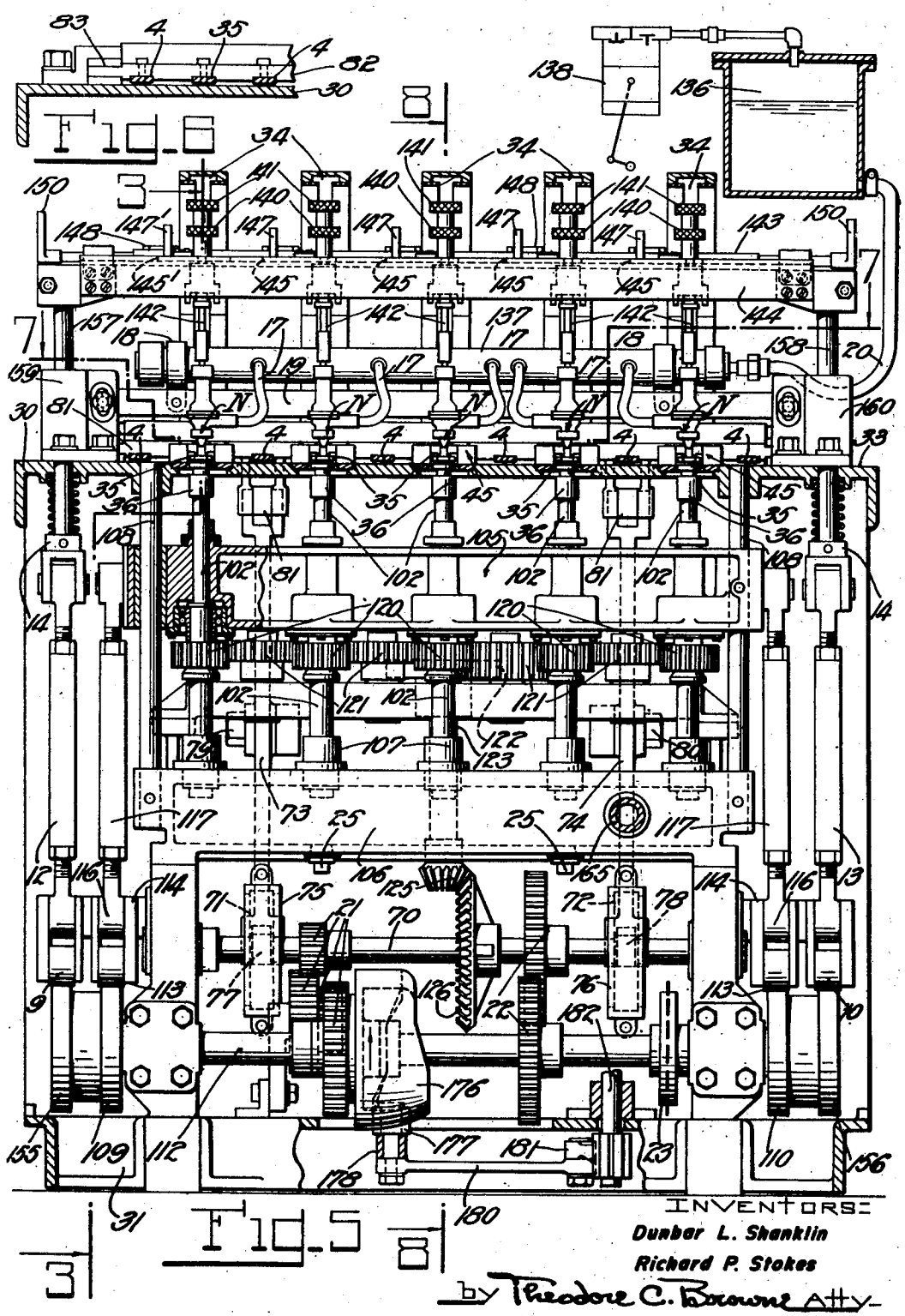

FIG. 5

INVENTORS:
Dunbar L. Shanklin
Richard P. Stokes
by Theodore C. Browne Atty.

May 25, 1948. D. L. SHANKLIN ET AL 2,442,179

CROWN CLOSURE LINING MACHINE

Filed Oct. 21, 1942 7 Sheets-Sheet 3

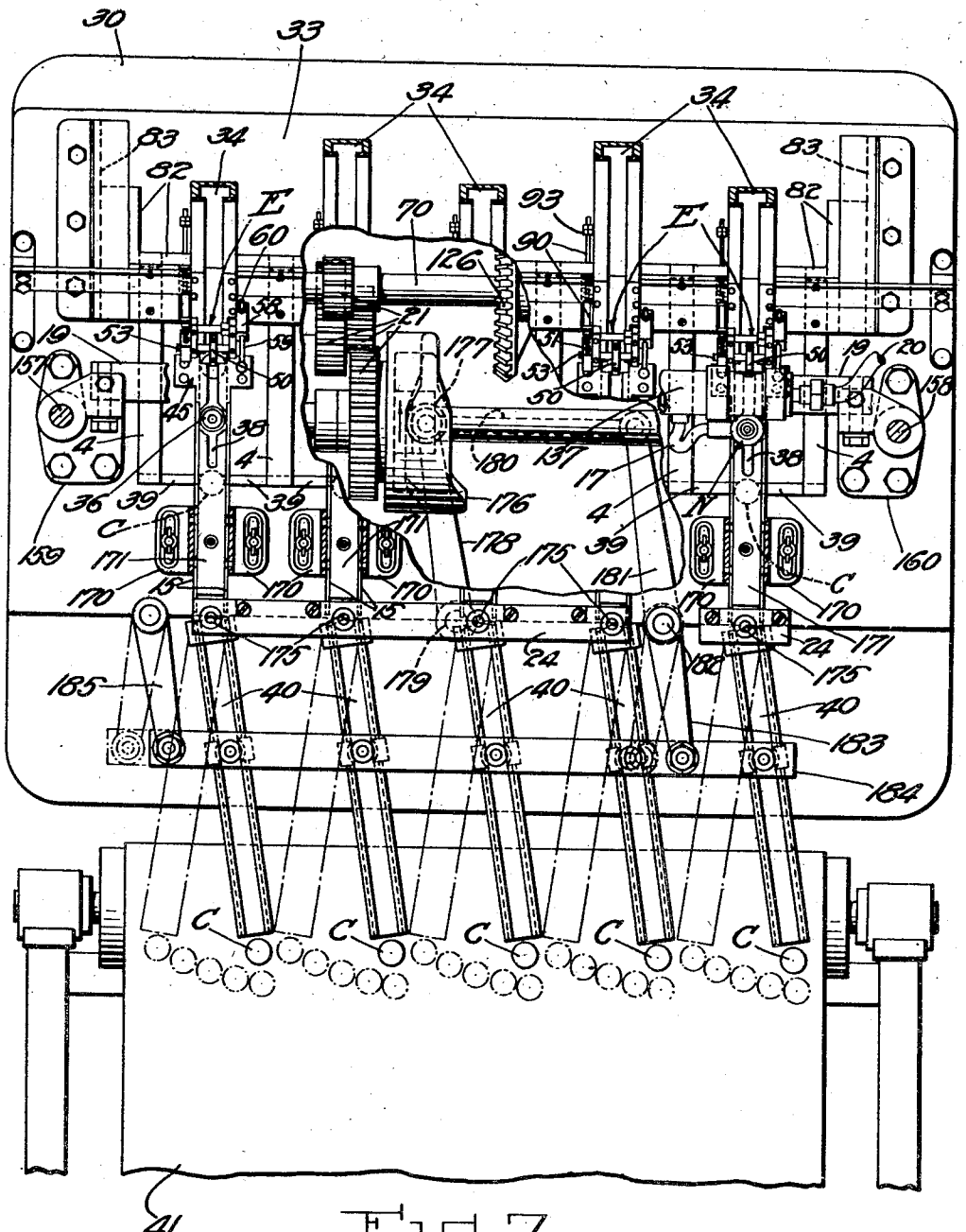

Fig. 7

INVENTORS:

Dunbar L. Shanklin

Richard P. Stokes

by Theodore C. Brown Atty.

May 25, 1948. D. L. SHANKLIN ET AL 2,442,179

CROWN CLOSURE LINING MACHINE

Filed Oct. 21, 1942 7 Sheets-Sheet 4

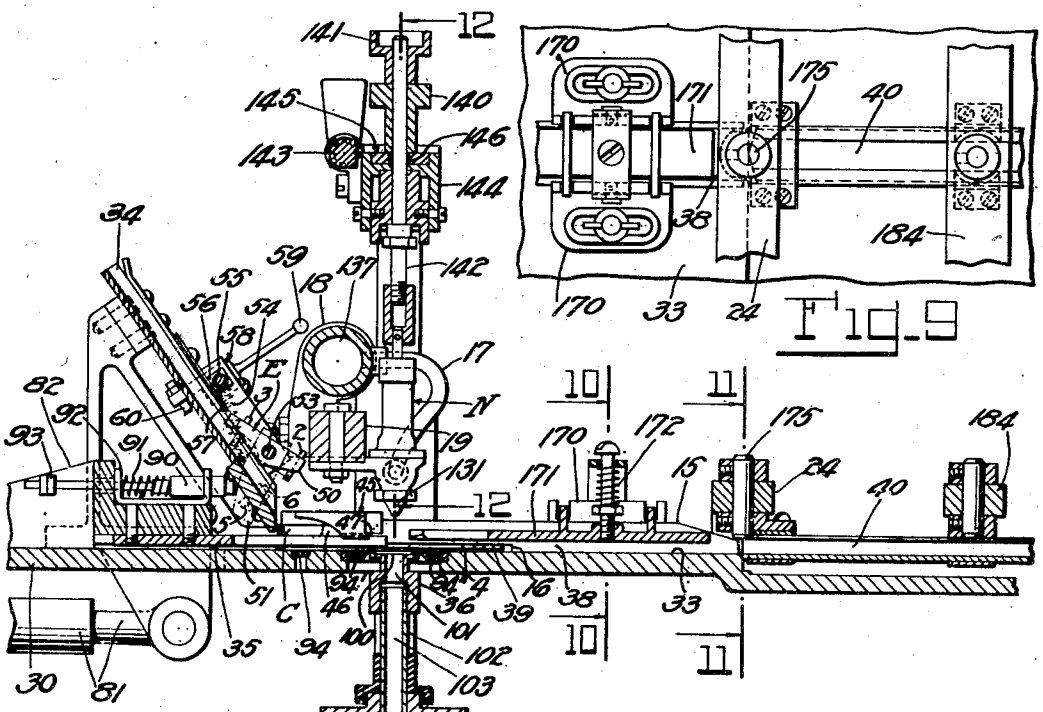

Fig. 8

Fig. 9

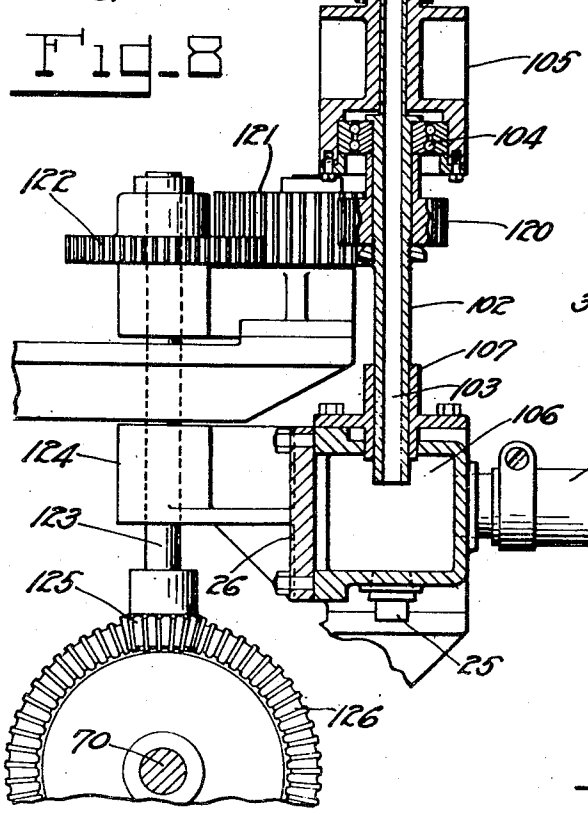

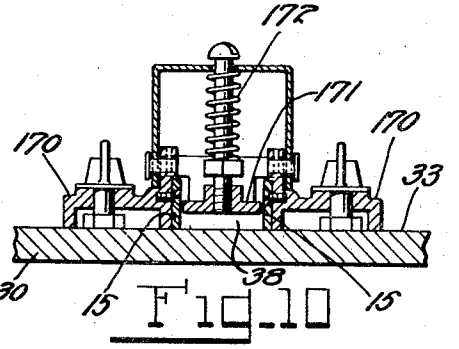

Fig. 10

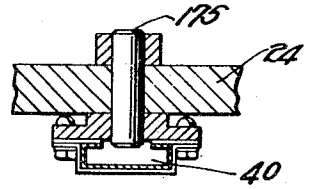

Fig. 11

INVENTORS:

Dunbar L. Shanklin

Richard P. Stokes

by Theodore C. Browne

Atty.

May 25, 1948. D. L. SHANKLIN ET AL 2,442,179

CROWN CLOSURE LINING MACHINE

Filed Oct. 21, 1942 7 Sheets-Sheet 5

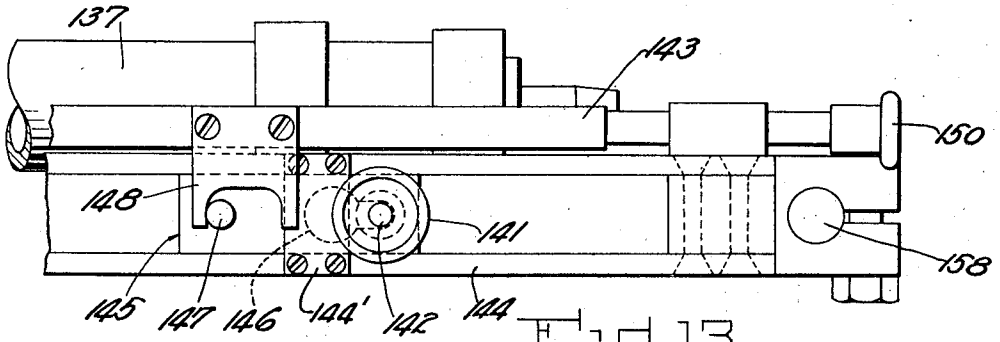

Fig. 13

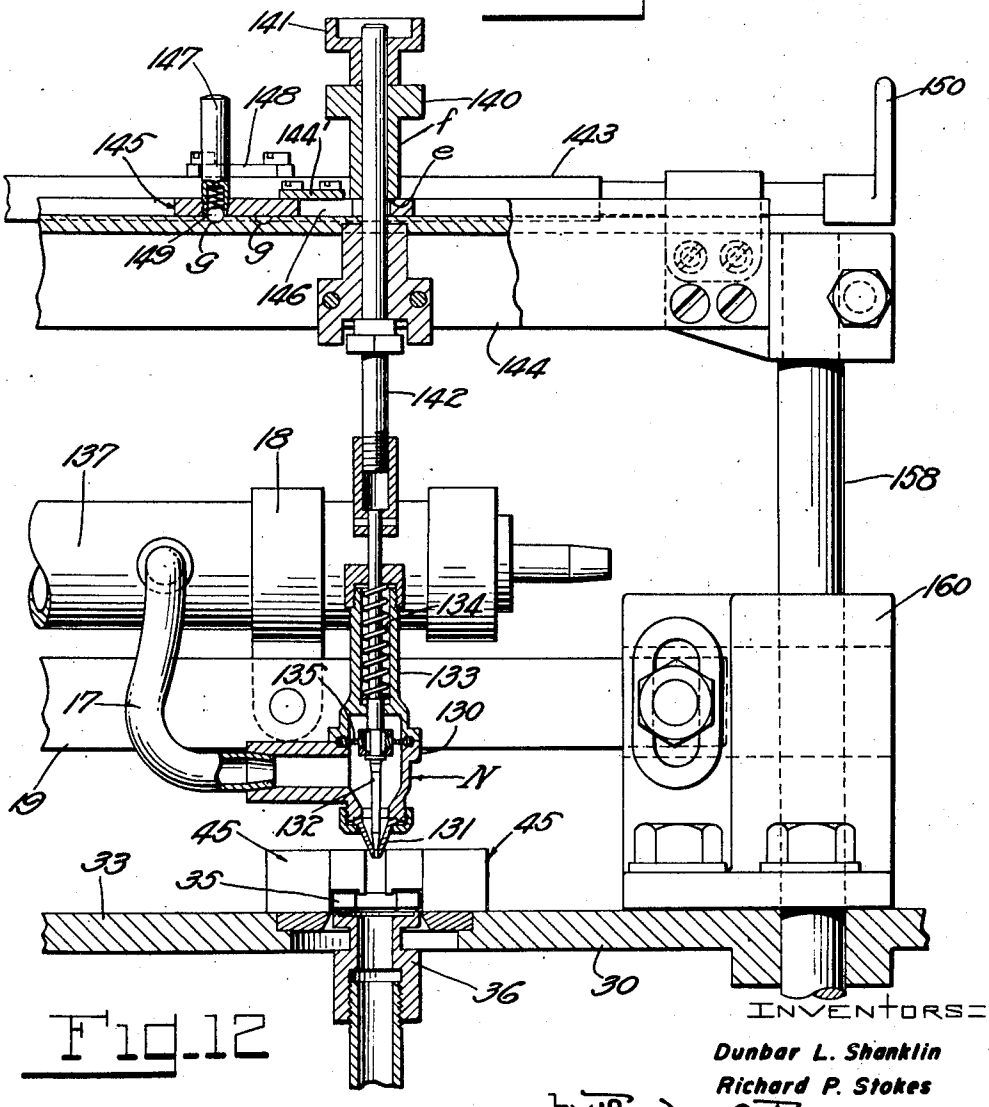

Fig. 12

INVENTORS:
Dunbar L. Shanklin
Richard P. Stokes
by Theodore C. Browne Atty.

May 25, 1948. D. L. SHANKLIN ET AL 2,442,179

CROWN CLOSURE LINING MACHINE

Filed Oct. 21, 1942 7 Sheets-Sheet 6

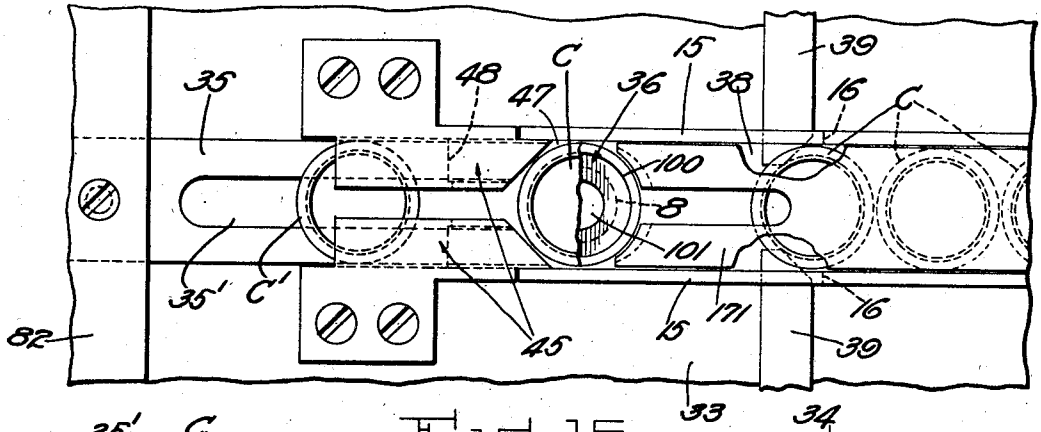

Fig. 15

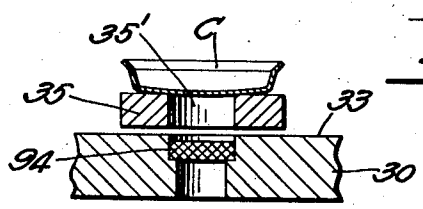

Fig. 17

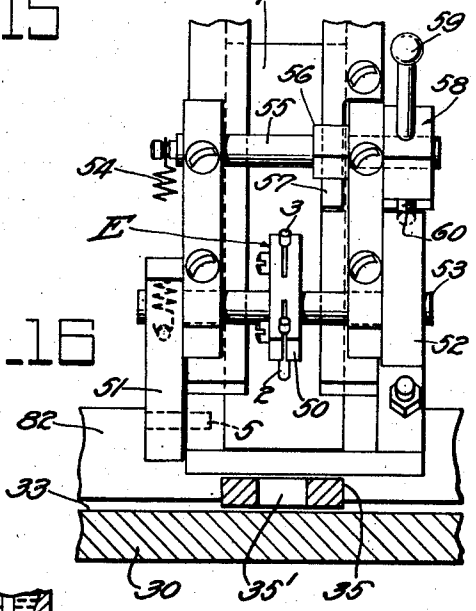

Fig. 16

Fig. 14

INVENTORS:

Dunbar L. Shanklin

Richard P. Stokes

by Theodore C. Browne Atty.

May 25, 1948. D. L. SHANKLIN ET AL 2,442,179

CROWN CLOSURE LINING MACHINE

Filed Oct. 21, 1942 7 Sheets-Sheet 7

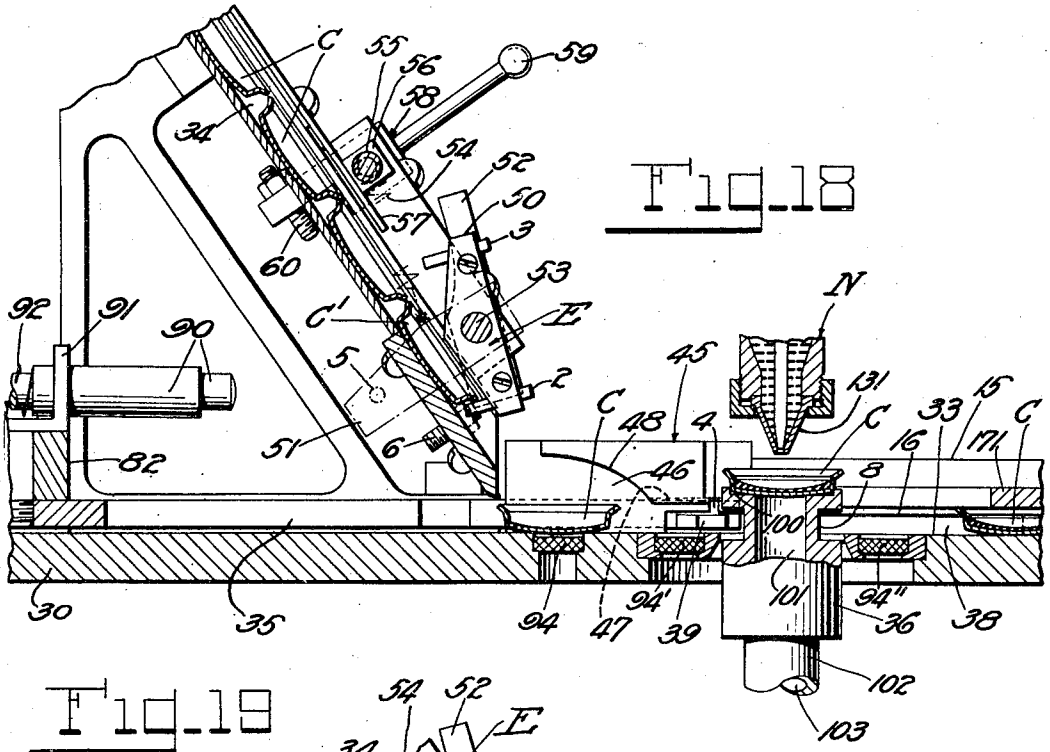

Fig. 18

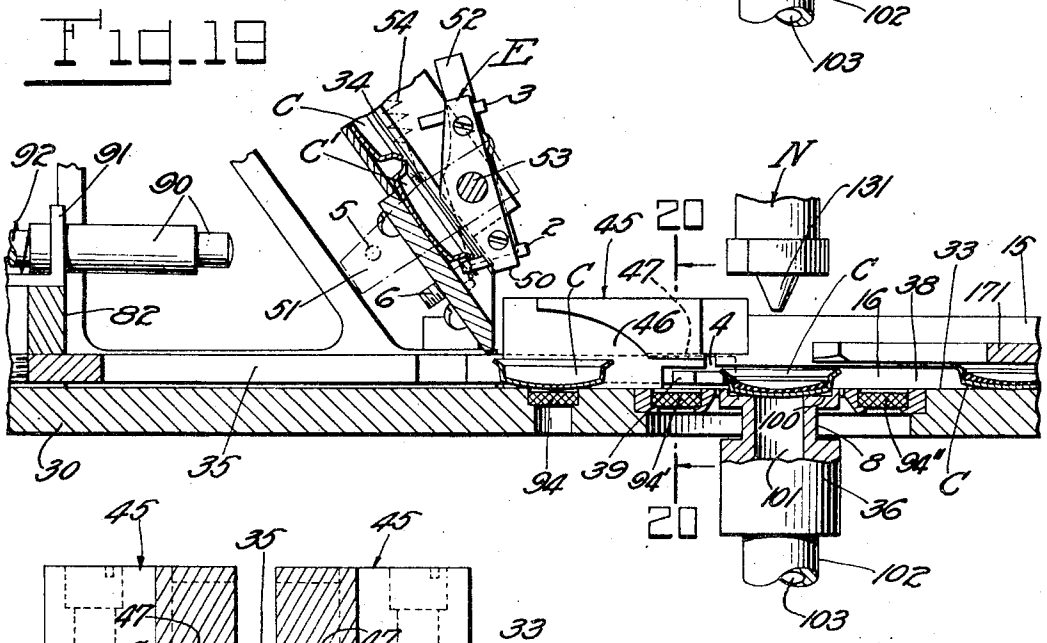

Fig. 19

Fig. 20

INVENTORS:

Dunbar L. Shanklin

Richard P. Stokes

by Theodore C. Browne Atty.

Patented May 25, 1948

2,442,179

UNITED STATES PATENT OFFICE

2,442,179

CROWN CLOSURE LINING MACHINE

Dunbar L. Shanklin, Winchester, and Richard P. Stokes, Malden, Mass., assignors to Dewey and Almy Chemical Company, North Cambridge, Mass., a corporation of Massachusetts

Application October 21, 1942, Serial No. 462,802

8 Claims. (Cl. 91—43)

1

This invention relates to a high speed, automatic machine for lining skirted closures and more particularly bottle crowns and caps according to the process claimed in the patent to Charles H. Egan, No. 1,956,012.

The function of the machine is to feed unlined crowns beneath nozzles which inject a liquid composition into the crowns, spin the crowns until the liquid composition has been banked against the vertical crown walls and then pass the crowns on to the belt of a drying apparatus where the liquid is evaporated from the composition and the composition is dried to form a distortable rubber-like seal which effectually closes a glass container in an hermetic manner.

The objects of the invention are to produce a machine capable of handling large numbers of crowns in a rapid and effective manner, perform the lining operations automatically, produce a machine which will not stop or be placed out of order if the sealing compound accidentally misses a crown and squirts into the machine parts, and produce a machine which will line crowns in a uniform manner to maintain close tolerances. These and other objects will become apparent from the specification and from the drawings in which:

Figures 1 and 2 are sectional views of a crown before and after the lining operation;

Figure 3 is an end elevation of the complete crown lining apparatus, the crown lining machine thereof being partly in section on the line 3—3 of Figure 5;

Figure 4 is a view similar to Figure 3, showing the nozzle operating means;

Figure 5 is a rear elevation of the crown lining machine, the view being taken from the right of Figure 3 and being partly in section on the line 5—5 thereof;

Figure 6 is a view similar to Figure 5 showing the mounting of the feed beam;

Figure 7 is a plan view of Figure 5 partly broken away and partly in section on the line 7—7 thereof;

Figure 8 is an enlarged vertical section taken substantially on the line 8—8 of Figure 5;

Figure 9 is a plan view of a portion of Figure 8;

Figures 10 and 11 are vertical sections taken on the lines 10—10 and 11—11 respectively of Figure 8;

Figure 12 is an enlarged fragmentary view in rear elevation and partly in section on the line 12—12 of Figure 8;

Figure 13 is a plan view of Figure 12;

Figure 14 is an enlarged vertical section similar to Figure 8 showing the initial operation of the crown lining machine;

2

Figure 15 is a horizontal section taken on the line 15—15 of Figure 14;

Figure 16 and 17 are vertical sections taken on the lines 16—16 and 17—17 respectively of Figure 14;

Figures 18 and 19 are views similar to Figure 14 but showing subsequent operations; and

Figure 20 is a vertical section taken on the line 20—20 of Figure 19.

General organization

Figure 1 of the drawings shows an unlined crown C such as is used to cap a container. It comprises a domed portion *a* which terminates at its open end in a flange or skirt *b*. Figure 2 shows the crown C after "lining," an operation in which the lining compound, indicated at *d*, is spread thinly over the central part of the portion *a* and banked high against the side walls, thus providing a sealing mass of considerable thickness where contact is made with the open end of the container.

The machine for applying the lining compound comprises a table-like casting 30 having a base 31, side members 32 and a top or table 33. The crowns C are fed to the machine from a crown sorting and feeding mechanism of any conventional type. This mechanism, indicated at A in Figure 3, serves to align the crowns with a series of feed chutes 34, and to pass into the chutes only crowns which face upwardly (open ends towards the right in Figure 3). The crowns slide down the chutes 34, by gravity, but are checked by an escapement mechanism E and released one at a time to receivers 45 through which feed slides 35 (Figures 3, 8, 14 and 17) reciprocate. Each of the receivers 45 (see particularly Figures 14, 15 and 20) comprises two parts which are secured to the table top 33, in properly spaced relation to provide a receiving chamber 46 into which the crowns are discharged from the chute 34 and a channel 47 through which the crowns are moved forward by the feed slide 35. The receiving chamber 46 is formed, in part, by an undercut wall 48 which is curved as shown in Figure 14. The feed slides 35 move the crowns forward to rotary chucks 36. These chucks rotate the crowns while the compound *d* is squirted into them from nozzles N. When the crowns have been lined they are stripped from the chucks and moved forward through ways or tracks 38 by stripper fingers 39 to a group of distributing guides 40, by which they are placed on the con-

veyor belt 41 and carried to the dryer (see particularly Figures 7 to 11 inclusive).

For clarity of description, the individual functions of the machine and the means by which these functions are achieved will be separately described.

Crown delivery

The crowns are delivered to each chuck by a chute 34 and descend to lining position when released by the escapement E. The escapement assembly comprises a rocker arm 50 having front and rear stop pins 2 and 3 respectively, an operating arm 51, and a locking arm 52, all being fixed on a shaft 53 which extends across the chute 34 (Figures 3, 7, 8, 14, 16, 18 and 19). The assembly is biased by a spring 54, which normally pulls the escapement into the position shown in Figures 18 and 19. A pin 5 carried by each of the operating arms 51 engages the under side of its corresponding chute 34 (Fig. 14) to limit the movement of the escapements, and, consequently, of the rocker arms 50, in one direction, while an adjustable abutment screw 6 adapted to be engaged by the latch arm 52 limits the movement in the other direction of the rocker arms 50, as shown in Figures 18 and 19. A manually operable latch mechanism is provided for locking each escapement to stop the feed of each separate line of crowns. The latch comprises a shaft 55 which also extends across the chute 34 and which carries a square block 56 arranged to bear against a leaf spring 57 (Figures 8, 14, 16 and 18). The latch 58 carries an operating handle 59 and an adjustable abutment screw 60. When the handle 59 is lifted, spring 57, working against the block 56, snaps the shaft 55 through 90° and causes the abutment screw 60 to engage the locking arm 52. This movement throws the rocker arm 50 into its forward (non-delivery) position where the crown is stopped by the front stop pin 2 carried by the rocker arm 50.

Feed

Shaft 70 (Figures 3 and 5) carries two eccentrics 71 and 72. These actuate rocker arms 73—74 through eccentric straps 75—76 pivoted to the arms at 77—78. Pins 79—80 attached to the main frame form the fulcrum points for the arms. The free ends of the rocker arms are connected by links 81 with a feed beam 82 (Figure 5, 6 and 7) which is mounted in ways 83 (Figures 6 and 7) in such a manner that it may reciprocate across the surface of the table 33 which forms the top of the main frame. Feed beam 82 carries the operating mechanisms for the several escapements, which comprise a series of plungers 90 slidably mounted in brackets 91 secured to the feed beam. Each plunger 90 is urged towards the operating arm 51 of its corresponding escapement by a spring 92, the movement of each plunger, so caused, being limited by a nut 93 in threaded engagement with a reduced rear portion thereof (Figures 8, 14, 18 and 19). A feed slide 35 (Figures 3, 8, 14 and 15) is attached to the feed beam 82 opposite each chuck and in line with its center. Feed slides 35—35 are capable only of delivering crowns from the chutes 34 to the chucks 36. The removal of the lined crowns from the chucks 36 is performed by the stripper fingers 39 which extend parallel to the line of chucks a short distance in advance of the feed slides 35. Fingers 39 are mounted at the ends of arms 4 which also are attached to the feed beam 82.

The feed operation is as follows. When the handles 59 are in the position shown in Figures 8, 14 and 18, the crowns are free to descend until engaged by the front stop pin 2 (as shown in Figure 18). As the feed beam 82 advances, the spring pressed plungers 90 strike the escapement operating arms 51 and rotate them together with the rocker arms 50 until the pins 5 carried by arms 51 hit the bottom walls of the crown chutes 34. Then the springs 91 are compressed as the feed beam 82 advances further. Rotation of the rocker arm 50 releases the lowermost crown C^1 shown stopped by the pin 2 in Figures 18 and 19, while pin 3 stops crown C^2 (Figure 14). Crown C^1 now slides into the position shown in Figure 14. As the crown descends to this position, the forward portion of its skirt *b* engages the wall 48 of the receiver 45 which forces the crown to settle down onto the top of the feed slide 35. The radius of curvature of a bottle crown is 5 inches. Hence, in falling on to a flat surface, crowns rock badly. To prevent this, each slide 35 is slotted as shown at 35' (see particularly Figures 14–17 inclusive) to give the crown a two-point support. In addition, damping magnets 94 are inserted in the table directly beneath the receiving chambers. The slot in the slide 35 also prevents shorting of the magnetic field. As a result of the combined effect of the curvature of the receiving chambers, the two point support provided by the feed slides 35 and the damping effect provided by the magnets 94, the crowns, despite their curvature, come to rest at once.

The feed slide 35 now starts its backward stroke from the position shown in Figure 14. The crown, resting on the slide 35 moves backwards with the slide, but is stopped when it engages the front face of the chute 34 while the slide continues to be retracted beneath the crown until it reaches the position shown in Figure 18. Just before the slide reaches the end of its reverse stroke, the crown drops off the slide and occupies the position shown in Figures 18 and 19 just above the magnet 94. Meanwhile, the backing away of plunger 90 allows the biasing spring 54 to snap the escapement mechanism into the position shown in Figures 18 and 19 and thus prevent further discharge of the crowns from the chute until after the feed slide 35 has again been advanced to its forward position. Note that the magnets 94 are not flush with but are sunk slightly ($\frac{1}{32}$") below the table top. This depression forms a ring seat for the crown which thus is steadied by the circular line of support and the pull of the magnet.

Chucks and chuck drive

The chucks 36 rotate continuously. Each chuck is provided in its upper face with a shallow counterbore 100 and communicating therewith is an axial bore 101. Each chuck is carried on a spindle 102 (Figs. 3, 5, 8, 14, 18 and 19) which is provided throughout its length with an axial bore 103 that is aligned with axial bore 101 and counterbore 100 of the chuck. Each spindle is mounted in ball bearings 104 (Figure 8) which are fastened in the spindle beam 105. Each spindle 102 enters vacuum chest 106, through sleeve bearings 107. The chest 106 which acts as a spilled compound sump, is provided with cleanout plugs 25 (Figures 5 and 8) and a removable cover 26, shown in Figures 3 and 8. Rods 108 (Figure 5) extending between the table top 30 and the chest 106 form guides on which the beam 105 is mounted and along which it reciprocates vertically. The vertical motion of the spindle beam 105 is derived from the

cams 109 and 110 (Figures 3 and 5) carried on shaft 112. Each cam works against a cam follower assembly which comprises a cam follower 113 carried by a spring biased arm 114 pivoted on the main frame at 115 (Figure 3) and attached at 116 to the adjustable beam push rods 117. One of the biasing springs is shown at 7 (Figure 3). As shaft 112 revolves, the spindle beam 105, and, consequently, all of the chucks 36, will rise and fall. Each spindle bears a vertically movable gear 120 (Figures 3, 5 and 8) which meshes with fixed gears 121. The gears 120 are driven by a gear 122 meshing with at least one of the gears 121 and carried on the shaft 123 which is journaled in a special extension 124 of the vacuum chest 106. The lower end of shaft 123 bears a bevel pinion 125, which meshes with the bevel gear 126 carried on the shaft 70. The shaft 70 (Figures 3 and 5) is driven by gears 22 from the shaft 112 which is itself driven by a motor M through a chain 23 and a sprocket 24 carried by shaft 112.

The vertical motion of the chucks 36 is in timed relation to the movement of the feed slides 35. As shown in Figures 14, 15 and 18 the stripper fingers 39, which reciprocate with the feed slides pass, on their return or rearward strokes, through annular grooves 8 cut in the chucks 36 because the chucks are in their upper positions at this time. The chucks remain down throughout most of the forward strokes of the feed slides. Upon advance of the feed slides, the stripper fingers 39 pass above the chucks 36 and sweep the lined crowns off and into the ways 38, while the feed slides 35 push the next crowns through the channels 47 and onto the chuck faces. Magnets 94' and 94'' (similar to the magnets 94 previously described) are provided, respectively, to stabilize the crowns as they pass through the channels 47 and as they are received in the delivery ways 38.

The crowns are pushed nearly to their final positions on the chucks by the feed slides. They are guided into final position by the vertical walls of the counterbores 100. Each crown is seated on the circular edge formed at the junction of the counterbore 100 and the axial bore 101, and when seated, shuts off the flow of air into the chuck.

The nozzles N differ but slightly from nozzles used on can end lining machines. Each consists of a stainless steel body 130 (see particularly Figure 12) having a replaceable nose piece 131, a needle 132 and a spring barrel 133. A spring 134 bears against a collar supported by a shoulder on the needle and normally urges the needle against a ground seat in the nose piece. Lining compound is prevented from entering the spring housing by the diaphragm 135. The immediate supply of lining compound is stored in the tank 136 (Figure 5) and delivered through a tube 20, to the manifold 137 and from the manifold through tubes 17 to the nozzles N by a pneumatic head of a few pounds derived from the compressor 138. Manifold 137 is supported by brackets 18 (Figures 3, 5, 7, 8 and 12) secured to a cross rail 19 which is itself adjustably supported by brackets 159 and 160 secured to opposite sides of the table 30. When the needle 132 is raised in the nozzle N, a stream of compound is shot downwardly. With the pneumatic head and diameter of the orifice in the nose piece 131 fixed, the quantity of compound which the nozzle delivers is controlled by the lift of the needle. Adjustment of needle lift is secured by means of

handwheels 140, 141 which are in threaded engagement with needle pull rods 142, the upper handwheels 141 serving merely as lock nuts, while the lower handwheels 140 make the actual adjustment.

Individual lock-out

A slide rod 143 on the needle lift bar 144 (Figures 3, 5, 8, 12 and 13) which is slidably mounted in lift bar 144 beneath cover plates 144' operates a number of latches 145. Latches 145 are provided with apertures 146 through which the needle pull rods 142 pass. The apertures 146 are keyhole shaped so that they clear the needle pull rods 142 but engage the bottom face *e* of the needle adjusting handwheels 140 when the latches 145 are in their operating positions shown most clearly in Figures 12 and 13. Each of the latches 145 is provided with an upstanding handle 147 which is received between the arms of a fork 148 secured to the slide rod 143. Handles 147 carry spring pressed balls 149 (Figure 12) which are adapted to engage either one of two notches *g* formed in a portion of the needle lift bar 144. The notches *g* are spaced to limit the movement of the latch to its operative and inoperative positions. When either handle 150 of the slide rod 143 is moved toward the right in Figures 5, 12 and 13, the enlarged portions of the apertures 146 of the latches 145 then clear the shank portions *f* of the adjusting handwheels 140 and all of the needles are then rendered inoperative. However, any one of the latches may be actuated independently to render its corresponding needle operative or inoperative by manipulation of one of the handles 147. For example, in Figure 5, the handle 147' is shown in position to render the latch 145' inoperative while the remainder of the latches are in their operative positions.

The vertical movement of the needle lift bar 144 (Figures 4 and 5) is secured by motion derived from cams 155 and 156 mounted on the opposite outboard ends of the shaft 112. The cam motion is transmitted through cam followers 9 and 10, and connecting rods 12 and 13 to the beam push rods 157 and 158 which are guided for vertical movement in sleeves carried by the brackets 159 and 160 previously referred to. Springs, surrounding the push rods and mounted between the table 30 and a collar 14 on the rods urge the cam followers 9 and 10 into continuous contact with their respective cams. When the shaft 112 revolves, the needle beam 144 is raised and lowered in timed relation to the other operations of the machine.

As previously explained, the crowns, when seated on the chucks 36, form an effectual seal which prevents the passage of air through the chucks 36 and the chuck spindles 102. By connecting a vacuum pump P with the vacuum chest 106 by means of a tube 165 (Figures 3, 5, and 8) a continuous current of air is pulled through the chucks. Thus when a crown is moved onto the face of a chuck it is pulled into position in the counterbore by the vacuum which is created.

The needles 132 and chucks 36 lift practically at the same moment and just before the chuck and the crown which it holds, reaches its top position, the compound flows into the crown as shown in Figure 14. Then the needle lift bar 144 falls, the nozzles close and the flow of compound to all crowns stops before the chucks begin to descend. The loaded crowns spin in the raised position (Figure 18) after the flow of com-

pound stops. The rotary speed of the chuck is set to create a centrifugal force greater than the yield value of the lining composition so that the compound squirted into the center of the crown is banked against its vertical walls. The cross section of a lined crown (Figure 2) shows the type of lining which is secured by this operation. The entire inner surface of the crown is covered with compound which is materially thinner in the center, or non-sealing portion, and thicker at the edges where a mass of sealing material is required to form a plastic seat for the open end of a bottle or other container.

After the lining has been given the form shown in Figure 2, the chuck falls, the feed slides 35 and stripper fingers 39 begin to advance and the machine begins a second cycle of operation. As the crowns are pushed off the chucks they enter the delivery ways 38, the side walls 15 of which are cut away at 16 (Figures 8, 14, 15, 18 and 19) so that the stripper fingers may enter. A cross section through one of the ways 38 is shown in Figure 10, in which the side walls 15 are shown supported by brackets 170 secured to the table 30 (see also Figures 3, 7, 8 and 9). A floating top brake 171, urged towards the table by a spring 172, prevents the crowns from overriding, locking their flanges together, or jamming in the tracks 38.

The inner ends of the distributing guides 40 are pivoted at 175 to cross members 24 (Figures 3, 7, 8, 9 and 11) to swing horizontally through arcs (from the full line to the broken line positions in Figure 7) controlled by a cam 176 loosely mounted on the shaft 112 (Figures 3, 5 and 7), and driven from the shaft 70 by a train of gears indicated at 21. The motion is transmitted from the cam 176 to the distributing guides 40 through a cam follower 177 carried by an arm 178 which is pivoted at 179 to the base of the machine. The free end of the arm 178 is connected by a link 180 with one end of an arm 181, the other end of which is secured to the lower end of a vertical rocker shaft 182. The upper end of the rocker shaft carries an arm 183 (Figures 3 and 7) which is pivotally connected to one end of a cross member 184 to which the distributing guides 40 are pivotally connected (see also Figures 8 and 9). The other end of the cross member 184 is pivotally connected to an arm 185 equal in length to arm 183, and pivotally connected to the table 30. As shown in Figure 7, cam 176 is designed to move the distributor arms step-wise, allowing them to dwell momentarily as each crown drops onto the moving belt. A steep contour at one place in the cam causes a quick return swing of the distributing guides. The return swing takes the same length of time as an advancing step, so that, as the cam revolves, crowns being delivered at the end of the guides cover substantially the full surface of the conveyor belt 41 (Figure 7) where the broken line positions indicate the successive delivery points of the crowns which are dropped in one sweep of the distributing guides. The full line position indicates the first crown dropped in the following sweep. The belt 41 passes through a conventional can end lining tunnel dryer (not shown) where the liquid content of the lining compound is evaporated.

Although the machine has been described as "a crown lining machine," and crowns of the familiar type have been illustrated, it is obvious that the machine is equally well adapted to the lining of skirted container closures of any type and we intend that the word "crown" as used in the specification and claims shall include skirted closures generally.

We claim:

1. In a crown lining machine, the combination of a hollow spindle mounted for rotation on a vertical axis, a chuck mounted on the upper end of said spindle and having an annular crown-seating surface surrounding a central bore in alignment with the bore of said spindle, and a compound-applying nozzle mounted above said chuck and being positioned to discharge a stream of compound substantially along the axis of said spindle so that said compound will be discharged into the bore of said spindle in the absence of a crown on said chuck.

2. In a crown lining machine the combination according to claim 1 and including vacuum producing means connected to the lower end of said spindle.

3. In a crown lining machine, the combination according to claim 1 and including a sump connected to the lower end of said spindle for receiving lining compound discharged into said spindle.

4. In a crown lining machine, the combination according to claim 1 and including a sump connected to the lower end of said spindle for receiving compound discharged into said spindle, vacuum producing means, and a connection from said sump to said vacuum producing means for maintaining said sump and spindle under vacuum.

5. In a crown lining machine, the combination of a hollow spindle mounted for rotation on a vertical axis, a chuck mounted on the upper end of said spindle and having an annular crown-seating surface surrounding a central bore in alignment with the bore of said spindle, a vacuum chamber surrounding the lower end of said spindle, means for maintaining a vacuum in said chamber, a substantially vacuum-tight seal between said chamber and said spindle, and means for reciprocating said spindle along its axis while maintaining connection with said vacuum chamber.

6. In a crown lining machine, the combination of a horizontal beam mounted for reciprocation in a vertical direction, a plurality of hollow spindles journaled on said beam for rotation about vertical axes but being restrained against axial movement with respect to said beam, a plurality of chucks mounted on the upper ends of said spindles, each chuck having an annular crown-seating surface surrounding a central bore in alignment with the bore of the mounting spindle, a vacuum chest positioned below said spindles with the lower ends of said spindles extending into said chest through openings formed therein, means for maintaining a vacuum in said chest means providing a substantially vacuum-tight seal between each spindle and said chest in each of said openings to permit rotation and axial reciprocation of said spindles, and means for vertically reciprocating said horizontal beam from a crown-loading position to a crown-filling position and vice versa.

7. In a crown lining machine, the combination according to claim 1 and including a chamber surrounding the lower end of said spindle, means for maintaining a vacuum in said chamber, a substantially vacuum-tight seal between said chamber and said spindle, and means for reciprocating said spindle along its axis while maintaining connection with said vacuum chamber.

8. In a crown lining machine, the combination according to claim 6 and including a compound-

applying nozzle mounted above each of said chucks and being positioned to discharge a stream of compound substantially along the axis of the supporting spindle of the chuck so that said compound will be discharged into said vacuum chest in the absence of a crown on any chuck.

DUNBAR L. SHANKLIN.
RICHARD P. STOKES.

REFERENCES CITED

The following references are of record in the file of this patent:

UNITED STATES PATENTS

Number	Name	Date
615,725	Lindemeyr	Dec. 3, 1898
938,460	Butler	Nov. 2, 1909
1,041,028	Church	Oct. 15, 1912
1,318,935	Thornburgh	Oct. 14, 1919
1,430,050	Becker	Sept. 26, 1922
1,446,024	Tournquist	Feb. 20, 1923
1,574,913	McManus	Mar. 2, 1926
1,748,914	Dewey	Feb. 25, 1930
1,932,529	Nagy	Oct. 31, 1933
1,956,012	Egan	April 12, 1934
1,983,471	Kramer	Dec. 4, 1934
2,046,197	Kronquest	June 30, 1936
2,116,475	Daneke	May 3, 1938
2,117,711	Eisen	May 17, 1938
2,264,632	Gerlitzki	Dec. 2, 1941