April 21, 1964 H. A. ROHDIN 3,129,817

ORNAMENTAL AND PROTECTIVE BLISTER PACKAGE

Filed June 1, 1961

2 Sheets-Sheet 1

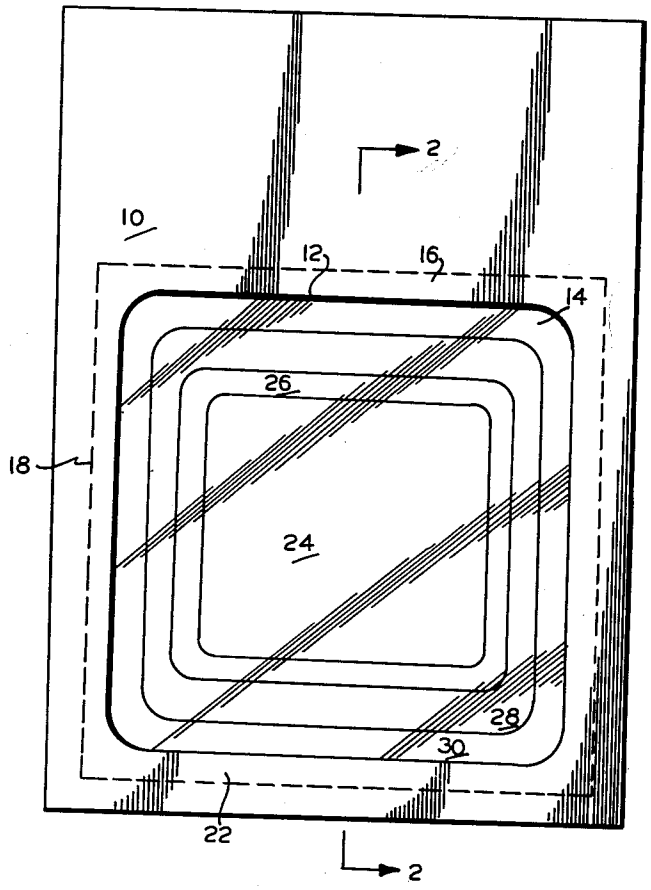

FIG. 1

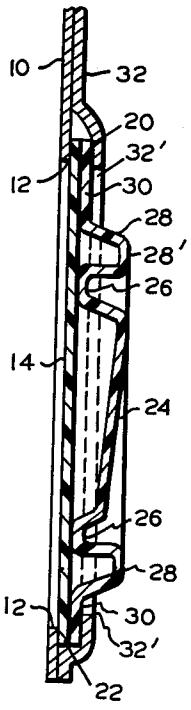

FIG. 2

INVENTOR.
HOWARD A. ROHDIN
BY
ATTORNEY

April 21, 1964 H. A. ROHDIN 3,129,817

ORNAMENTAL AND PROTECTIVE BLISTER PACKAGE

Filed June 1, 1961

2 Sheets-Sheet 2

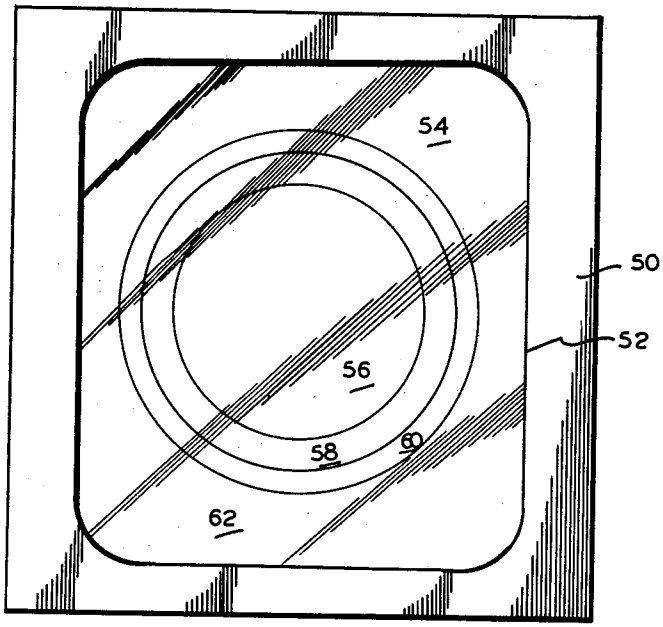

FIG.3

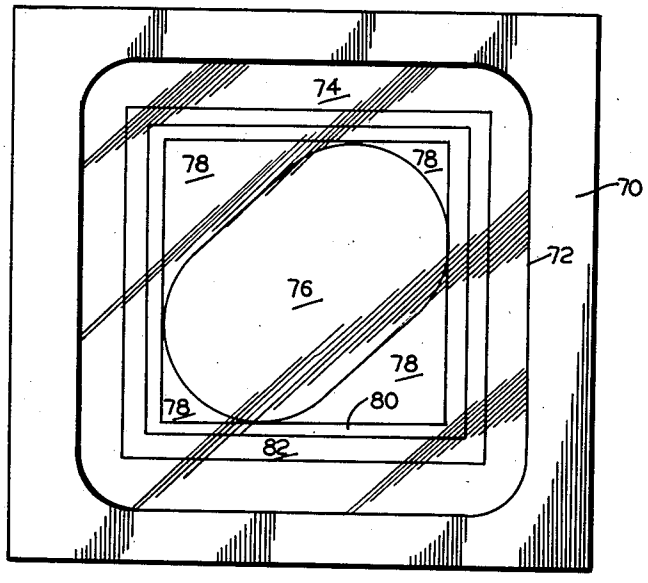

FIG.4

INVENTOR.
HOWARD A. ROHDIN
BY
ATTORNEY

United States Patent Office 3,129,817
Patented Apr. 21, 1964

3,129,817

ORNAMENTAL AND PROTECTIVE BLISTER PACKAGE

Howard A. Rohdin, 397 Forest Ave., Glen Ridge, N.J.

Filed June 1, 1961, Ser. No. 114,157
1 Claim. (Cl. 206—78)

Among the objects of this invention are: to provide a blister type package which will form an attractive display of the contents; which will afford excellent mechanical protection for the contents; and which will promote the efficiency of the packaging operation.

The above and other objects will be made clear from the following detailed description taken in connection with the annexed drawings in which:

FIGURE 1 is a front elevation of the improved package;

FIGURE 2 is a section on the line 2—2 of FIGURE 1; and

FIGURES 3 and 4 are views similar to FIGURE 1 but showing variations in form of the improved package.

In my copending application, Serial No. 114,158, filed of even date herewith, now abandoned, I have shown a blister type package having such improved display characteristics as to adapt it to merchandise now regarded as of too high class or quality to be packaged by the blister system. The present invention, to be sure, improves the display qualities of the conventional blister package, but its primary purpose is to simplify the packaging operation, and by minimizing down time on the packaging line, to increase the net productivity of such line. When the packaging line is complete in itself, that is, where a single entity forms the blisters, places the contents within the blisters, applies a closure and seals the ultimate package, the present invention accomplishes relatively little in the way of improving the efficiency of the line since a change of contents requires a change not only of the filling and sealing operations, but also of the forming operation, and the incidental down time is not materially increased by the necessity of altering the sealing operation. Where, however, the blisters are formed and withdrawn from stock for filling and sealing, change in the blister, occasioned by a change in the contents, requires down time for alteration of the sealing mechanism.

Many plants are called upon to package a large variety of related items. Prime examples are cosmetics and fishing lures. In either of these lines there may be a hundred or more individual items. As a rule, in such lines there will not be extreme variations of size and shape, but there will be significant differences between individual items. One of the features of the blister type packages lies in having a fair but only a fair fit between the blister and its contained object. Now this requirement of fit may, and usually does require a large variety of blisters, the variety occurring in both shape and size. In these circumstances, a careful analysis of the items in a particular line usually will show that from two to five sheet sizes will accommodate a variety of blisters each conforming acceptably to its particular intended contents.

As used herein, the term "sheet size" refers to the length and width dimensions of the flange surrounding the open mouth of the blister. Since the blisters usually are formed in rows or blocks from a single sheet or web of plastic material, the flange surrounding the blister usually will be of rectangular configuration. It is the shape and size of the flange that determines the shape and size of the sealing equipment and accordingly there must be an adjustment of the sealing equipment for each sheet size. The greater the variety of the sheet sizes, the shorter will be the run for each size. This is the tendency which can lead to an uneconomic proportion of down time for adjustment of the sealing equipment. Conversely, if the number of sheet sizes be reduced, the runs will be lengthened and the proportion of down time will be brought to permissible levels.

The foregoing principles are, per se, clear and simple but their application in practice is quite unobvious. In conventional blister packaging, the cover material is sealed to the flange of the blister closely adjacent the mouth of the blister. The present invention requires, in most cases, that the sealed area to be spaced significantly away from the mouth of the blister. To prevent sagging with consequent distortion of the package and strain on the seal, the present invention contemplates the provision of stiffening or reinforcing means in the blister sheet itself.

Referring now to FIGURES 1 and 2, there is shown a front wall **10** formed of cardboard of from 0.010" to 0.020" in caliper. The wall **10** has formed therein a die cut opening **12**. Over the opening **12** is secured a cover sheet of plastic **14**, sealed to the rear side of the wall **10**. The cover sheet **14** is sealed to the wall **10** in the area **16** indicated by the dotted outline **18** in FIGURE 1. The cover sheet **14** is sealed to the flange **20** of a blister-containing plastic sheet **22**. Approximately centrally of the sheet **22** is formed a contents receiving blister **24**. Both the cover sheet **14** and the blister sheet **22** are plastic of from 0.005" to 0.008" in caliper. All calipers mentioned herein are typical rather than critical and the thicknesses illustrated in FIGURE 2 are grossly exaggerated.

A plane rim **26** surrounds the blister **24** and is surrounded by a ridge or rib **28**. An externally rectangular plane portion **30** surrounds the ridge or rib **28** and extends into the sealing area **16**.

The rib or ridge **28** offers both stiffening and protection. It may, but need not, be coextensive with the blister **24** in the dimension normal to the plane of the wall **10**. It does, however, break up what otherwise would be an undesirable extent of plane surface between the mouth of the blister **24** and the sealing area **16**.

The degree of protection afforded by the rib or ridge **28** depends on the depth of the ridge relative to the depth of the blister **24**. The stiffening effect of the rib or ridge depends on the relative width of the plane portion **26**, of the ridge bottom **28'** and the plane portion **30**. Over and above the strengthening and stiffening effect, the rib or ridge makes a distinct contribution to the display value of the package by providing a "frame" for the contained product. Attention thus is directed to the product rather than to the package.

As best shown in FIGURE 2, a rear wall **32**, coextensive with the front wall **10** may be secured to the wall **10** to overlie the area **16**. The wall **32** is die cut for this purpose as shown at **32'**. If desired, this die cut may have its edges adjacent the rib or ridge **28**, in which case the forward facing surface of the rear wall **32** may be colored or otherwise ornamented in contrast to the front wall **10** and/or the blister **24**, thus adding to the "framing" effect.

FIGURES 3 and 4 simply illustrate two, among many, variations of the formation of the blister sheet within a single form of die cut in the front wall. The die cut itself is variable in size and shape, as may be desired.

In FIGURE 3, there is a front wall **50** having a die cut window **52**. A blister sheet **54** is secured to the rear of the wall **50** and has a circular, contents receiving blister **56** surrounded by a plane portion **58**. The portion **58** is surrounded by a rib or ridge **60** which in turn is surrounded by a plane portion **62**.

In FIGURE 4 a front wall **70** has a die cut opening **72**. A blister sheet **74** is secured to the rear of the wall **70** and has a more or less oval, contents receiving blister **76**. A plane portion **78** surrounds the blister **76** and is surrounded by a rib or ridge **80**, which in turn is surrounded by a plane portion **82**.

In either case, there will be a suitable cover film for the

blister sheets **54** and **74**, and, optionally a rear wall portion may be applied as in FIGURE 2. The rib or ridge, in all cases is molded by the same operation that produces the blister and, within reason, a wide variety of blisters will all present the same sheet size for securement to the cover film and to the front wall. If the rear wall is made identical with or at least equally as presentable as the front wall, the customer will have the option of displaying the package either with a plane surface forward or with the protruding blister forward. If desired the die cut **12** (FIGURES 1 and 2), the die cut **52** (FIGURE 3) and the die cut **72** (FIGURE 4) may be omitted and the "rear" side of the several cards will become the "front" or display side.

I claim:

A blister type package comprising: a front wall of relatively rigid material, said front wall having a die cut window formed therein; a sheet of plastic material secured to the rear of said front wall and substantially coplanar therewith; a second sheet of plastic material secured to the rear of said first named sheet; a contents receiving blister formed in said second named sheet, the external

dimensions of said blister being substantially less than those of said window, and a ridge formed in said second named sheet and substantially surrounding said blister, there being a plane area between said ridge and said blister and between said ridge and the margin of said window both of said plane areas being substantially coplanar with the rear surface of said first named sheet.

References Cited in the file of this patent

UNITED STATES PATENTS

D. 190,396	Robinson	May 23, 1961
2,206,635	Hays	July 2, 1940
2,878,061	Saeks	Mar. 17, 1959
2,884,127	Neary	Apr. 28, 1959
2,952,353	Rohdin	Sept. 13, 1960
2,956,677	Kavadlo	Oct. 18, 1960
2,985,296	Kahn	May 23, 1961
3,054,503	Hartman	Sept. 18, 1962

FOREIGN PATENTS

655,998	Great Britain	Aug. 8, 1951