Sept. 9, 1952 C. H. HARMON 2,609,886

MUFFLER WITH CONCAVE BAFFLES

Filed July 3, 1948 2 SHEETS--SHEET 1

Fig. 1

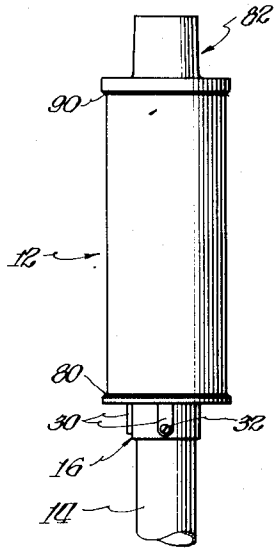

Fig. 2

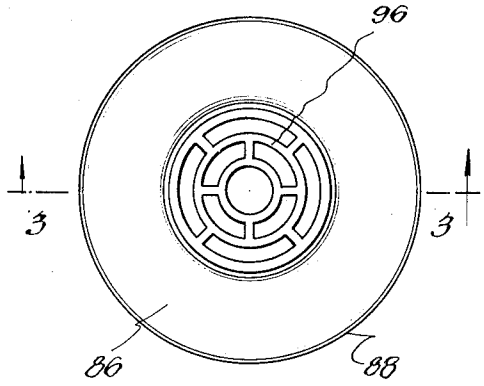

Fig. 3

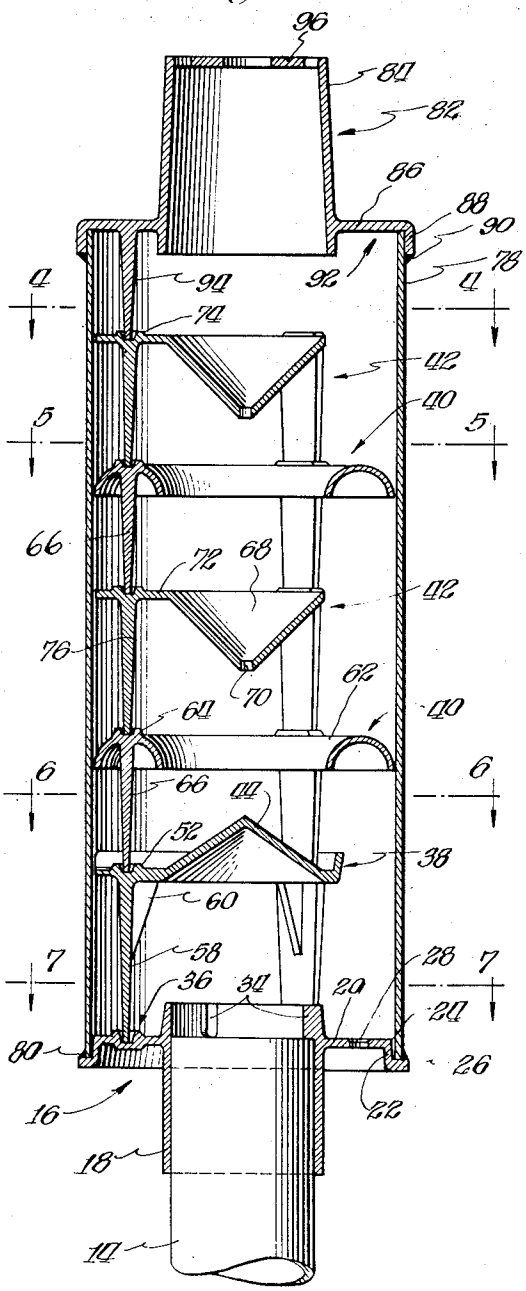

Inventor:
Cline Harry Harmon
By: Bair & Freeman
Atty's.

Sept. 9, 1952 C. H. HARMON 2,609,886

MUFFLER WITH CONCAVE BAFFLES

Filed July 3, 1948 2 SHEETS—SHEET 2

Fig. 4

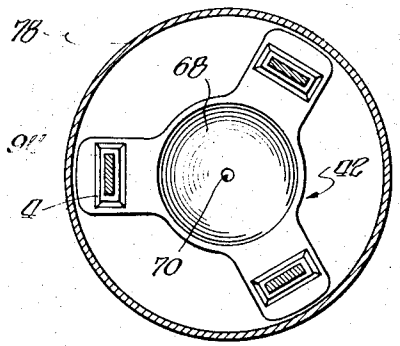

Fig. 5

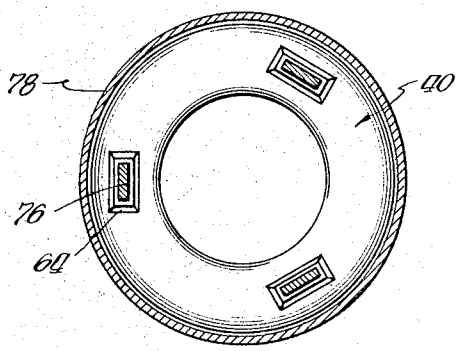

Fig. 6

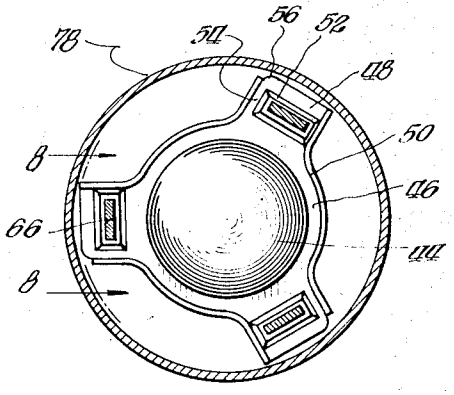

Fig. 7

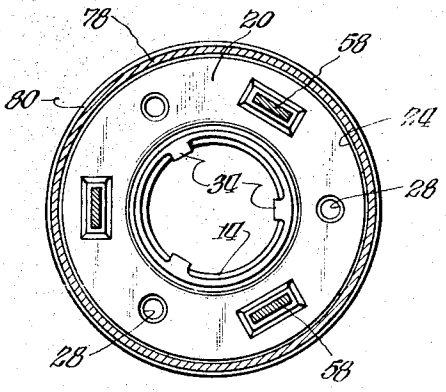

Fig. 8

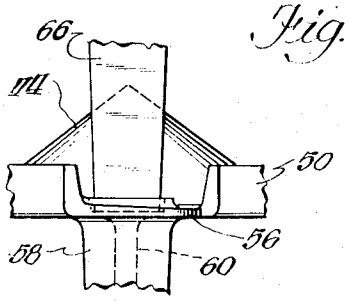

Inventor:
Cline Harry Harmon
By: Bair & Freeman
Atty's.

Patented Sept. 9, 1952 2,609,886

UNITED STATES PATENT OFFICE

2,609,886

MUFFLER WITH CONCAVE BAFFLES

Cline Harry Harmon, Waterloo, Iowa, assignor to Waterloo Foundry Company, Waterloo, Iowa, a copartnership

Application July 3, 1948, Serial No. 36,965

11 Claims. (Cl. 181—68)

1

This application is a continuation-in-part of my application, Serial No. 781,858, now abandoned, filed October 24, 1947, for Muffler for Gas Engine.

The present invention relates to a muffler for gas engines and is especially adaptable for use on a farm tractor. The muffler may be used as well on stationary engines, and engines of various types, such as gasoline engines, diesel engines, etc.

An object of the present invention is the provision of a muffler which is highly efficient in sound muffling operation.

Another object of the invention is the provision of such a muffler which is effective for arresting and extinguishing sparks present in exhaust gases flowing therethrough.

A further object of the invention is the provision of such a muffler which, when applied to a vertical exhaust pipe, prevents the entrance of rain and other foreign matter into the exhaust pipe. Most exhaust pipes on farm tractors are disposed vertically.

A still further object is the provision of such a muffler which is economical not only in the material and the manufacturing processes employed, but also in the assembly of the parts making up the muffler.

The chief effectiveness of the muffler is accomplished by the employment of a plurality of novel shape baffle members; the exhaust gases on flowing through the muffler impinge first on one baffle member and then successively on the remaining baffle members. Such impingement of the exhaust gases successively on the novel shape baffle members is highly efficient for muffling sound, and the impact on the baffle members of the material sustaining the sparks causes the material to be disintegrated and the sparks to be extinguished.

The particular construction involves annularly shaped baffle members spaced along the line of flow of gases through the muffler, and central baffle members and positioned substantially in alignment with the central open spaces formed by the annular baffle members.

Another object of the invention is the provision of such an arrangement of baffle members, as just referred to herein, wherein most of the central baffle members are arranged to deflect exhaust gases onto the annular baffle member, and vice versa.

Still another object is the provision of a muffler having an arrangement of baffle members, as referred to, in which at least one of the central

2

baffle members is arranged to deflect any rain which may fall into the muffler and cause it to drain laterally to the side and prevent it from falling onto the exhaust pipe.

With these and other objects in view, my invention consists in the construction, arrangement and combination of the various parts of my device whereby the objects contemplated are attained, as hereinafter more fully set forth, pointed out in my claims and illustrated in the accompanying drawings, wherein:

Figure 1 is a view illustrating the muffler of the present invention applied to a vertical exhaust pipe;

Figure 2 is an enlarged plan view of the muffler;

Figure 3 is a vertical sectional view taken on line 3—3 of Figure 2;

Figure 4 is a sectional view taken on line 4—4 of Figure 3;

Figure 5 is a sectional view taken on line 5—5 of Figure 3;

Figure 6 is a sectional view taken on line 6—6 of Figure 3;

Figure 7 is a sectional view taken on line 7—7 of Figure 3; and

Figure 8 is a detail view taken on line 8—8 of Figure 6.

Referring now in detail to the drawings, the muffler is shown as a whole at 12 applied to an exhaust pipe 14 of a tractor which in the present instance is a vertical exhaust pipe. The exhaust pipe 14 is intended to represent the exhaust pipe of a farm tractor which in most cases is arranged vertically, but it will be understood that the muffler can be used on stationary engines, and on exhaust pipes arranged in other positions. Reference to the various parts of the device is made according to the device being oriented with respect to a vertical exhaust pipe, but it will be understood that if it is used on an exhaust pipe in another position the references to the various parts can be interpreted accordingly.

The various parts of the muffler may be made of any desired heat resistant material. The muffler 12 is preferably of cylindrical shape although other cross sectional shapes may be employed. The muffler includes an element 16 which pursuant to its function in the muffler may be termed a bottom closure element. For purposes of interpreting the specification and claims, the bottom of the muffler, as illustrated in Figure 3, will be known as its inlet end, and the top as its outlet end. The element 16 includes a tubular element 18 defining an inlet passage through the bottom end of the muffler.

Extending outwardly from the tubular element 18 is a horizontal radial flange 20 having a down-turned axial flange 22 forming a shoulder 24 and an out-turned short radial flange 26 at the lower edge of the axial flange 22. A plurality of drain holes 28 are formed in the flange 20. The flange 20 is positioned below the top of the tubular element 18 with the result that a portion of the tubular element extends into the interior of the muffler, and the remainder and greater portion of the tubular element extends below and out of the muffler. Formed on the outer surface of the tubular element 18 are ribs 30 employed for strengthening purposes and on which are provided tapped holes for the insertion of set screws 32. The muffler is applied to the exhaust pipe 14 by sliding the tubular member 18 over the exhaust pipe. A plurality of projections or stops 34 are formed on the inner surface of the tubular element 18 adjacent the top thereof and these stops limit the extent to which the muffler can be slid over the exhaust pipe. The screws 32 can then be turned down on the exhaust pipe for securing the muffler thereto. Formed on the upper surface of the flange 20 on the element 18 are a plurality of circumferentially spaced depressions, or recesses, 36 (Figure 7) which for purposes of convenience are rectangular in shape. The purpose of these depressions will be referred to later.

A plurality of baffle members of different shapes are employed in the muffler. There are three different kinds and may be referred to by the numerals 38, 40 and 42.

The baffle member 38 includes a centrally positioned cone-shaped element 44 disposed with its apex directed upwardly, or toward the outlet end and with its concave side disposed toward the inlet end. Surrounding the base of the cone-shaped element 44 is a short, radial flange 46. Extending out from the flange 46 are a plurality of arms 48. A low upstanding wall or bead 50 effectively surrounds the flange 46 and the sides of the radial arms 48, but is actually composed of three separate elements. The outer ends of the radial arms 48 are open, i. e., there is no wall, such as 50, along the outer extremities of the arms. Formed on the upper surface of each of the radial arms 48 is a recess 52, which is rectangular, similarly to the recesses 36. Each of the recesses 52 is offset circumferentially with respect to the radial center of the respective arm toward that side which, as viewed from the outer end of the arm, is to the left of the observer. Figure 8 illustrates such positioning. Each arm 48 slopes slightly downwardly in an outward radial direction, and also slopes slightly to the right, as observed from the outer end of the arm (Figure 8). A channel 54 is formed between the recess 52 and one of the elements making up the bead 50 on each of the arms. The outer edge or terminal end of each arm 48 is cut back slightly as indicated at 56 at the outer end of the channel 54. The sloping arrangement of each arm 48 and the channel 54 permit drainage of water falling onto the baffle member 38, the water falling onto the flange 20, or flowing down the inner surface of the shell of the muffler.

Secured to or formed integral with the baffle member 38 are a plurality of circumferentially spaced legs 58 which may be strengthened with ribs, such as 60. For convenience, the legs 58 are rectangular in cross section and taper in a downward direction, if desired. The legs 58 rest in the recesses or depressions 36 on the flange 20 and

the baffle member 38 is thereby supported in the muffler in spaced relation from the bottom thereof. It may be pointed out here that the baffle member 38 is disposed next to the inlet end of the muffler.

The baffle member 38 is thus disposed axially centrally of the muffler and defines a space between itself and the side of the muffler which may be considered as an annular space broken only by the radial arms 48.

Disposed next above the baffle member 38 is one of the baffle members 40. The baffle member 40 includes an annular ring 62 having a concave surface directed downwardly, or toward the inlet end of the muffler. Formed on the upper surface of the baffle member 40 are a plurality of circumferentially spaced recesses or depressions 64 similar to the depressions 52 and 36. Formed on the under surface of the annular ring 62, i. e., extending downwardly from the concave surface therein are a plurality of circumferentially spaced legs 66 generally similar to the legs 58. The baffle member 40 is positioned in place with the legs 66 resting in the depressions 52 in the baffle member therebelow and the baffle member 40 is thereby spaced vertically above the next lower baffle member. The annular ring 62 in the baffle member 40 defines a central open area with which the baffle members 38 and 42 are in substantial alignment.

The baffle member 42 includes a central hollow cone-shaped element 68 disposed with its apex directed downwardly, or toward the inlet end of the muffler. A central aperture 70 is formed in the cone-shaped element 68. Extending outwardly from the base, or upper edge, of the cone-shaped element 68 are a plurality of radial arms 72 and formed in the upper surfaces of the arms 72 and recesses or depressions 74 similar to the depressions 64. Legs 76 extend downwardly from the arms 72 and rest in the depressions 64 in the baffle member therebelow. It will be noted here that the baffle member 42 defines a space therearound, similarly to the lowermost baffle member 38. Positioned above the baffle members thus described are successive baffle members 40 and 42 arranged alternately and the arrangement throughout the muffler of the baffle members is such that annular baffle members are disposed alternately with axially central baffle members, although the latter are of two different kinds. After the baffle members thus described are positioned in place, an outer tubular shell 78 is slid over the baffle members. The lower end of the shell 78 fits over the shoulder 24 on the bottom closure element 16 and welded thereto, as indicated at 80.

Closing the upper end of the muffler is a top closure element 82 which includes a tubular element 84 and a substantially flat horizontal flange 86 extending radially outwardly from the tubular element 84. On the outer edge of the flange 86 is a short axially extending flange 88, which fits over the upper end of the shell 78. The flange 88 is then welded to the shell 78, as indicated at 90. The flange 86 is disposed slightly above the lower end of the tubular element 84 so that a portion of the tubular element extends into the interior of the muffler and defines with the shell 78 an annular concave area 92. The area 92 is in substantial register with the annular rings 62 of the baffle members 40.

A plurality of circumferentially spaced legs 94 are secured to or formed integral with the radial flange 86 and extend downwardly down

into the recesses 74 in the uppermost baffle member 42. Thus, when the elements are secured together, as above described, the legs 94 secure all of the baffle members in substantially rigid clamped position in the muffler.

Formed in the upper end of the tubular member 84 is an open grill 96 having a plurality of open areas for the escape of exhaust gases. The grill 96 may be cast or formed integral with the tubular member 84.

As referred to herein, the tubular shell 78 and the closure elements 16 and 82 together form the housing of the muffler. The dimensions of the shell 78 and baffle members 40 are such that there is substantially no space between the shell 78 and the outer surface of said baffle members 40, and the passages through the baffle members 40 are essentially the central openings therein.

The baffle members are separate and detached from one another as well as from the shell 78 so that the various elements making up the muffler can be manufactured by the simplest and most economical methods. After the muffler is assembled, the various baffle members are secured therein in locked relation because of the legs thereon fitting in the depressions in the baffle members below. The leg and depression feature, in addition to establishing a locking feature, permits expansion between the baffle members.

Exhaust gases emerging from the exhaust pipe 14 enter into the muffler and first impinge on the lowermost baffle member 38, which is disposed substantially centrally of the muffler and over the open end of the exhaust pipe. The gases on striking this baffle member are baffled outwardly against the inner surface of the shell 78 and they then impinge on the lower concave surface of the annular baffle member 40 next adjacent above. Since there is substantially no clearance between the baffle member 40 and the shell 78, the exhaust gases are baffled inwardly and they pass upwardly through the central open space therein. After the gases pass upwardly through the first baffle member 40, they strike the cone-shaped element 68 of the baffle member above and are deflected thereby outwardly and upwardly to the next baffle member thereabove. This process is repeated in connection with successive baffle members and when the gases are baffled past the uppermost baffle member 42, they pass outwardly and impinge on the lower concave surface 92 on the horizontal flange 86. This concave surface 92 also acts as a baffle member similarly to the annular baffle members 40.

The two baffle members 40 and 42 next above the bottom baffle member 38 constitute a set, and the top two baffle members 40 and 42 constitute another set identical with the first. The design of the muffler is thus such that only one such set may be included in a muffler with the bottom baffle member 38 if the muffler is intended to be used with a small capacity engine, the housing then being made of appropriate size. Accordingly, two sets are employed in a larger muffler, and more for an even larger muffler.

The different types of baffle members cooperate with each other so that there is no continuous by-pass spaces through the muffler wherein gases might flow without being baffled by the various baffle members. The repeated change in direction of travel of the exhaust gases travelling through the muffler renders the muffler efficient in deadening sound.

The impinging of the exhaust gases on the successive baffle members is effective for extinguishing any sparks which are carried by the exhaust gases. Escaping sparks have long been known to be dangerous and the present device is exceedingly effective for arresting and extinguishing the sparks.

The open space in the grill 96 is substantially equal to the normal cross sectional area of the exhaust pipe 14 to which the muffler is applied. Thus, there is no excessive pressure built up in the muffler.

The grill 96 prevents objects from falling into the muffler and in the case of rain, the rain drops falling on the grill 96 tend to splash and be deflected and prevented from entering into the muffler.

The device is effective for preventing any rain which does enter the muffler from entering into the exhaust pipe 14. The shape of the cone-shaped elements 68 is such that the rain is channeled through the apertures 70 and finally down onto the bottom baffle member 38. The cone-shaped member 44 in the baffle member 38 directs the water outwardly and the water runs outwardly on the radial arms 48 and due to the slope of the arms 48, as above described, the water runs through the channels 54 and drops down onto the flange 20 in the bottom closure member 16, or flows down the surface of the shell 78. The water then flows out through the drain openings 28.

It will be noted that the parts making up the muffler are simple in design. The closure elements 16 and 82, as well as the various baffle members may be castings. The tubular shell 78 can be secured as stock material. The device is therefore economical, both in materials used and methods of manufacture. In addition, the assembly of the device is simple and can be easily and quickly accomplished.

While I have herein shown and described a preferred embodiment of my invention, manifestly it is susceptible of modification and rearrangement of the parts without departing from the spirit and scope thereof. I do not therefore wish to be understood as limiting my invention to the precise form herein disclosed, except as I may be so limited by the appended claims.

I claim as my invention:

1. A muffler for an exhaust pipe comprising, in combination, a tubular housing having passages through its ends, the housing being adapted for connection with an exhaust pipe in communication with one of said passages, and a plurality of baffle members secured in said housing in axially spaced relation therein, alternate ones of said baffle members being annular in shape and having downwardly facing concave surfaces directed toward the exhaust pipe, said annular baffle members defining central open areas, and the remaining ones of said baffle members having solid portions substantially centrally disposed and defining substantially open annular spaces between themselves and the housing, said solid portions being in axial alignment with said central open areas.

2. A muffler for an exhaust pipe comprising a housing having an inlet and outlet end, a closure member for said inlet end, said closure member having an inlet opening therethrough for communication and connection with the exhaust pipe, a plurality of baffle members secured in the housing in spaced relation longitudinally of the housing, alternate ones of said baffle members being annular and defining central open spaces

and having concave surfaces directed toward the exhaust pipe, the remaining ones of said baffle members having substantially solid portions in alignment with said central open spaces and defining substantially open annular spaces between themselves and the housing, and a closure member for the outlet end of the housing having a central outlet opening therein and an annular closed portion having a concave surface directed toward the exhaust pipe.

3. A muffler for an exhaust pipe, comprising in combination, a housing having an inlet and outlet end and passages through said ends, a plurality of annular baffle members defining central open areas secured in said housing in spaced relation longitudinally therein, said annular baffle members having concave surfaces directed toward said inlet end, and an axially central baffle member having a solid portion in line with said central open areas and defining a substantially annular space between itself and the housing, said central baffle member being disposed between said inlet end and the next adjacent annular baffle member and having a concave surface directed toward said inlet end.

4. A muffler for an exhaust pipe, comprising in combination, a housing having an inlet and outlet end and passages through said ends, a plurality of annular baffle members defining central open areas secured in said housing in spaced relation longitudinally therein, said annular baffle members having downwardly facing concave surfaces directed toward said inlet end and a plurality of axially central baffle members having substantially solid portions in line with said central open areas and defining substantially annular spaces between themselves and the housing, said central baffle members being alternately positioned with respect to said annular baffle members.

5. A muffler for an exhaust pipe, comprising in combination, a housing having an inlet and outlet end and passages through said ends, a plurality of annular baffle members defining central open areas secured in said housing in spaced relation longitudinally therein, the annular portions of said annular baffle members having downwardly facing concave surfaces directed toward said inlet end and a plurality of axially central baffle members having substantially solid portions in line with said central open areas and defining spaces between themselves and the housing, said central baffle members being disposed alternately with respect to said annular baffle members, said central baffle members having concave surfaces directed toward said outlet end.

6. A muffler for an exhaust pipe, comprising in combination, a housing having an inlet and outlet end and passages through said ends, a plurality of annular baffle members defining central open areas secured in said housing in spaced relation longitudinally therein, said annular baffle members having concave surfaces directed toward said inlet end, and a plurality of axially central baffle members positioned alternately with respect to said annular baffle members, said central baffle members having substantially solid portions defining spaces between themselves and the housing, one of said central baffle members being positioned between said inlet end and the next adjacent annular baffle member and having a concave surface directed toward said inlet end, and the remaining central baffle members having concave surfaces directed toward said outlet end and having central apertures therein.

7. In a muffler for an exhaust pipe, the combination comprising, a housing having an inlet end and an outlet end and passages through said ends, a plurality of annular baffle members mounted in said housing in spaced relation longitudinally therein, a plurality of axially central baffle members mounted in said housing in alternate positions with respect to said annular baffle members, one of said central baffle members being disposed next adjacent said inlet end and being cone shape with its apex directed toward said outlet end, radial arms extending outwardly and slightly downwardly from said one central baffle member, an upstanding wall surrounding the sides of said one central baffle member and the radial arms thereon, the outer ends of said radial arms being open, the remaining central baffle members being hollow, cone shape with their apexes directed toward said inlet end and having central apertures therethrough.

8. A muffler for connection to a vertical exhaust pipe comprising, in combination, a housing having a bottom closure member, a tubular element extending through and terminating above said bottom closure member, said tubular element being adapted for attachment to an exhaust pipe, said bottom closure member having a drain opening therein, a baffle member adjacent said bottom closure member, said baffle member having a central hollow, cone shape portion disposed with its concave side directed downwardly, a plurality of radial arms extending outwardly from said cone shape portion, an upstanding wall surrounding said cone shape portion and the sides of said radial arms, the outer ends of said radial arms being open, and a plurality of additional baffle members having successively staggered solid and open portions, and a top closure member secured to the housing and having an opening therethrough.

9. In a muffler, the combination comprising, a bottom closure member with a passage therethrough, a tubular shell secured to said closure member, a plurality of annular baffle members in said shell, the annular portions of said annular baffle members having a plurality of circumferentially spaced downwardly extending legs and a plurality of circumferentially spaced depressions in their upper surface, and a plurality of baffle members each having a central substantially solid portion and radially extending arms, said arms having downwardly extending legs and having depressions in their upper surface, said second baffle members being alternately arranged with respect to said annular baffle members, said legs supporting said baffle members in stacked spaced relation vertically in the muffler, said legs resting in said depressions in said bottom closure member and the other baffle members respectively, and a top closure member with a passage therethrough secured to said tubular shell, said top closure member having a plurality of circumferentially spaced legs in engagement with the top one of said baffle members and resting in the depressions therein.

10. A muffler for connection to a vertical exhaust pipe comprising, in combination, a housing having a bottom end member, a tubular element extending through and terminating above said bottom end member, said tubular element being adapted for attachment to an exhaust pipe, said bottom end member having a drain opening therein, a baffle member adjacent said bottom end member, said baffle member having a central hollow, cone shape portion disposed with its con-

cave side directed downwardly, a plurality of radial arms extending outwardly from said cone shape portion, an upstanding wall surrounding said cone shape portion and the sides of said radial arms, the outer ends of said radial arms being open, and the top of said housing having an opening therethrough for the escape of exhaust gases.

11. A muffler for connection to a vertical exhaust pipe comprising, in combination, a housing having a bottom end member, a tubular element extending through and terminating above said bottom end member, said tubular element being adapted for attachment to an exhaust pipe, said bottom end member having a drain opening therein, a baffle member adjacent said bottom end member, said baffle member having a central hollow, cone shape portion disposed with its concave side directed downwardly, said cone shape portion being imperforate, a plurality of radial arms extending outwardly from said cone shape portion, an upstanding wall surrounding a substantial portion of said cone shape portion, said wall having openings therethrough at positions disposed radially outwardly beyond said tubular member, and the top of said housing having an opening therethrough for the escape of exhaust gases.

CLINE HARRY HARMON.

REFERENCES CITED

The following references are of record in the file of this patent:

UNITED STATES PATENTS

Number	Name	Date
624,062	Mattews et al.	May 2, 1899
737,443	Mooers	Aug. 25, 1903
981,584	Miller	Jan. 10, 1911
992,839	Wolle et al.	May 23, 1911
1,020,163	Swain	Mar. 12, 1912
1,045,936	Bivert	Dec. 3, 1912
1,084,883	Holzwarth	Jan. 20, 1914
1,087,468	Steinmetz	Feb. 17, 1914
1,148,900	Hunt	Aug. 3, 1915
1,833,256	Miner	Nov. 23, 1931
2,045,135	Hanson	June 23, 1936
2,485,555	Bester	Oct. 25, 1949

FOREIGN PATENTS

Number	Country	Date
23,615	Great Britain	Jan. 11, 1896
364,222	Great Britain	Jan. 7, 1932