Dec. 16, 1969 J. P. HOLLAND 3,484,812

MEANS FOR LIMITING AXIAL MOVEMENT IN A HINGE HANGER ASSEMBLY

Filed Nov. 1, 1968 2 Sheets-Sheet 1

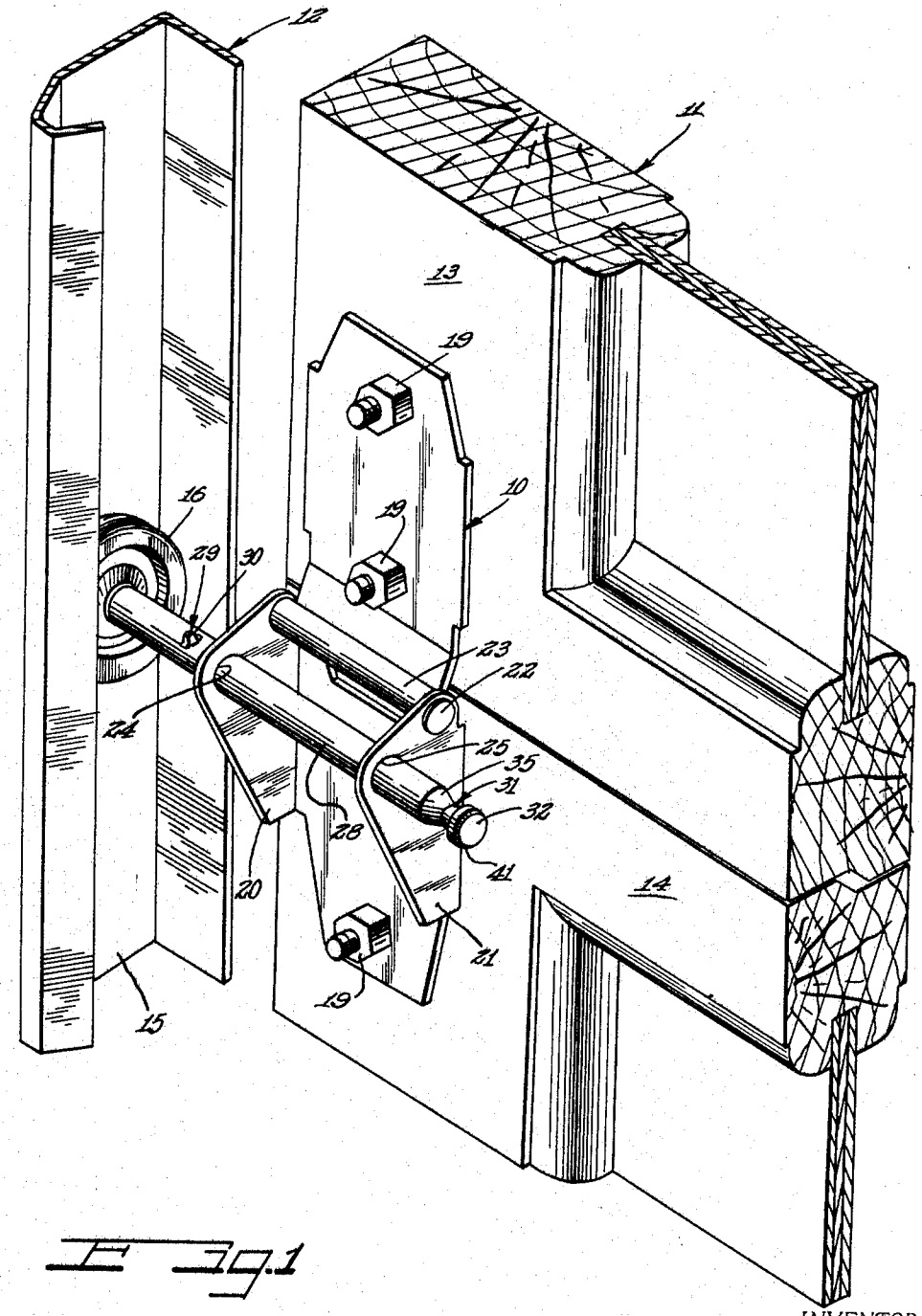

Fig. 1

INVENTOR.

John P. Holland

BY Hill, Sherman, Meroni, Gross & Simpson ATTORNEYS

MEANS FOR LIMITING AXIAL MOVEMENT IN A HINGE HANGER ASSEMBLY

Filed Nov. 1, 1968 2 Sheets-Sheet 2

Fig. 2

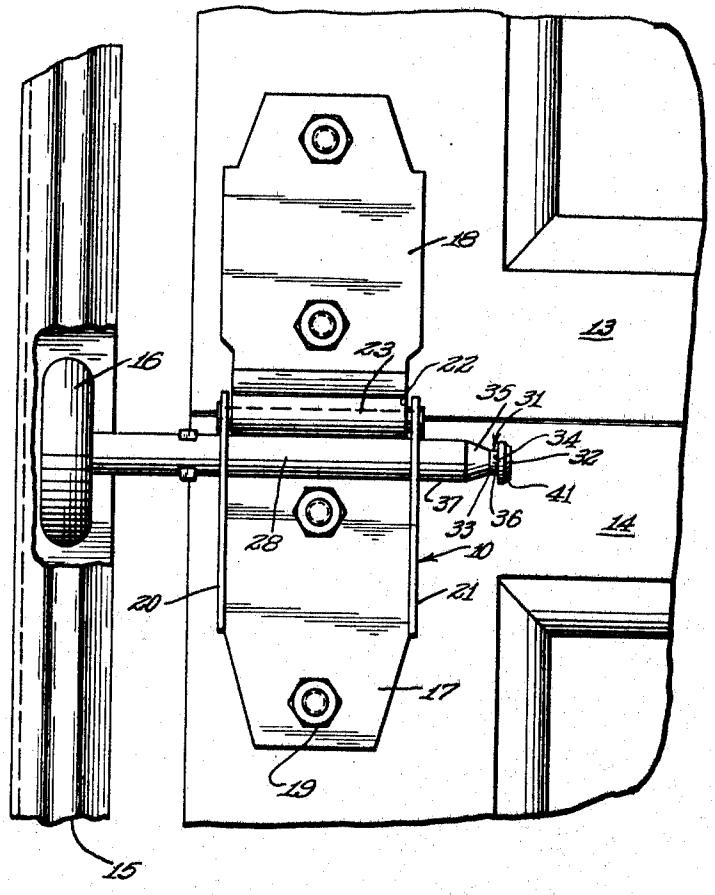

Fig. 3

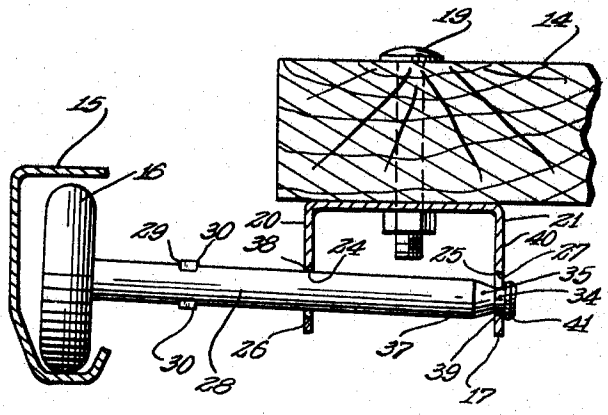

INVENTOR.

John P. Holland

BY Hill, Sherman, Meroni, Gross & Simpson ATTORNEYS

United States Patent Office

3,484,812

Patented Dec. 16, 1969

1

3,484,812

MEANS FOR LIMITING AXIAL MOVEMENT IN A HINGE HANGER ASSEMBLY

John P. Holland, Sterling, Ill., assignor to Frantz Manufacturing Company, Sterling, Ill., a corporation of Illinois

Filed Nov. 1, 1968, Ser. No. 772,627
Int. Cl. E05d *15/38*
U.S. Cl. 160—201 7 Claims

ABSTRACT OF THE DISCLOSURE

A roller shaft for a roller hinge assembly which is adapted to support and guide a door in the track of an overhead door installation having a groove to define an annular shoulder which prevents the removal of the shaft from the hinge assembly when the shaft is canted in the bearing surfaces of the hinge assembly by the weight of the door, but which enables the removal of the shaft from the bearing surfaces of the assembly when the axis of the shaft coincides with the axis of the bearing surfaces.

BACKGROUND OF THE INVENTION

Field of the invention

This invention pertains to the shaft having means to limit axial movement and particularly adapted for supporting a roller of a roller hinge assembly of an overhead door installation.

Prior art

In an overhead door installation, a door composed of a plurality of panels interconnected by hinges is supported and guided by a track system comprising a pair of tracks having vertical sections disposed adjacent the opening of which the door is closing, and horizontal sections or portions, which are connected to the vertical sections by a curved section for supporting the door in a retracted position. The door is supported and guided by the track system by use of a plurality of rollers which are mounted in brackets which usually are part of the hinge holding the door panels together. To prevent binding of the door in the track system, the shafts supporting the rollers are free to move axially with respect to their brackets so that the door may move laterally with respect to the track system to adjust for any misalignment of the installation. Due to misalignments particularly in the horizontal sections of the track system, the amount of lateral movement of the door may exceed the length of the shaft so that the shaft may be accidently removed from the bracket causing a malfunction of the door installation. One solution to the above problem is the provision of a separate fastening or retaining means such as a snap ring or a cotter pin which limits the amount of relative axial movement between the shaft and the mounting bracket. The use of a separate retaining means has the disadvantages of requiring additional time in the installation of the overhead door system or installation, of failing due to wear during use of the door installation and of increasing the time for removing the roller shafts from the mounting brackets during any repairing operation of the door installation.

SUMMARY OF THE INVENTION

The present invention provides a roller shaft having integral means such as an annular shoulder which allows rapid assembly and/or disassembly of the roller shaft with the mounting bracket and prevents the inadvertent disassembly of the roller shaft from the mounting bracket when the shaft is supporting a load such as the overhead door.

2

AS SHOWN ON THE DRAWINGS

FIG. 1 is an isometric view of the mounting bracket and hinge assembly mounting a broken-away portion of an overhead door to a section of the track system.

FIG. 2 is a plan view of the mounting bracket with portions of the door and track system broken away.

FIG. 3 is a cross sectional view of the mounting bracket with portions in elevation for purposes of illustration.

DESCRIPTION OF THE PREFERRED EMBODIMENT

The principles of the present invention are best illustrated by a hinge assembly and mounting bracket generally indicated at **10** which is supporting and guiding a door generally indicated at **11** of an overhead door assembly in a track system generally indicated at **12**. The door **11** comprises panels such as **13** and **14** which are interconnected by the hinge and mounting bracket assembly **10**. The track system **12** comprises a vertical section and horizontal section interconnected by a curve section which is disposed on each side of the opening being closed by the door **11**. The track system **12** is formed of a metal member **15** which is bent to provide a guide path for the roller **16** which guides and supports the door **11**.

The hinge and bracket assembly **10** comprises a bracket portion **17** and a second portion **18** which are attached to their respective panels **14** and **13** by fastening means such as bolts **19**. The bracket portion **17** has upstanding sides **20** and **21** which are provided with a pair of aligned apertures receiving a hinge pintle **22** of which a knuckle **23** of the second portion **18** is wrapped around to interconnect the two portions together to form the hinge assembly **10**.

The upstanding sides **20** and **21** are each provided with an aperture **24** and **25** respectively which are axially aligned to provide axially aligned and spaced circular bearing surfaces **26** and **27** respectively (FIG. 3) for receiving a shaft **28** on which the roller **16** is axially fixedly but rotatably mounted at one end. The shaft **28** is provided with a positive stop means **29** which, as best illustrated in FIG. 3, comprises a pair of radially extended abutments **30, 30**, which are projections formed by crimping opposite sides of the shaft **28** for limiting the relative axial movement of the roller **16** toward the side flange **20**.

To limit the relative axial movement of the roller **16** away from the bracket portion **17**, the shaft **28** is provided with means generally indicated at **31** which is integral with the shaft. In the preferred embodiment, as best illustrated in FIG. 2, the means **31** is provided adjacent a free end **32** of the shaft **28** and comprises an annular groove **33** having side walls **34** and **35** and a bottom **36**. The side wall **34** forms an annular shoulder having an outer diameter that is substantially the same as the diameter of the outer surface **37** of the intermediate portion of the shaft. The side wall **35** has a co-axial frusto-conical configuration and provides a tapered lead-in surface between the outer surface **37** of the shaft and the bottom **36** of the groove **33**.

As best illustrated in FIG. 3, the outer surface **37** of the shaft **26** has a loose fit in the annular bearing surfaces **26** and **27** formed by the apertures **24** and **25**. As the assembly **10** supports the weight of the door by transferring the door's weight to the truck system **12**, the shaft **28** is slightly canted so that, as illustrated in FIG. 3, it engages the bearing surface **27** formed by the aperture **25** at a point **39** which is diametrically opposite the point **38**. As the roller **16** moves away from the bracket **17**, the shaft **28** moves in a relative axial direction with the bracket **17** until the point of contact **39** of the bearing **27** moves

along the lead-in surface **35** into contact with the bottom **36** of the groove **33**. Further axial movement is prevented by the shoulder or side wall **34** engaging a peripheral portion of the surface **40** of the upstanding side **21** that is adjacent the aperture **25**. The point of contact **39** is forced into engagement or contact with the bottom **36** of the groove **33** by the same forces which cause the canting or cocking of the shaft **28** in its contact with the apertures **24** and **25** as it supports a load.

As the roller **16** and the door **11** move relatively toward one another, the point of contact **39** rides up the lead-in surface **35** to enable the shaft outer surface **37** of the intermediate portion to become reengaged with the bearing **27**. If the groove **33** had a side wall **35** which was parallel to the side wall **34**, the point of contact **39**, once it was received in the groove **33**, would be retained in the position illustrated in FIG. 3, until some external force were applied to enable the shaft **28** to move relative to the bracket **17** to a position such as illustrated in FIG. 2.

Since the outer diameter of the shoulder formed by the side wall **34** of the groove **33** does not exceed or is substantially the same as the diameter of the surface **37** of the shaft **28**, the shaft **28** can be easily removed from the bracket portion **17** by removing the weight of the door **11** and aligning the axis of the shaft to be substantially coincidental with the axis of the spaced apertures **24** and **25**. When the shaft **28** is aligned with the apertures **24** and **25**, the shaft can be easily removed from the bracket portion **19** during a disassembly operation and can be easily inserted through the apertures **24** and **25** during an assembly operation. To facilitate the insertion, the free end **32** of the shaft **28** may be provided with a chamber or circular bevel **41**.

As illustrated, the assembly **10** is attached to the left-hand side of the door **11** to cooperate with the left side track of the track system **12** and is viewed from inside of the building looking at the back side of the door. The hinge assembly **10** can be readily utilized on the right-hand side of the panel with the only variation being that the shaft **28** would be inserted into the bracket through the aperture **25** and then through the aperture **24** instead of first being inserted through the aperture **24** and then the aperture **25** as illustrated. The assembly **10** provides a flexibility so that the assembly **10** can be utilized either on the left- or right-hand side of the door **11**. Another advantage of the assembly **10** is that the roller and shaft **28** can be packaged as one unit and the hinge assembly **10** can be packaged as another unit and both can be shipped individually with a savings in space over a hinge assembly in which the roller shaft and bracket are assembled and shipped together.

Although minor modifications might be suggested by those skilled in the art, it should be understood that I wish to employ within the scope of the patent warranted hereon all such modifications as reasonably and properly come within the scope of my contribution to the art.

I claim as my invention:

1. A roller shaft adapted to be supported in a pair of axially spaced bearings formed by apertures in upstanding sides of a mounting bracket, said roller shaft comprising a shaft having a roller fixedly attached axially to one end thereof for rolling engagement on a track and means integral with said shaft providing limited relative axial movement of said shaft and roller as a unit to insure a supporting relationship between said shaft and said bearings while said shaft is supporting a load and enabling ready insertion of said shaft into said bearings and removal therefrom while said shaft is in an unloaded condition.

2. A roller shaft according to claim **1**, wherein said means comprises an annular shoulder on said shaft having an outer diameter less than the diameter of the bearing surface of each of the bearings.

3. A roller shaft according to claim **2**, wherein said shoulder is disposed on the end of said shaft opposite said roller whereby the maximum axial distance between the roller and the bearings is limited by said shoulder.

4. A roller shaft according to claim **2**, wherein said shoulder is defined by a side wall of an annular groove on said shaft.

5. A roller shaft according to claim **4**, wherein said annular groove has an opposite side wall defining a tapered lead-in surface enabling a bearing surface disposed in said groove to move axially away from said shoulder onto the major surface of said shaft.

6. In an overhead door assembly including a bracket carried by the door and providing spaced, axially aligned circular bearing surfaces, a shaft having an intermediate cylindrical portion freely extending through and mounted in said bearing surfaces and having a free end therebeyond, a roller fixedly axially but rotatably carried by the other end of said shaft, a track supporting said roller for movement thereover when said shaft and bracket are in door-carrying, load-bearing relationship, the improvement which comprises providing as said shaft,

a shaft having at its free end an annular shoulder freely passable through the openings provided by said circular bearing surfaces to permit ready axial insertion of said shaft into and withdrawal from supported relationship by said surfaces, said shaft having an annular groove inwardly of said annular shoulder, and said groove presenting a co-axial frusto-conical surface tapered radially inwardly toward said annular shoulder,

whereby if the roller end of said shaft is caused to move sufficiently outwardly of said bearing surfaces while the shaft is under load said frusto-conical surface will cause said shaft to assume a canted position and be prevented from further outward movement solely by engagement of said annular shoulder with the peripheral edge of the adjacent one of said bearing surfaces.

7. A roller assembly adapted to support a door on a track system, comprising

a mounting bracket having a pair of upstanding sides, each of said sides having apertures to provide a pair of axially aligned bearing surfaces; and

a shaft disposed in said pair of bearing surfaces for axial and rotational movement, said shaft having a roller axially fixedly but rotatably mounted at one end, and having an annular shoulder having an outer diameter such as to enable insertion and removal of the shaft when the axis of the shaft coincides with the axis of said pair of axially aligned bearing surfaces, and said shoulder having adjacent thereto an annular groove of less diameter limiting the axial movement of the shaft in said bearing surfaces when the adjacent bearing surface to said groove comes into bearing contact with the wall of said groove and said axis of said shaft is canted with respect to the axis of said bearing surfaces.

References Cited

UNITED STATES PATENTS

1,974,147	9/1934	Bittorf	16—104
2,039,296	5/1936	Collins	160—191
2,070,557	2/1937	Bartel	16—104 X
2,072,514	3/1937	Daniell	160—209
2,266,042	12/1941	Hufferd et al.	16—137
2,442,309	5/1948	Norberg	160—193
2,624,065	1/1953	Moler.	
3,361,489	1/1968	Gionet	16—97

DENNIS L. TAYLOR, Primary Examiner

U.S. Cl. X.R.

16—97