(12) UK Patent (19) GB (11) 2 226 936 (13) B

(54) Title of Invention

Method and apparatus for implementing adaptive forward differencing using integer arithmetic

(51) INT CL[5]; G06F 3/153

(21) Application No
8919266.0

(22) Date of filing
24.08.1989

(30) Priority Data

(31) 295117

(32) 09.01.1989

(33) US

(43) Application published
11.07.1990

(45) Patent published
22.09.1993

(72) Inventor(s)
Sheue-Ling Lien Chang

(73) Proprietor(s)
Sun Microsystems Inc

(Incorporated in USA - Delaware)

2550 Garcia Avenue
Mountain View
California 94043
United States of America

(74) Agent and/or
Address for Service
Potts, Kerr & Co
15 Hamilton Square
Birkenhead
Merseyside
L41 6BR
United Kingdom

(52) Domestic classification
(Edition L)
H4T TBBD

(56) Documents cited
None

(58) Field of search

As for published application 2226936 A *viz:*
UK CL(Edition J) H4T TBBA TBBX TBEE TBEX
INT CL[4] G06F
Online databases: INSPEC, WPI
updated as appropriate

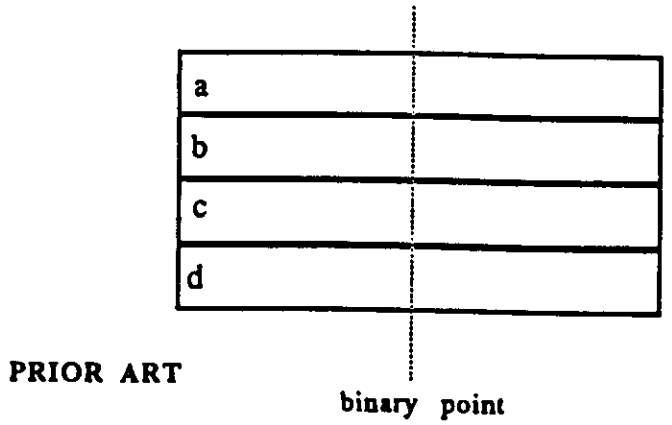

Fig 1

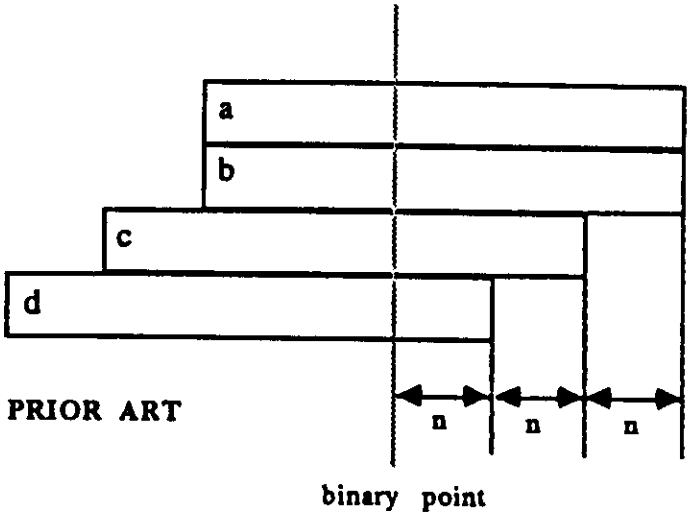

Fig 2

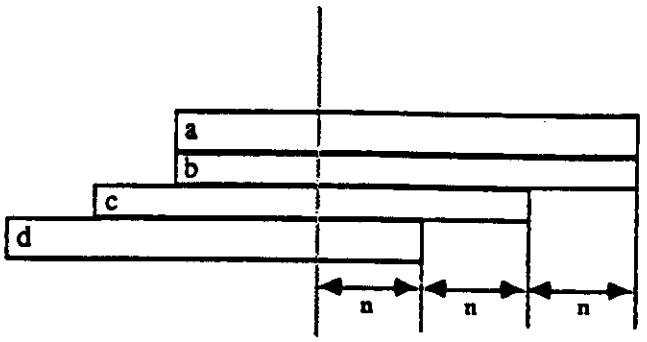
a
b
c
d
n
n
n
binary point

Fig 3a

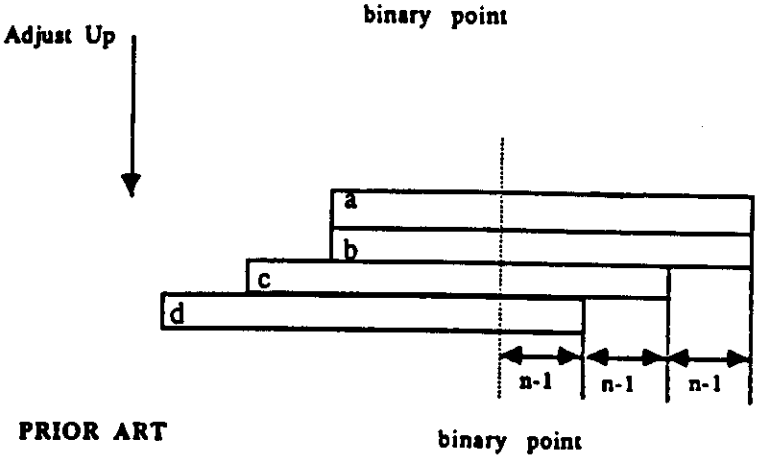
Adjust Up
a
b
c
d
n-1
n-1
n-1
PRIOR ART
binary point

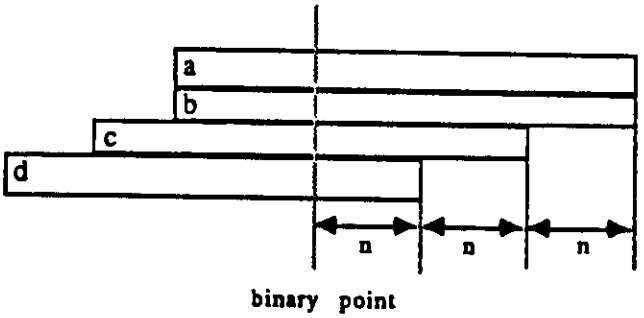
a
b
c
d
n
n
n
binary point

Fig 3b

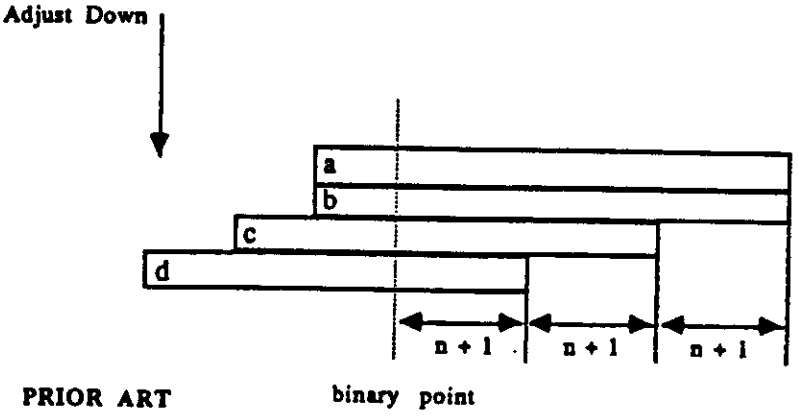
Adjust Down
a
b
c
d
n + 1
n + 1
n + 1
PRIOR ART
binary point

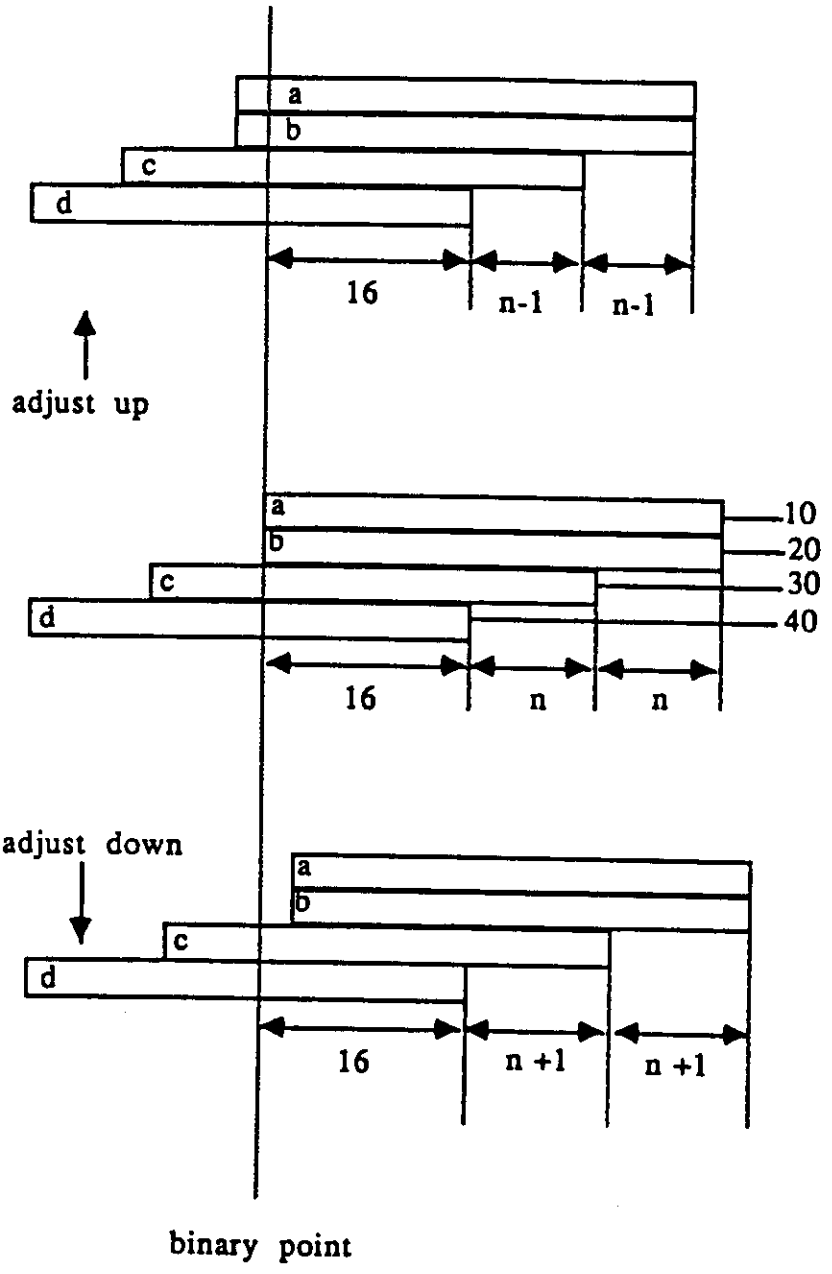

Fig. 4a

Fig. 4b

Fig. 4c

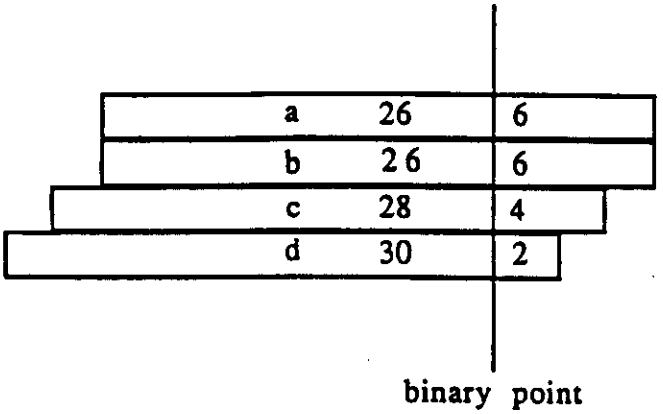
a 26 6
b 26 6
c 28 4
d 30 2
binary point

Fig. 5a

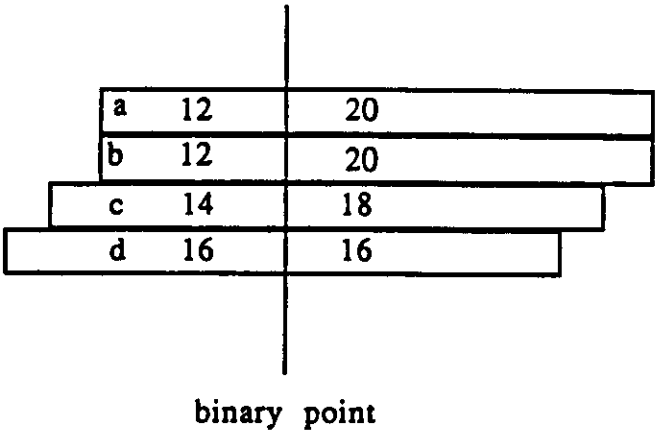
a 12 20
b 12 20
c 14 18
d 16 16
binary point

Fig. 5b

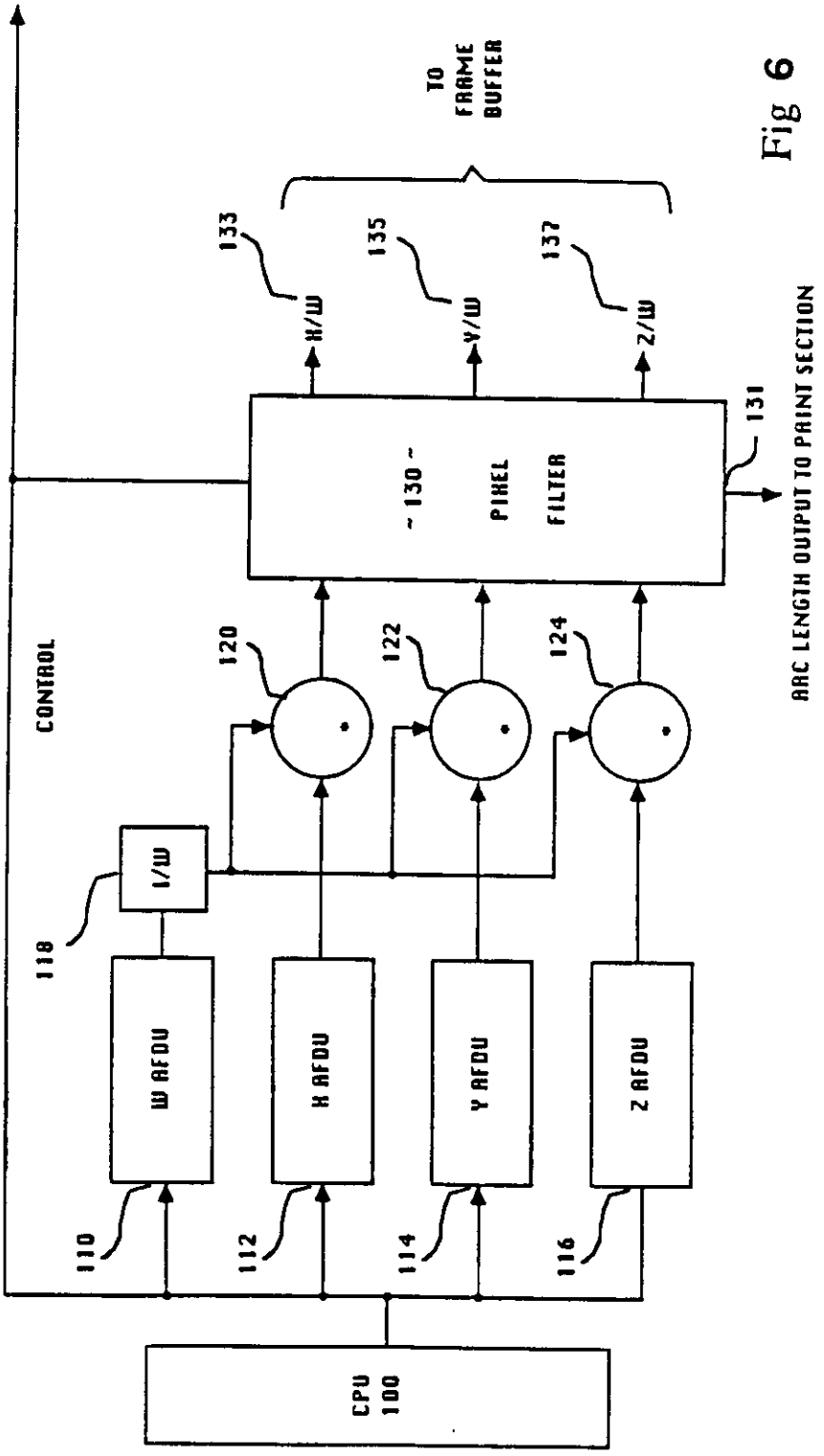
CPU
100
W AFDU
H AFDU
Y AFDU
Z AFDU
110
112
114
116
1/W
118
CONTROL
120
122
124
- 130 -
PIXEL
FILTER
131
ARC LENGTH OUTPUT TO PAINT SECTION
H/W
Y/W
Z/W
133
135
137
TO
FRAME
BUFFER

Fig 6

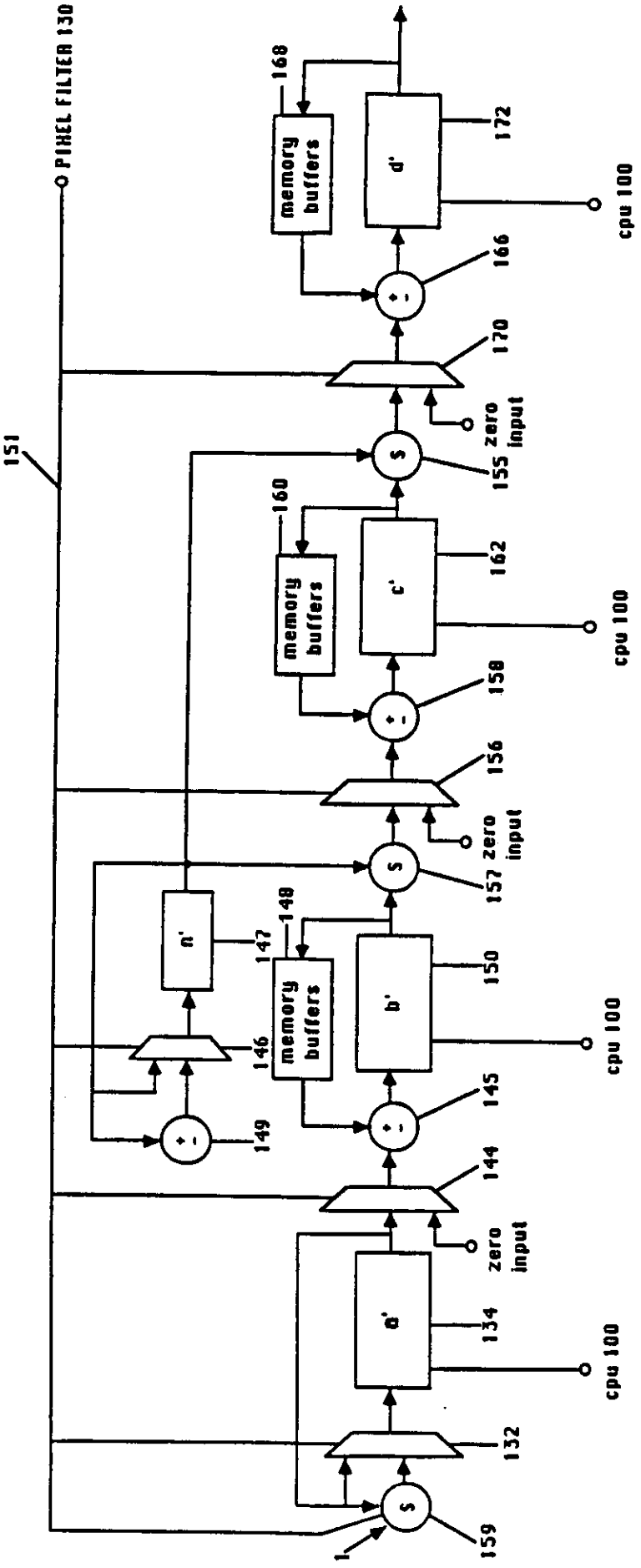
PIXEL FILTER 130
151
168
memory buffers
d'
172
cpu 100
166
170
zero input
155
160
memory buffers
c'
162
cpu 100
158
156
zero input
157
148
n'
147
memory buffers
b'
150
cpu 100
146
149
145
144
zero input
a'
134
cpu 100
132
159
1

Fig 7

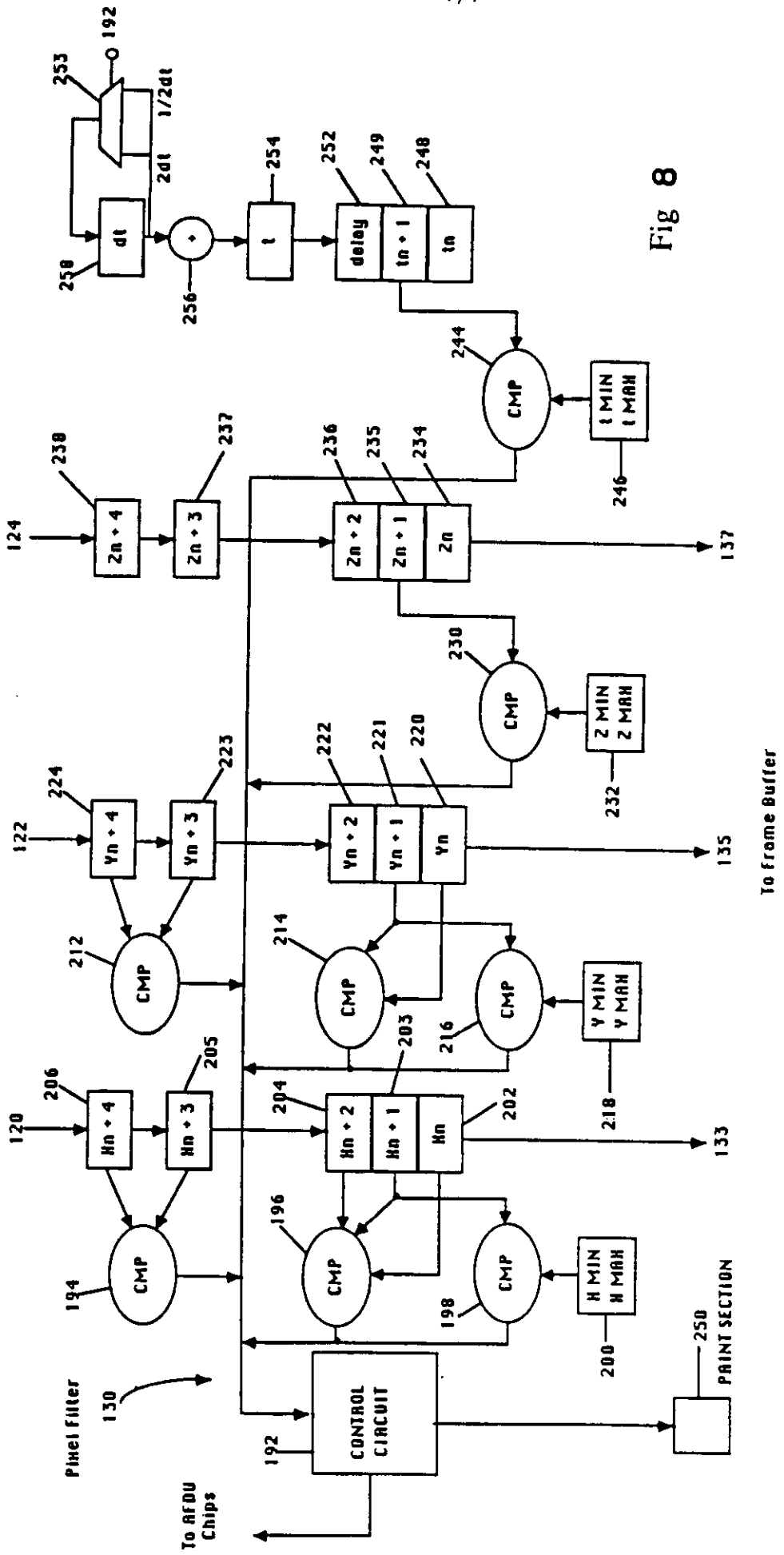
253
192
1/2dt
2dt
dt
258
256
254
252
249
248
delay
tn + 1
tn
244
CMP
t MIN
t MAX
246
238
237
236
235
234
124
Zn + 4
Zn + 3
Zn + 2
Zn + 1
Zn
137
230
CMP
Z MIN
Z MAX
232
224
223
222
221
220
122
Yn + 4
Yn + 3
Yn + 2
Yn + 1
Yn
135
212
CMP
214
CMP
CMP
216
Y MIN
Y MAX
218
206
205
204
203
202
120
Hn + 4
Hn + 3
Hn + 2
Hn + 1
Hn
133
194
CMP
196
CMP
CMP
198
H MIN
H MAX
200
Pixel Filter
130
CONTROL CIRCUIT
192
To AFDU Chips
250
PAINT SECTION
To Frame Buffer

Fig 8

METHOD AND APPARATUS FOR IMPLEMENTING ADAPTIVE FORWARD DIFFERENCING USING INTEGER ARITHMETIC

BACKGROUND OF THE INVENTION

1. FIELD OF THE INVENTION:

The present invention relates to methods and apparatus for evaluating a parametric function. More particularly, the present invention relates to methods and apparatus for the accurate rendering of higher order curves and curved surfaces represented by parametric functions on a CRT or other display.

2. ART BACKGROUND:

An effective way to represent curves and curved surfaces is through the use of parametric functions. Parametric functions are used in many applications areas such as seismic-geological and computer graphics.

In the computer graphics area, parametric curves and curved surfaces are common functions which are used in the computer generation of surfaces and objects on a display such as, for example, in mechanical computer aided design ("MCAD") applications. Since high speed hardware designed for rendering curved lines and curved surfaces is usually done by subdividing and rendering them on a CRT as a plurality of straight-lines or planar polygons. One method of tessellating a curve or a curved surface into line segments or planar polygons is by using the technique of forward differencing. The x, y, and z coordinates of a curve are defined by three parametric functions of the form $f(t) = At^3 + Bt^2 + Ct + D$. In the forward differencing technique, the end points of the line segments which reside on the curve are determined by calculating the values of the parametric functions in constant parametric increments. In each cycle, the value of a function can be

derived incrementally from the previous cycle by three additions performed using the coefficients of the forward difference basis representing the curve (a, b, c, d). The registers representing the storage of the coefficients, i.e., the a, b, c, and d registers, are illustrated in Fig. 1. (For further information on forward differencing, see Foley and Van Dam, Fundamentals of Interactive Computer Graphics, Addison Wesley, Reading MA, pp. 531-536).

Bartels, Splines for use in Computer Graphics and Geometric Modeling describes an improved method of implementing forward differencing technique using fixed point arithmetic for rendering parametric curves.

In the Bartels method, successive "guard bits" are identified in the forward difference registers containing the values of the coefficients of the curve represented in forward difference basis. The guard bits are identified as a predetermined number of least significant bits in the forward difference register. Referring to Fig. 2, for processing curves up to 2^n forward steps, n guard bits are used in the b, c, d forward difference registers successively. A forward step operation is performed with "n" guard bits truncated before adding a register to the adjacent register as illustrated by the following forward difference matrix and resulting equations.

$$\begin{bmatrix} d \\ c \\ b \\ a \end{bmatrix} \quad \begin{bmatrix} 1 & 2^{-n} & 0 & 0 \\ 0 & 1 & 2^{-n} & 0 \\ 0 & 0 & 1 & 1 \\ 0 & 0 & 0 & 1 \end{bmatrix} \Rightarrow \begin{cases} d' = d + (c >> n) \\ c' = c + (b >> n) \\ b' = b + a \\ a' = a \end{cases}$$

Where ">>n" represents that a right register shift of n bits and the constant 2^{-n} is a scale factor which indicates the shifting of the binary point to the left by n bits.

As a result, a portion of the error accumulated in the "b" register is truncated before added to the "c" register and a portion of the error accumulated in the "c" register is truncated before added to the "d" register. Thus the Bartels method provides greater precision than the traditional method as illustrated in Fig. 1 and the use of guard bits in the registers significantly increases the number of forward steps allowable in a 32 bit forward differencing technique by minimizing the error through the truncation of the guard bits.

In order to render higher order curves and surfaces, computer graphic systems typically are required to employ recursive subdivision methods which are expensive to implement in hardware because of high speed stack memory requirements and the increase in computational complexity over polygon rendering methods.

Adaptive forward differencing is an incremental technique which has been found to be useful in rendering higher order parametric curves and surfaces; see S.L. Lien, M. Shantz and V. Pratt, "Adaptive Forward Differencing for Rendering Curves and Surfaces", Computer Graphics, Vol. 21, No. 4, July 1987; M. Shantz and S.L. Chang, "Rendering Trimmed Nurbs with Adaptive Forward Differencing", Siggraph '88 proceedings, July 1988; and Shantz et al., United States Patent Application Serial No. 047,696, filed May 8, 1987 for Method and Apparatus for Adaptive Forward Differencing in the Rendering of Curves and Surfaces. In the adaptive forward differencing technique, the parametric equation of the curve is transformed to an identical curve with a different parameterization, such that the size of the parametric increments is increased or decreased in order that the curve proceeds in substantially uniform increments such as approximately one pixel step on a display CRT. This differs from ordinary forward differencing in which the

parametric increment is a constant and the step size is non uniform. Lien et. al. described a method in which the curve increment is decreased by dividing the parameter increment by two and increased by multiplying the parameter increment by two. This is implemented by multiplying the forward difference coefficients by an "Adjust Up" matrix "U" or an "Adjust Down" "D" matrix prior to multiplying the coefficients by the forward step or "forward difference" matrix which determines the next point along the curve:

$$U=\begin{bmatrix}1 & 0 & 0 & 0\\ 0 & 2 & 1 & 0\\ 0 & 0 & 4 & 4\\ 0 & 0 & 0 & 8\end{bmatrix} \Rightarrow \begin{cases} d' = d \\ c' = (c << 1) + b \\ b' = (a + b) << 2 \\ a' = a << 3 \end{cases}$$

$$D=\begin{bmatrix}1 & 0 & 0 & 0\\ 0 & 1/2 & 1/8 & 1/16\\ 0 & 0 & 1/4 & 1/8\\ 0 & 0 & 0 & 1/8\end{bmatrix} \Rightarrow \begin{cases} d' = d \\ a' = a >> 3 \\ b' = (b >> 2) - a' \\ c' = (c - b') >> 1 \end{cases}$$

Klassen, "Antialiasing Cubic Splines", ACM Transactions on Graphics (USA), Vol. 10, No. 1; January 1990, expanded the concept of adaptive forward differencing by employing guard bits in the process. More specifically Klassen modified the adjust-up matrix and the adjust-down matrix to incorporate the usage of guard bits in the adaptive forward difference (AFD) registers (b, c, and d) and to vary the number of guard bits in the b,c,d registers after each adjustment operation such that one guard bit is added after an adjust down operation (illustrated in Fig. 3b), and one guard bit is eliminated after an adjust up operation (illustrated in Fig. 3a) giving the *effect* of a floating binary point in the registers. This is implemented using the adjust-up matrix Uk and adjust-down matrix Dk and the resulting equations shown below:

$$U_k=\begin{bmatrix}1/2 & 0 & 0 & 0\\ 0 & 1/2 & 2^{-n-2} & 0\\ 0 & 0 & 1/2 & 1/2\\ 0 & 0 & 0 & 1\end{bmatrix} \Rightarrow \begin{cases} d' = d >> 1 \\ c' = (c >> 1) + (b >> (n + 2)) \\ b' = (a + b) >> 1 \\ a' = a \\ \text{and} \quad n' = n - 1 \end{cases}$$

$$D_k = \begin{bmatrix} 2 & 0 & 0 & 0 \\ 0 & 2 & -2^{-n} & 2^{-n-1} \\ 0 & 0 & 2 & -1 \\ 0 & 0 & 0 & 1 \end{bmatrix} \Rightarrow \begin{cases} d' = d << 1 \\ b' = (b << 1) - a \\ c' = (c << 1) - (b' >> (n+2)) \\ a' = a \\ \text{and} \quad n' = n + 1 \end{cases}$$

However, in Klassen's process the binary point of the "d" register is varied. This point is critical because in the hardware implementation of AFD the d register accumulates the result of the forward step calculation which is output from the AFD circuit and is determinative of the next point along the curve. Thus, the precision of the calculation is dependent upon the number of fractional bits in the d register. This problem is particularly evident when the parametric increment is adjusted severely upward and the registers are shifted so far to the left that a minimal number of fractional bits remain. In addition, the format of the output is not constant because the format is dependent upon the number of adjust-up and adjust-down operations which have occurred. Thus the hardware which interfaces with AFD hardware is further complicated with circuitry to accommodate inputs having a floating binary point.

SUMMARY OF THE INVENTION

It is therefore an object of the present invention to provide a method and apparatus for Integer Adaptive Forward Differencing employing a floating binary point which provides for a high precision output regardless of the number of adjust-up and adjust-down operations.

It is further an object of the present invention to provide a method and apparatus for floating binary point adaptive forward differencing in which the output is consistent in a 16.16 fract -format generally used to execute integer instructions in digital computer systems.

It is also an object of the present invention to a method and apparatus which minimizes the number of mathematical operations required to perform an adjust-up and adjust-down operation in the adaptive forward differencing process.

The method and apparatus of the present invention provides for using a floating binary point adaptive forward differencing technique in which the binary point of "d" register, containing the value of "d" coefficient of the forward differencing basis, is not shifted during parameter adjust-up and adjust-down operations. The binary point of the a, b, c coefficient registers of the parametric equation are initially shifted n bits (i.e. the register contains "n" guard bits) and the binary point is shifted to the right when an adjust-up operation is performed and to the left when an adjust-down operation is performed respectively reflecting the removal of a guard bit when an adjust-up operation is performed and the addition of a guard bit when an adjust-down operation is performed.

BRIEF DESCRIPTION OF THE DRAWINGS

FIG. 1 illustrates the alignment and integer format of the registers in the prior art method of forward differencing.

FIG. 2 illustrates the alignment and integer format of the registers in the Bartel's prior art method of forward differencing.

FIG. 3(a) and 3(b) illustrate the alignment and format of the register's in Klassen's prior art method of adaptive forward differencing.

FIG. 4(a), 4(b), 4(c) illustrate the movement of the binary point in the registers containing the coefficients in the method and apparatus of the present invention.

FIG. 5 illustrates the status of the coefficient registers after a plurality of adjust-up operation using Klassen's prior art technique, and **FIG. 5(b)** illustrates the status of the coefficient registers using the method and apparatus of the present invention.

FIG. 6 illustrates a preferred embodiment of the present invention utilized to render curves in single pixel increments.

FIG. 7 illustrates the organization of the elements used to perform the adjust-up, adjust-down and forward operations in the preferred embodiment of the present invention.

FIG. 8 illustrates the pixel filter utilized with the preferred embodiment of the present invention shown in Fig. 6.

DETAILED DESCRIPTION OF THE INVENTION

In the method and apparatus of the present invention, the adaptive forward differencing technique is utilized to compute values of a polynomial parametric function which is typically in the form $f(t) = At^3 + Bt^2 + Ct + D$. Although the invention is described with respect to a third order function, the concepts may be easily applied to different order parametric functions. The parametric function is first converted to forward difference basis using known techniques, such as that described in Foley and Van Dan, Principles of Interactive Graphics, pp 531-536. The coefficients of the parametric function in forward difference basis, a, b, c and d, are stored in registers (referred to as the "a", "b", "c" and "d" registers) and operated on to generate the values of the parametric equation.

Referring to Fig. 4b, the binary points of each of the a, b, c and d registers, 10, 20, 30 and 40, are located such that the c register 30 is shifted "n" bits to the right of the d register 40 and the a and b registers 10, 20 are shifted n bits to the right of the c register 30 and 2n bits to the right of the d register 30. The number n, called "tessellation number", which is determinative of the number of guard bits, indicates the current level of subdivision which is related to the instant velocity of a curve at the current position along the curve. Preferably, the value of the initial tessellation number n is set by the user. A user may calculate the initial tessellation number by computing the magnitude of the first order derivative at the beginning point of a curve. Thus, it can be said that the a and b registers 10, 20 contain 16 + 2n fractional bits, the c register 30 contains 16 + n fractional bits and the d register 40 contains 16 fractional bits.

If an adjust-up operation is performed to double the parametric increment, the value n is decremented by one and the binary point of the a, b and c registers 10, 20, 30 are accordingly right shifted by one as illustrated in Fig. 4a. Thus, the result is that the a and b registers 10, 20 contain 16 + 2(n-1) fractional bits, the c register 30 contains 16 + (n-1) fractional bits, and the d register 40 maintains 16 fractional bits. Similarly if an adjust-down operation is performed to halve the parameter increment, the binary point of the a, b, c registers 10, 20 and 30 accordingly are left shifted by one as illustrated in Fig. 4c. The result is that the a, b, c and d registers 10, 20, 30 and 40 contain 16 + 2(n+1), 16 + 2(n+1), 16 + (n+1), and 16 fractional bits respectively.

It should be noted that the binary point of the d register 40 is not shifted during the adjust-up and adjust-down operations. Thus the output of the AFD circuit after the forward step operation is maintained in a constant format. Preferably the binary point of the d register 40 is maintained between the 16 most significant bits and 16 least significant bits such that the output of the circuit is a fixed point 16•16 fract-format, a compatible format which is most frequently used in applications operated in integer arithmetic.

One of the advantages of maintaining the output in a fixed format is illustrated in Fig. 5. Fig. 5 is exemplary of the status of the 32 bit registers when a number of adjust-up operations occur. Fig. 5a is illustrative of the process described by Klassen when the velocity of the curve at the current point is approximately 2^2 and a number of adjust -up operations have occurred. For example, Fig. 5a may reflect the status of the registers if the original tessellation number was 10 and 8 adjust operations have occurred. Fig. 5b is illustrative of the status of the a, b, c and d registers using the method and apparatus of the present invention. While only 6 fractional bits are maintained

in the a register using Klassen's method, 20 bits are maintained in the a register and a constant 16 fractional bits are maintained in the d register using the method and apparatus of the present invention. Thus, the method and apparatus of the present invention provides a much greater precision than prior art methods.

Utilizing the method and apparatus of the present invention, the adjust-up operation is realized by multiplying the forward difference coefficients a, b, c and d by the matrix [Uc]:

$$Uc = \begin{bmatrix} 1 & 0 & 0 & 0 \\ 0 & 1 & -2^{-n-1} & 0 \\ 0 & 0 & 1 & 1 \\ 0 & 0 & 0 & 2 \end{bmatrix} \Rightarrow \begin{cases} d' = d \\ c' = c + b >> (n+1) \\ b' = b + a \\ a' = a << 1 \\ n' = n - 1 \end{cases}$$

Wherein the value of n is decremented by one and results in a set of new coefficients a', b', c' and d'; "b >> (n + 1)" is representative of the right shift of the contents in b register by n + 1 bits and "a << 1" is representative of the left shift of the contents of the "a" register by one bit.

Similarly the adjust-down operation is realized by the multiplication of the forward difference coefficients a, b, c and d by the matrix [Dc]:

$$Dc = \begin{bmatrix} 1 & 0 & 0 & 0 \\ 0 & 1 & -2^{-n-2} & 2^{-n-3} \\ 0 & 0 & 1 & -1/2 \\ 0 & 0 & 0 & 1 \end{bmatrix} \Rightarrow \begin{cases} a' = a >> 1 \\ b' = b - a' \\ c' = c - (b' >> (n+2)) \\ d' = d \\ n' = n + 1 \end{cases}$$

Wherein the value of n is incremented by one and results in a set of new coefficients a', b', c' and d'.

The forward step operation is performed similarly to the ordinary forward differencing technique by the multiplication of the forward difference coefficients a, b, c and d by the matrix [Fc]:

$$Fc = \begin{bmatrix} 1 & 2^{-n} & 0 & 0 \\ 0 & 1 & 2^{-n} & 0 \\ 0 & 0 & 1 & 1 \\ 0 & 0 & 0 & 1 \end{bmatrix} \Rightarrow \begin{cases} \text{output: } (d>>16) \\ d' = d + (c>>n) \\ c' = c + (b>>n) \\ b' = b + a \end{cases}$$

Wherein the value of n is unchanged, the binary point of the registers are unchanged and a new set of coefficients b', c' and d' are generated which are determinative of the next step along the curve.

Another advantage of the method and apparatus of the present invention is realized by the comparison of the adjust-up and adjust-down matrices of Klassen, Uk, Dk and the adjust-up and adjust-down matrices of the present invention Uc and Dc. The matrices utilized in the method and apparatus of the present invention employ fewer operations and therefore requires less computational overhead and expense.

As stated earlier, the method and apparatus of the present invention may be utilized in a variety of applications which employ the computing of the values of parametric functions. However, it is preferred that this is applied to the rendering of curves and surfaces in computer generated images, i.e. computer graphics. In this regard, the use of the Integer Adaptive Forward Differencing technique in the rendering of curves will be described below.

Fig. 6 illustrates an overall block diagram view of the system to render curves and surfaces using the integer adaptive forward differencing

method of the present invention. In order to define images on a CRT display or other display device, it is necessary to manipulate data at a high speed in order to select the pixels of a CRT display that define the curve, curved surface, vector or image that is desired to be displayed. It is known that the location of each point to be displayed on a CRT is typically represented by digital values stored in a memory device which correspond to x, y, z and w homogenous coordinates.

The coefficients of the equations describing curves to be rendered by the system of Figure 6 are calculated and supplied by a CPU 100 and are transmitted to the W, X, Y, and Z Adaptive Forward Differencing Unit ("AFDU") circuits 110, 112, 114 and 116 which, in response, output w, x, y, and z coordinates, respectively, for each pixel to be drawn on the display. The w coordinate outputted by the W AFDU circuit 110 is coupled to the 1/w circuit 118 which, in turn, outputs the current value of 1/w. The x, y and z coordinates are divided by the homogenous coordinate w (i.e. multiplied by the current reciprocal value in order to obtain the ratio of two cubic functions), by the 1/w circuit 118 and the three multipliers 120, 122, and 124.

More specifically, the X AFDU circuit 112 outputs the current x coordinate to a multiplier 120, wherein it is multiplied by the corresponding 1/w value outputted by the 1/w circuit 118, such that a current x/w value is supplied to pixel filter 130. In a similar fashion, y/w and z/w are supplied to pixel filter 130, respectively, by W, Y and Z AFDU circuits 110, 114, and 116, 1/w circuit 118 and by the multipliers 122 and 124. In this fashion the x, y, and z coordinates of the rational cubic functions are inputted to pixel filter 130 and used to select the pixels defining images of the rational cubic functions on a CRT.

The pixel filter 130 of Figure 6 compares the current x, y and z coordinates, which are input to the pixel filter 130 by multipliers 120, 122, and 124, with the x, y and z coordinates, which were input to the pixel filter 130 one clock cycle previously, and instructs the W, X, Y and Z AFDU circuits to "adjust-up" (i.e., advance the curve or curved surface in larger increments) or to "adjust-down" (i.e., advance the curve or curved surface in smaller increments) or to "step forward" to the next pixel by performing a "forward-step operation" utilizing the matrix [Fc] such that the x, y and z coordinates outputted by pixel filter 130 advance along the curve being displayed on the CRT substantially single pixel increments. The adjust up operation is performed by multiplying the forward difference coefficients in the a, b, c and d registers by [Uc] matrix and the adjust down operation is performed by multiplying the forward difference coefficients in the a, b, c and d registers by [Dc] matrix.

The pixel filter 130 is coupled, at outputs 133, 135, and 137, to frame buffer (not shown) which, in turn, is coupled to a CRT display (also not shown) or other appropriate display device, for defining images by enabling, or writing a color value at the pixels defined by the pixel coordinates outputted by pixel filter 130 at outputs 133, 135 and 137. Furthermore, arc length output 131 of pixel filter 130 is coupled to a paint section (not shown) which paints pixels in accordance with the arc length value outputted by pixel filter 130 at output 131. The arc length value is employed in the drawing of textured (dashed, dotted, etc.) lines and surfaces.

Each AFDU circuit calculates a parametric cubic function f(t) represented as:

$$f(t) = aB_3(t) + bB_2(t) + cB_1(t) + dB_0(t)$$

For each x, y, z and w coordinate the parametric cubic function f(t) is:

$$x(t) = a_xB_3(t) + b_xB_2(t) + c_xB_1(t) + d_xB_0(t)$$
$$y(t) = a_yB_3(t) + b_yB_2(t) + c_yB_1(t) + d_yB_0(t)$$
$$z(t) = a_zB_3(t) + b_zB_2(t) + c_zB_1(t) + d_zB_0(t)$$
$$w(t) = a_wB_3(t) + b_wB_2(t) + c_wB_1(t) + d_wB_0(t)$$

x(t), y(t), z(t) and w(t) are respectively calculated in the X AFDU circuit 112, Y AFDU circuit 114, Z AFDU circuit 116 and W AFDU 110. Fig. 7 is a block diagram representative of the X AFDU circuitry 112 of Fig. 6. Y, Z and W AFDU circuits 114, 116 and 110 are identical in circuitry to the X AFDU circuit 112, and therefore a thorough understanding of X AFDU circuit 112 will also fully convey the circuitry and operation of Y, Z and W AFDU circuits 110, 114 and 116.

The above functions B3(t), B2(t), B1(t) and B0(t) are forward difference basis functions. These functions are usually defined as t varies from 0 to 1 along a curve. The dt step size or parameter increment for t is automatically adjusted so that the curve is incremented according to a predetermined heuristic function. For example, the parameter increment may be adjusted such that the curve is incremented in substantially uniform amounts or more specifically, single pixel steps. To simplify the explanation of the system, the heuristic in which the curve is incremented in single pixel step is used. However it is evident that any heuristic may be used.

The four forward difference basis functions $B_3(t)$, $B_2(t)$, $B_1(t)$ and $B_0(t)$ are listed below:

$$B_3(t) = \frac{t^3 - 3t^2 + 2t}{6}$$

$$B_2(t) \quad \frac{t^2 - t}{2}$$

$$B_1(t) = t$$

$$B_0(t) = 1$$

The coefficients of the integer adaptive forward differencing function a, b, c and d are initially calculated by CPU 100 as follows:

$$d = D$$

$$c = C + ((B + (A >> n)) >> n)$$

$$b = 2B + (6A >> n)$$

$$a = 6A >> n$$

The values A, B, C and D are the coefficients of the cubic polynomial function. The integer "n" is referred to as the tessellation number or the level of subdivision and reflects a value input by the user. The tessellation number n indicates that a parametric curve can be tessellated into 2^n number of segments using equal parametric increments at 2^{-n} spacing. The notations "<<" and ">>" represent a left shift and a right shift. For example, the notation "A >> n" indicates that data A is right shifted by n bits.

The coefficients a, b, c, d and the tessellation number n are loaded into the four coefficient registers 134, 150, 162, 172 and tessellation register 147 of each AFDU circuit at initialization by the CPU 100. At each clock cycle, the parameter t increases by dt and the four coefficients are updated to a', b', c', d' while the four AFDU circuits 110, 112, 114 and 116

generate the coordinates of the next point which correspond to a particular pixel on the CRT display.

If the x, y coordinate currently calculated by the X and Y AFDU circuits 112 and 114 define a pixel location on the CRT display which is more than a single pixel increment from the previously defined pixel, then pixel filter 130 instructs each AFDU circuit to divide the parametric increment dt by two (adjust down), thereby reducing the x, y increments so that at each clock cycle each AFDU circuit outputs coordinates which define pixels along the curve in approximately single pixel increments. In a similar fashion, if the x, y address step is less than a 1/2 pixel increment from the previously defined pixel, then the parametric increment dt is doubled (adjusted up) to increase the change in the x, y coordinates such that again approximately one pixel step is incremented at each clock cycle. To reduce dt by half, the cubic functions x(t), y(t). z(t), w (t) are transformed as follows:

$$x'(t) = x(t/2) = a'_x B_3(t) + b'_x B_2(t) + c'_x B_1(t) + d'_x B_0(t)$$
$$y'(t) = y(t/2) = a'_y B_3(t) + b'_y B_2(t) + c'_y B_1(t) + d'_y B_0(t)$$
$$z'(t) = z(t/2) = a'_z B_3(t) + b'_z B_2(t) + c'_z B_1(t) + d'_z B_0(t)$$
$$w'(t) = w(t/2) = a'_w B_3(t) + b'_w B_2(t) + c'_w B_1(t) + d'_w B_0(t)$$

Coefficients of the transformed set of cubic functions are given by:

$$a' = a >> 1$$
$$b' = b - (a >> 1)$$
$$c' = c - ((b - (a >> 1)) >> (n + 2))$$
$$n' = n + 1$$

In order to double dt, the coordinate cubic functions are transformed by:

$$x'(t) = x(2t)$$
$$y'(t) = y(2t)$$
$$z'(t) = z(2t)$$
$$w'(t) = w(2t)$$

In the case of doubling dt, the method of the present invention utilizes the following coefficient transformation:

$$c' = c + (b >> (n + 1))$$
$$b' = b + a$$
$$a' = a << 1$$
$$n' = n - 1$$

If the current step size being used by the AFDU circuits is approximately a one pixel increment, then the AFDU circuits generate coordinates corresponding to a new pixel and step forward to that pixel by performing the following transformation:

$$x'(t) = x(t + 1)$$
$$y'(t) = y(t + 1)$$
$$z'(t) = z(t + 1)$$
$$w'(t) = w(t + 1)$$

and the corresponding coefficient transformation for an increment of one pixel is:

$$a' = a$$
$$b' = b + a$$
$$c' = c + (b >> n)$$
$$d' = d + (c >> n)$$

Returning to Fig. 7, in order to implement the above transformations (adjust-up, adjust-down, or forward-step) the pixel filter 130 sends signals over bus 151 to multiplexor 132, 144, 156, 170 and 146 to select an appropriate input into, pixel filter 130 controls the adder/subtracter 145, 158, 166 and register 147; pixel filter 130 controls the adder/subtracter 145, 158 and 166, to perform either an addition or subtraction operation; pixel filter 130 sends signals to multiplexor 146 and incrementer/decrementer 149 to either increase or decrease the data in register 147 by one or not to modify the data. Barrel shifter 159 performs only a single bit right shift or left shift. Pixel filter 130 controls the direction of shifting on barrel shifter 159 to perform either a right shift or a left shift operation. Barrel shifter 155 and 157 perform only right shift operation. The data in register 147 determines the number of bits to be shifted by barrel shifters 155, 157. The data in register 162 is input to barrel shifter 155 which right shifts the data by the number of bits specified in register 147 and outputs the data to multiplexor 170. Similarly, barrel shifter 157 receives input data from register 150 and produces a right shifted output to multiplexor 156.

To perform an adjust-down transformation, the new coefficients are adjusted to be:

$$a' = a >> 1$$
$$b' = b - (a >> 1)$$
$$c' = c - ((b - (a >> 1)) >> (n + 2))$$
$$d' = d$$
$$n' = n + 1$$

The new coefficients are obtained in three clock cycles as follows:

First clock cycle, pixel filter 130 places control signals on bus 151 which causes incrementer/decrementer 149 to increase the data in register 147 by one, barrel shifter 159 to right shift by one bit, and multiplexor 132 to select an input from barrel shifter 159. At the end of this clock cycle, the result is $n' = n + 1$ and $a' = a >> 1$. During the second clock cycle, pixel filter 130 places control signals on bus 151 which causes incrementer/decrementer 149 to increase the data in register 147 by one, multiplexor 144 to select an input from register 134 and adder/subtracter 145 to perform a subtraction. At the end of the second clock cycle, the result of two clock operations is:

$$n' = n + 2$$
$$a' = a >> 1$$
$$b' = b - (a >> 1)$$

During the third clock cycle, pixel filter 130 places control signals on bus 151 which causes multiplexor 156 to select an input from barrel shifter 157 to perform a right shift, adder/subtracter 158 to perform a subtraction, and incrementer/decrementer 149 to decrease the data in register 147 by one. The results of the three clock operation is:

$$a' = a >> 1$$
$$b' = b - (a >> 1)$$
$$c' = c - ((b - (a >> 1)) >> (n + 2))$$
$$d' = d$$
$$n' = n + 1.$$

Similarly, as previously discussed, when the pixel increment calculated by the X AFDU circuit 112 and the Y AFDU circuit 114 are both less than 0.5 of a pixel step, an adjust-up transformation is performed and the coefficients a, b, c, and d are transformed by:

$$c' = c + (b >> (n + 1))$$
$$b' = b + a$$
$$a' = a << 1$$
$$d' = d$$
$$n' = n - 1$$

To perform an adjust-up transformation, the new coefficients are obtained in three clock cycles as follows:

During the first clock cycle, pixel filter 130 places control signals on bus 151 which causes incrementer/decrementer 149 to increase the data in register 147 by one, resulting in the operation $n' = n + 1$. During the second clock cycle, pixel filter 130 places control signals on bus 151 which causes multiplexor 156 to select an input from barrel shifter 157, barrel shifter 157 to perform a right shift, adder/subtracter 158 to perform an addition, multiplexor 144 to select an input from register 134, add/subtracter 145 to perform an addition, and incrementer/decrementer 149 to decrease the data in register 147 by one which results, at the end of two clock cycles in the operations:

$$b' = b + a$$
$$c' = c + (b >> (n+1))$$
$$n' = n.$$

During the third clock cycle, pixel filter 130 places control signals on bus 151 which causes barrel shifter 159 to perform a single bit left shift, multiplexor 132 to select an input from barrel shifter 159, and incrementer/decrementer 149 to decrease the data in register 147 by one. Thus the resulting operations at the end of this clock cycle are:

$$a' = a << 1$$
$$b' = b + a$$
$$c' = c + (b >> (n + 1))$$
$$n' = n - 1.$$

Alternately, if the AFDU circuit calculates an X increment between 0.5 and 1 and a Y increment between 0.5 and 1, then the a, b, c, and d coefficients are transformed with the forward-step transformation:

$$d' = d + (c >> n)$$
$$c' = c + (b >> n)$$
$$b' = b + a$$
$$a' = a$$

A forward-step transformation is performed in one clock cycle as follows: Pixel filter 130 places control signals on bus 151 which causes multiplexor 132 to select an input from register 134, multiplexor 144 to select an input from register 134, multiplexor 156 to select an input from barrel shifter 157, multiplexor 170 to select an input from barrel shifter 155, barrel shifter 155 and 157 to perform a right shift, and add/subtracter 145, 158, and 166 to perform an addition. The result at the end of the clock cycle is:

$$d' = d + (c >> n)$$
$$c' = c + (b >> n)$$
$$b' = b + a.$$

It can be appreciated that only the outputs from AFDU circuits X, Y, and W are used by the pixel filter to control the adjustment of all four AFDU circuits since the x/w and y/w coordinates sufficiently define pixel location. In such a fashion, the AFDU circuits 110, 112 and 114, in cooperation with the 1/w circuit 118, multipliers 120, 122, 124 and pixel filter 130, ensure that the curves rendered are incremented in substantially one pixel increments.

Memory buffers 148, 160, and 168 are used to store a sequence of the previous b, c and d values, respectively, so that the properly delayed

coordinate values associated with the pixel filter 130 control signal are used. This is necessary because pixel filter 130 determines control decisions several clocks after the AFDU generates the pixel addresses. Memory buffers 148, 160 and 168 store a sequence of values having a delay equal to the number of clocks between the AFDU and the pixel filter. No memory buffer is necessary for register 134 since "a" does not change during a forward step operation.

Referring to Fig. 8, the pixel filter will now be discussed. Registers 202, 203, 204, 205 and 206 of Fig. 8 store coordinate values x_n to x_{n+4} which are outputs supplied by X AFDU circuit 112 and multiplied by 1/W by multiplier 120 (of Fig. 6) in the five previous clock cycles. Similarly, y registers 220, 212, 222, 223 and 224 store y values y_n to y_{n+4}. Likewise, registers 234, 235, 236, 237 and 238 store z values z_n to z_{n+4}.

Register 202-206 store, sequentially, each x coordinate supplied thereto by the X AFDU circuit 112 and multiplier 120 such that x_{n+4} is the most recently calculated coordinate. At each clock cycle comparator 194 compares the value x_{n+3} in register 205 with x_{n+4} in register 206, and comparator 212 compares the value y_{n+3} in register 223 with y_{n+4} in register 224. If the absolute value of $x_{n+4} - x_{n+3}$ and the absolute value of $y_{n+4} - y_{n+3}$ are both less than 0.5 of a single pixel increment, the controller 192 sends a control signal to all four AFDU circuits instructing the same to increase the step size (adjust-up) as previously described with respect to Figs. 6 and 7. If the absolute value of $x_{n+4} - x_{n+3}$ is greater than one pixel increment or the absolute value of $y_{n+4} - y_{n+3}$ is greater than one pixel increment, the controller then asserts a control signal to all four AFDU circuits which instruct the same to decrease the step size (adjust-down).

Values z_{n+4} and z_{n+3} stored in registers 238 and 237 are not used to determine whether or not the step size should be adjusted upwardly or downwardly because the x and y coordinates sufficiently define a pixel location on a CRT display. However, registers 238 and 237 function as delay buffers so that values z_{n+2}, z_{n+1} and z_n (which are stored, respectively, in registers 236-234) will correspond to the values of y_{n+2}, y_{n+1} and y_n (stored in, respectively 222, 221 and 220) and to the values of x_{n+2}, x_{n+1} and x_n (stored in registers 204, 203 and 202).

Alternatively, if the absolute value of $x_{n+4} - x_{n+3}$ and the absolute value of $y_{n+4} - y_{n+3}$ are both between 0.5 and 1.0 pixel units, then the comparators 194 and 212 instruct control circuit 192 to instruct all four AFDU circuits to perform a forward step operation as previously described.

It is important to note that all four AFDU circuits 110, 112, 114 and 116 of Fig. 4 are adjusted upwardly, downwardly, or forwardly in synchronicity by pixel filter 130.

In order to eliminate redundant pixels in a displayed image, comparator 196 compares the integer part of the value x_{n+2} which is stored in register 204, with the integer part of the x_{n+1} value stored in register 203. Comparator 214 then compares the integer part of the value y_{n+2} in register 222 with the integer part of the value y_{n+1} in register 221. If the integer parts $x_{n+2} = x_{n+1}$ and $y_{n+2} = y_{n+1}$, comparators 196 and 214 assert signals at control circuit 192 which, in turn, output an invalid pixel bit to paint section 250, such that paint section 250 invalidates the display of the pixel with the coordinates corresponding to x_{n+1} and y_{n+1}.

It will be appreciated that the above-described invention may be embodied in other specific forms without departing from the spirit or essential characteristics thereof. The present embodiments are, therefore, to be considered in all aspects as illustrative and not restrictive, the scope of the invention being indicated by the appended claims rather than by the foregoing description, and all changes which come within the meaning and range of equivalency are, therefore, intended to be embraced therein.

CLAIMS

1. An apparatus for rendering a parametric function using adaptive forward differencing and integer arithmetic wherein the output of the parametric function is calculated in increments according to a predetermined heuristic function, said output is calculated in increments by adjusting the size of a parameter increment of the parametric function, said apparatus comprising:

means for translating the parametric function into a forward difference basis comprising forward difference coefficients, each forward difference coefficient corresponding to a different order derivative of the parametric equation such that a first forward difference coefficient corresponds to the value of the parametric function, a second forward difference coefficient corresponds to the first order derivative of the parametric function and succeeding forward difference coefficients correspond to succeeding order derivatives of the parametric function;

register means for storing each of the forward difference coefficients such that the first forward difference coefficient is stored having a predetermined number of fractional bits, and succeeding forward difference coefficients are stored having a number of fractional bits equal to the predetermined number of fractional bits plus a number of guard bits equal to a predetermined number of guard bits multiplied by a multiplication factor, said multiplication factor value being zero for the first forward difference coefficient and incremented by one for each succeeding forward difference coefficient, the highest order coefficient retaining the same multiplication factor value as the preceding lower order coefficient;

means for calculating the output of the parametric function for a predetermined parameter;

means for comparing the output with the heuristic function to determine whether to adjust the parameter increment up, down or to advance by an amount equal to the current increment to calculate the next output of the parametric function;

means for adjusting the parameter increment up, comprising means for decreasing the number of guard bits in the register means by the value of the multiplication factor;

means for adjusting the parameter increment down, comprising means for increasing the number of guard bits in the register means by the value of the multiplication factor;

means for advancing comprising updating the forward difference coefficients;

whereby the first forward difference coefficient consistently has the predetermined number of fractional bits with increased precision due to the use of guard bits with respect to the succeeding forward difference coefficients.

2. The apparatus of claim 1 wherein the heuristic function comprises calculating the output of the parametric function in substantially uniform increments.

3. The apparatus of claim 1:

further comprising a means for displaying computer generated images; and

wherein the heuristic function comprises calculating the output of the parametric function in approximately one pixel increments.

4. The apparatus of claim 1 wherein the predetermined number of fractional bits is equal to 16.

5. The apparatus of claim 1 wherein the first forward difference coefficient is stored in such a manner that one-half of the total number of bits are fractional bits.

6. The apparatus of claim 1 where the predetermined number of guard bits is equal to two, and the number of guard bits in the succeeding forward difference coefficients are incremental values of two.

7. The apparatus of claim 1 wherein the parametric function is a third order polynomial function.

8. The apparatus of claim 7 wherein the means for translating a polynomial parametric function results in a forward difference basis having four forward difference coefficients.

9. The apparatus of claim 8 wherein said register means:

stores the first forward difference coefficient in such a format that one-half of the total number of bits representing the coefficient value are fractional bits;

stores the second forward difference coefficient in such a format that one-half of the total number of bits representing the coefficient value plus the predetermined number of guard bits are fractional bits;

stores the third forward difference coefficient in such a format that one-half of the total number of bits representing the coefficient value plus the predetermined number of guard bits multiplied by two are fractional bits; and

stores the fourth forward difference coefficient in such a format that one-half of the total number of bits representing the coefficient value plus the predetermined number of guard bits multiplied by two are fractional bits.

10. The apparatus of claim 9 wherein the means for calculating the value of the parametric function comprises means for calculating the value to be equal to the output in the first forward difference register.

11. The apparatus of claim 9 wherein the means for adjusting up the parameter increment comprises:

means for adjusting the parameter increment through the calculation of the following equations;

```
d' = d;
c' = c + (b >> (n+1));
b' = b + a;
a' = a << 1; and
n' = n-1
```

wherein d represents the current first forward difference coefficient, c,b and a respectively represent the current second, third and fourth forward difference coefficients, n represents the current tessellation number; wherein d' represents the first forward difference coefficient after adjusting up, c',b' and a' respectively represent the second, third and fourth forward difference coefficients after adjusting up, and n' represents the tessellation number after adjusting up; and

means for decreasing the number of guard bits in the second forward difference register by one, in the third forward difference register by two and the fourth forward difference register by two.

12. The apparatus of claim 9 wherein the means for adjusting down the parameter increment comprises:

means for adjusting the parameter increment through the calculation of the following equations;

```
a' = a >> 1;
b' = b - (a >> 1);
c' = c - ((b - (a >> 1)) >> (n+2));
d' = d; and
n' = n+1
```

wherein d represents the current first forward

difference coefficient, c,b and a respectively represent the current second, third and fourth forward difference coefficients, and n represents the current tessellation number; wherein d' represents the first forward difference coefficient after adjusting up, c',b' and a' respectively represent the second, third and fourth forward difference coefficients after adjusting up, and n' represents the tessellation number after adjusting up; and

means for increasing the number of guard bits in the second forward difference register by one, in the third forward difference register by two and the fourth forward difference register by two.

13. The apparatus of claim 9 wherein the means for advancing comprises:

means for updating the forward difference equations according to the following equations:

```
d' = d + (c >> n);
c' = c + (b >> n);
b' = b + a;
a' = a;
```

wherein d represents the current first forward difference coefficient, c,b and a respectively represent the current second, third and fourth forward difference coefficients, and n represents the current tessellation number; and wherein d' represents the first forward difference coefficient after adjusting up, c',b' and a' respectively represent the second, third and fourth forward difference coefficients after adjusting up, and n' represents the tessellation number after adjusting up.

14. In a system for rendering a parametric function using adaptive forward differencing a method for implementing using integer arithmetic wherein the output of the parametric function is calculated in increments according to a predetermined heuristic function, said output is calculated in increments by adjusting the size of a parameter increment of the parametric function, said method comprising the steps of:

translating the parametric function into a forward difference basis comprising forward difference coefficients, each forward difference coefficient corresponding to a different order of the parametric equation such that a first forward difference coefficient corresponds to the value of the parametric function, a second forward difference coefficient corresponds to the first order derivative of the parametric function and succeeding forward difference coefficients correspond to succeeding order derivatives of the parametric function;

storing each of the forward difference coefficients in a register means whereby the first forward difference coefficient is stored having a predetermined number of fractional bits and succeeding forward difference coefficients are stored having a number of fractional bits equal to the predetermined number of fractional bits plus a number of guard bits, said number of guard bits equal to a initial number of guard bits multiplied by a multiplication factor, said multiplication factor value being zero for the first forward difference coefficient, and incremented by one for each succeeding forward difference coefficient, the highest order coefficient retaining the same multiplication factor value as the preceding lower order coefficient;

calculating the output of the parametric function for a predetermined parameter;

comparing the output with the heuristic function to determine whether to adjust the parameter increment up, down or to advance by an amount equal to the current increment to calculate the next output of the parametric function;

adjusting the parameter increment up, said process of adjusting comprising the step of decreasing the number of guard bits in the register means by the value of the multiplication factor;

adjusting the parameter increment down, said process of adjusting comprising the step of increasing the number of guard bits in the register means by the value of the multiplication factor;

whereby the first forward difference coefficient consistently has the predetermined number of fractional bits with increased precision due to the use of guard bits with respect to the succeeding forward difference coefficients.

15. The method of claim 14 wherein the heuristic function comprises calculating the output of the parametric function in substantially uniform increments.

16. The method of claim 14 wherein the system is a device for the display of computer generated images and the heuristic function comprises calculating the output of the parametric function in approximately one pixel increments.

17. The method of claim 14 wherein the predetermined number of fractional bits is equal to 16.

18. The method of claim 14 wherein the first forward difference coefficient is stored in such a manner that one-half of the total number of bits are fractional bits.

19. The method of claim 14 where the number of guard bits in the succeeding forward difference coefficients are one half of the total number of bits plus an incremental amount of the predetermined number of guard bits.

20. The method of claim 14 wherein the parametric function is a third order polynomial function.

21. The method of claim 20 wherein the step of translating the parametric function results in a forward difference basis having four forward difference coefficients.

22. The method of claim 21 wherein the step for storing:

stores the first forward difference coefficient in such a format that one-half of the total number of bits representing the coefficient value are fractional bits;

stores the second forward difference coefficient in such a format that one-half of the total number of bits representing the coefficient value plus the predetermined number of guard bits are fractional bits;

stores the third forward difference coefficient in such a format that one-half of the total number of bits representing the coefficient value plus two multiplied by the predetermined number of guard bits are fractional bits; and

stores the fourth forward difference coefficient in such a format that one-half of the total number of bits representing the coefficient value plus two multiplied by the predetermined number of guard bits are fractional bits.

23. The method of claim 22 wherein the step of calculating the value of the parametric function comprises calculating the value to be equal to the output in the first forward difference register.

24. The method of claim 22 wherein the step of adjusting up the parameter increment comprises the steps of:

adjusting the parameter increment through the calculation of the following equations;

$$d' = d;$$
$$c' = c + (b >> (n+1));$$
$$b' = b + a;$$
$$a' = a << 1; \text{ and}$$
$$n' = n-1$$

wherein d represents the current first forward difference coefficient, c,b and a respectively represent the current second, third and fourth forward difference coefficients, and n is the current tessellation number; wherein d' represents the first forward difference coefficient after adjusting up, c',b' and a' respectively represent the second, third and fourth forward difference coefficients after adjusting up, and n' represents the tessellation number after adjusting up; and

decreasing the number of guard bits in the second forward difference register by one, in the third forward difference register by two and the fourth forward difference register by two.

25. The apparatus of claim 22 wherein the step of adjusting down the parameter increment comprises:

adjusting the parameter increment through the calculation of the following equations;

$$a' = a >> 1;$$
$$b' = b - (a >> 1);$$
$$c' = c - ((b - (a >>)) >> (n+2));$$
$$d' = d; \text{ and}$$
$$n' = n+1$$

wherein d represents the current first forward difference coefficient, c,b and a respectively represent the current second, third and fourth forward difference coefficients and n is the current tessellation number; wherein d' represents the first forward difference coefficient after adjusting up, c',b' and a' respectively represent the second, third and fourth forward difference coefficients after adjusting up, and n' represents the tessellation number after adjusting up; and

increasing the number of guard bits in the second forward difference register by one, in the third forward difference register by two and the fourth forward difference register by two.

26. The method of claim 22 wherein the step of advancing comprises:

updating the forward difference equations according to the following equations:

```
d' = d + (c >> n);
c' = c + (b >> n);
b' = b + a;
a' = a;
```

wherein d represents the current first forward difference coefficient, c,b and a respectively represent the current second, third and fourth forward difference coefficients and n is the current tessellation number; and wherein d' represents the first forward difference coefficient after adjusting up, c',b' and a' respectively represent the second, third and fourth forward difference coefficients after adjusting up, and n' represents the tessellation number after adjusting up.

27. An apparatus for rendering a third order polynomial parametric function using adaptive forward differencing and integer arithmetic wherein the output of the parametric function is calculated in uniform increments by adjusting the size of a parameter increment of the parametric function, said apparatus comprising:

means for translating the parametric function into a forward difference basis comprising forward difference coefficients d,c,b and a according to the following equations:

$$d = D;$$
$$c = C + ((B + (A >> n)) >> n);$$
$$b = 2B + (6A >> n);$$
$$a = 6A >> n;$$

wherein d represents the first forward difference coefficient, c,b and a respectively represent the second, third and fourth forward difference coefficients and D,C,B and A are the four coefficients of a cubic polynomial function;

register means for storing each of the forward difference coefficients a,b,c d such that the first forward difference coefficient d is stored having a predetermined number of fractional bits, second forward difference coefficient c is stored having a number of fractional bits equal to the predetermined number of fractional bits plus an initial number of guard bits, third and fourth forward difference coefficients b and a each having a number of fractional bits equal to the predetermined number of fractional bits plus the initial number of guard bits multiplied by a multiplication factor of two;

means for calculating the output of the parametric function for a predetermined parameter

comprising means for calculating the output to be equal to the value in the first forward difference register;

means for determining if the output is greater than one uniform increment, less than one-half of a uniform increment or in the range of one-half of a uniform increment to one uniform increment;

if the output is greater than one uniform increment, means for adjusting down the parameter increment comprising:

means for adjusting down the parameter increment through the calculation of the following equations;

$$a' = a >> 1;$$
$$b' = b - a';$$
$$c' = c - (b' >> (n+2));$$
$$d' = d; \text{ and}$$
$$n' = n-1$$

wherein n represents a tessellation number and d' represents the first forward difference coefficient after adjusting down, c',b' and a' respectively represent the second, third and fourth forward difference coefficients after adjusting down, and n' represents the tessellation number after adjusting down;

means for increasing the number of guard bits in the second forward difference register by one, in the third forward difference register by two and the fourth forward difference register by two;

if the output increment is less than one-half of the uniform increment, means for adjusting up the parameter increment comprising:

means for adjusting the parameter increment up through the calculation of the following equations;

$$d' = d;$$
$$c' = c + (b >> (n+1));$$
$$b' = b + a;$$
$$a' = a << 1; \text{ and}$$
$$n' = n-1$$

wherein n represents a tessellation number and d' represents the first forward difference coefficient after adjusting up, c',b' and a' respectively represent the second, third and fourth forward difference coefficients after adjusting up, and n' represents the tessellation number after adjusting up;

means for decreasing the number of guard bits in the second forward difference register by one, in the third forward difference register by two and the fourth forward difference register by two;

if the output increment is in the range of one-half of a uniform increment to one uniform increment, means for advancing the forward difference equations according to the following equations:

```
d' = d + (c >> n);
c' = c + (b >> n);
b' = b + a;
a' = a;
```

wherein d' represents the first forward difference coefficient after advancing, c',b' and a' respectively represent the second, third and fourth forward difference coefficients after advancing;

whereby the first forward difference coefficient consistently has the predetermined number of fractional bits with increased precision due to the use of guard bits with respect to the succeeding forward difference coefficients.

28. An apparatus for rendering a parametric function using adaptive forward differencing and integer arithmetic wherein the output of the parametric function is calculated in increments according to a predetermined heuristic function substantially as hereinbefore described with reference to the accompanying drawings.

29. A method for implementing adaptive forward differencing technique in integer arithmetic resulting in an increase in precision while minimizing the number of mathematical operations to be performed substantially as hereinbefore described.

REGISTER ENTRY FOR GB2226936

Form 1 Application No GB8919266.0 filing date 24.08.1989

Priority claimed:
09.01.1989 in United States of America - doc: 295117

Title METHOD AND APPARATUS FOR IMPLEMENTING ADAPTIVE FORWARD DIFFERENCING USING INTEGER ARITHMETIC

Applicant/Proprietor
SUN MICROSYSTEMS INC, Incorporated in USA - Delaware, 2550 Garcia Avenue, Mountain View, California 94043, United States of America
[ADP No. 03961703001]

Inventor
SHEUE-LING LIEN CHANG, 843 Van Dyck Court, Sunnyvale, California 94087, United States of America
[ADP No. 04352431001]

Classified to
H4T
G06F

Address for Service
POTTS, KERR & CO, 15 Hamilton Square, BIRKENHEAD, Merseyside, L41 6BR, United Kingdom
[ADP No. 00001313002]

Publication No GB2226936 dated 11.07.1990

Examination requested 08.01.1991

Patent Granted with effect from 22.09.1993 (Section 25(1)) with title METHOD AND APPARATUS FOR IMPLEMENTING ADAPTIVE FORWARD DIFFERENCING USING INTEGER ARITHMETIC

**** END OF REGISTER ENTRY ****

RENEWAL DETAILS

PUBLICATION NUMBER	GB2226936

PROPRIETOR(S)

Sun Microsystems Inc, Incorporated in USA - Delaware, 2550 Garcia Avenue, Mountain View, California 94043, United States of America

DATE FILED	24.08.1989
DATE GRANTED	22.09.1993
DATE NEXT RENEWAL DUE	24.08.1994
DATE NOT IN FORCE	
DATE OF LAST RENEWAL	29.11.1993
YEAR OF LAST RENEWAL	05
STATUS	PATENT IN FORCE