(No Model.)

J. GOAR.

WELL AUGER.

No. 456,486. Patented July 21, 1891.

Fig. 1

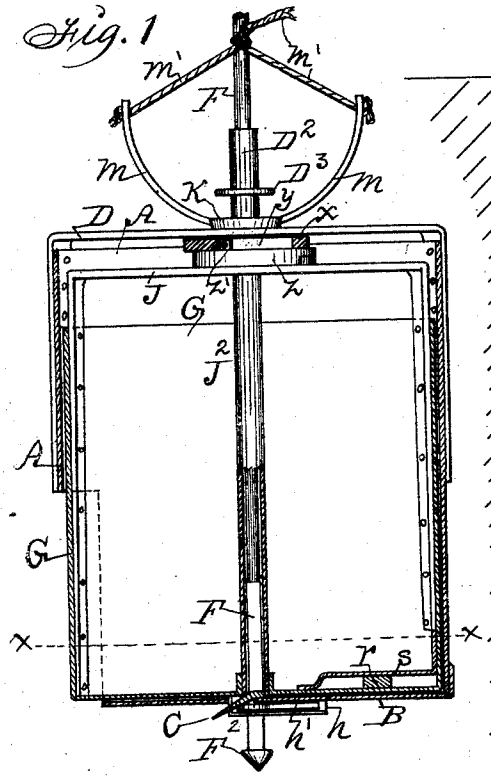

Fig. 2.

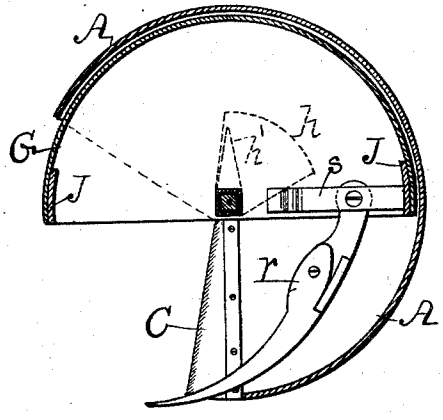

Fig. 3

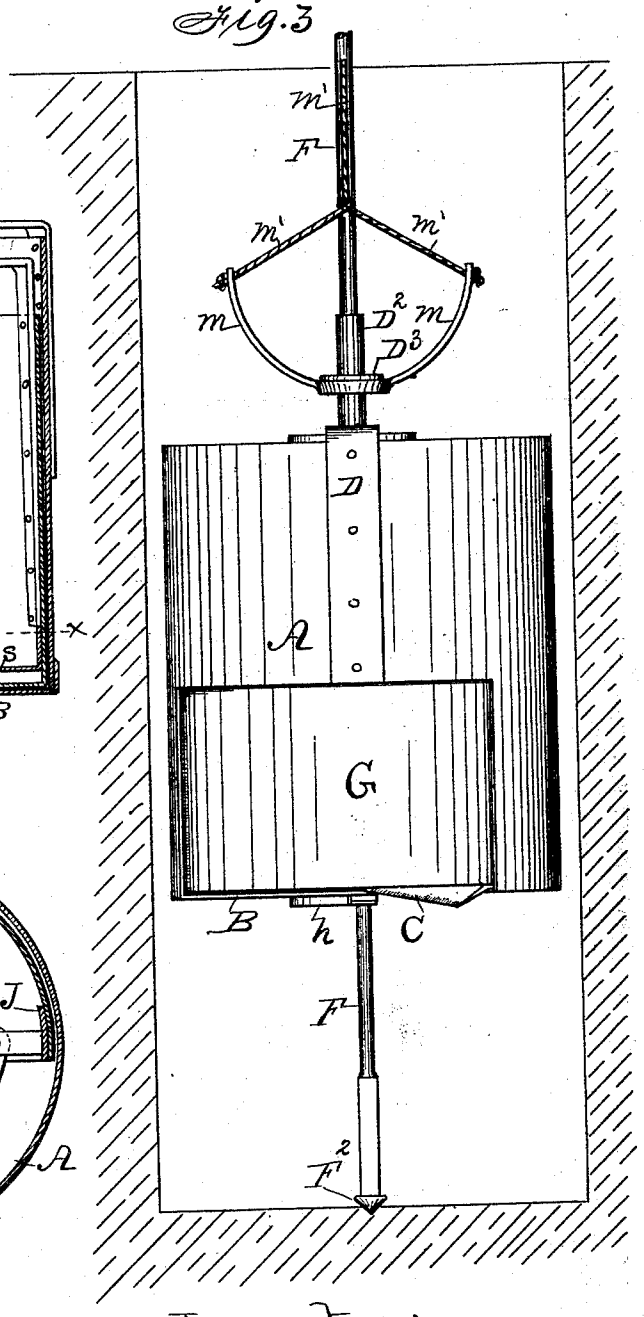

Witnesses:
M. P. Smith.
R. H. Orwig.

Inventor:
Joseph Goar.
By Thomas G. Orwig, Atty.

THE NORRIS PETERS CO., PHOTO-LITHO., WASHINGTON, D. C.

UNITED STATES PATENT OFFICE.

JOSEPH GOAR, OF MORRISTOWN, MINNESOTA.

WELL-AUGER.

SPECIFICATION forming part of Letters Patent No. 456,486, dated July 21, 1891.

Application filed March 9, 1891. Serial No. 384,359. (No model.)

To all whom it may concern:

Be it known that I, JOSEPH GOAR, a citizen of the United States of America, and a resident of Morristown, in the county of Rice and State of Minnesota, have invented an Improved Well-Auger, of which of the following is a specification.

My object is to provide an auger that can be closed after it is filled with ground cut loose thereby at the bottom of a bore in such a manner that the ground may be lifted with the auger while the auger-shaft remains stationary in the bore and the ground readily emptied from the auger at the top of the bore, and also advantageously used for cleaning wells and for making horizontal bore for laying pipes therein.

My invention consists in the construction and combination of two concentric cylinders and a cutter with a rotating auger-shaft, as hereinafter set forth, pointed out in my claims, and illustrated in the accompanying drawings, in which—

Figure 1 is a sectional view showing the relative positions of the different operative parts. Fig. 2 is a transverse sectional view looking downward from the line X X in Fig. 1. Fig. 3 shows the auger in a bore made thereby and in a closed and elevated position in the bore, as required in carrying ground upward from the bottom to the top of a bore in the ground while the auger-shaft remains stationary.

A is a cylinder, preferably made of plate metal. It may vary in diameter and length, as desired.

B is a cast or forged semicircular metal bottom, to which the bottom edge of the cylinder A is fixed.

C represents a cutter formed on or fixed to the edge of the bottom to extend from its center to its circumference and a little beyond, so it will cut a bore large enough to allow the complete auger to ascend and descend readily within the bore.

D is an arched frame fixed to the top and outside of the cylinder A. It has an opening in its top and center and a tube D^2, fixed to its top side, through which the lower end of an auger-shaft F is extended. The lower end of the shaft is angular and terminates in an enlarged and pointed end F^2.

G is a sheet-metal cylinder inside of the cylinder A and in concentric position therewith. It extends to the bottom and near to the top of the outside cylinder. It also has a semicircular bottom. The cylinder A has an opening at its bottom to admit ground cut loose by the cutter as the complete auger is rotated. The inside cylinder has a corresponding opening, and when these two openings are in coinciding position the loose ground will pass into the inner cylinder as the auger is rotated. A stop *h*, formed on or fixed to the under side of the bottom B, engages a projection *h'* on the bottom of the inner cylinder G and restricts the rotary motion of the inside cylinder when the openings in the two cylinders coincide and the auger is rotated.

J is an arched frame fixed to the inside of the cylinder G. It has a tube J^2, fixed to its center, through which the angular lower end of the auger-shaft F is extended in such a manner that when the shaft is rotated it will engage a corresponding angular section inside of the tube J^2 and will rotate the two cylinders jointly, as required to cut a bore and to admit the loose ground to enter the coinciding openings in the two cylinders. To close the auger when thus filled I simply rotate the auger-shaft in a reverse way far enough to close the opening at the bottom, so that the sand or loose ground in the auger can be elevated therewith to the top of the bore and emptied. When the bottom of the inner cylinder is in contact with the stop *h* on the bottom of the outer cylinder, the openings in the cylinders coincide and let the sand and loose ground enter as the two cylinders are jointly rotated, and half a revolution of the auger-shaft in a reverse way will allow the outside cylinder to remain stationary, while the inner cylinder is turned half-way round, as required, to close the opening in the outside cylinder, as shown in Fig. 3.

D^3 is a fixed collar or flange on the tube D^2. K is a loose collar on the same tube, and has arms M projecting outward and upward.

M' is a rope fixed to the arms M for the purpose of raising and lowering the auger on the shaft. The device allows the shaft and auger to be rotated without twisting the rope.

r is a cutter that has a stiff back joint, and is pivoted on top of the bottom of the inside

cylinder G by means of a bearing S, fixed to the bottom, in such a manner that the point of the cutter will be thrust out beyond the circumference of the outer cylinder A when the auger is opened and rotated to bore in the ground, and will enlarge the bore, as required, to facilitate raising and lowering the auger and tubing the bore. A reverse motion of the shaft closes the auger and draws the point of the cutter inside of the auger.

X is a collar fixed to the under side and center of the arched frame D and provided with a curved slot Y.

Z is a collar fixed to the top and center of the arched frame J and provided with a pin Z′ or vertical projection that enters the curved slot Y, as required, to aid the stop device *h h′* at the bottom of the auger in restricting the rotary motion of the inside cylinder relative to the outside cylinder.

I claim as my invention—

1. A well-auger comprising an open-topped cylinder having a fixed bottom extending over about two-thirds of the space, a cutting-edge on said bottom extending from the center to the circumference, an arched frame fixed to the top, and a rotating shaft angular at its lower end extending through a bearing in said frame, a concentric minor cylinder inside of the main cylinder and also provided with a semicircular bottom and an arched frame at its top, and a fixed tube extending from the center of the bottom to the center of the bar or frame at its top to admit and engage the shaft, a stop on the bottom of the outer cylinder to engage a projection on the bottom of the inner cylinder, and each cylinder provided with an opening at its lower end to admit ground in the manner set forth, for the purposes stated.

2. The cylinder A, having a fixed bottom B, cutter C, stop *h*, fixed frame D, and an opening at its lower end, and the cylinder G, having a corresponding opening and bottom, and a fixed frame J, fixed tube J^2, stop *h′*, and shaft F, constructed and combined substantially as shown and described, for the purposes stated.

3. The self-adjusting cutter *r*, having a stiff back joint, in combination with the cylinders A and G, to operate in the manner set forth, for the purposes stated.

JOSEPH GOAR.

Witnesses:
A. E. JAY,
N. G. PRATT.