May 21, 1935. E. VERLINDEN 2,002,163

REROLLING SPEED CONTROL FOR MUSICAL INSTRUMENTS

Filed May 13, 1933

FIG. 1

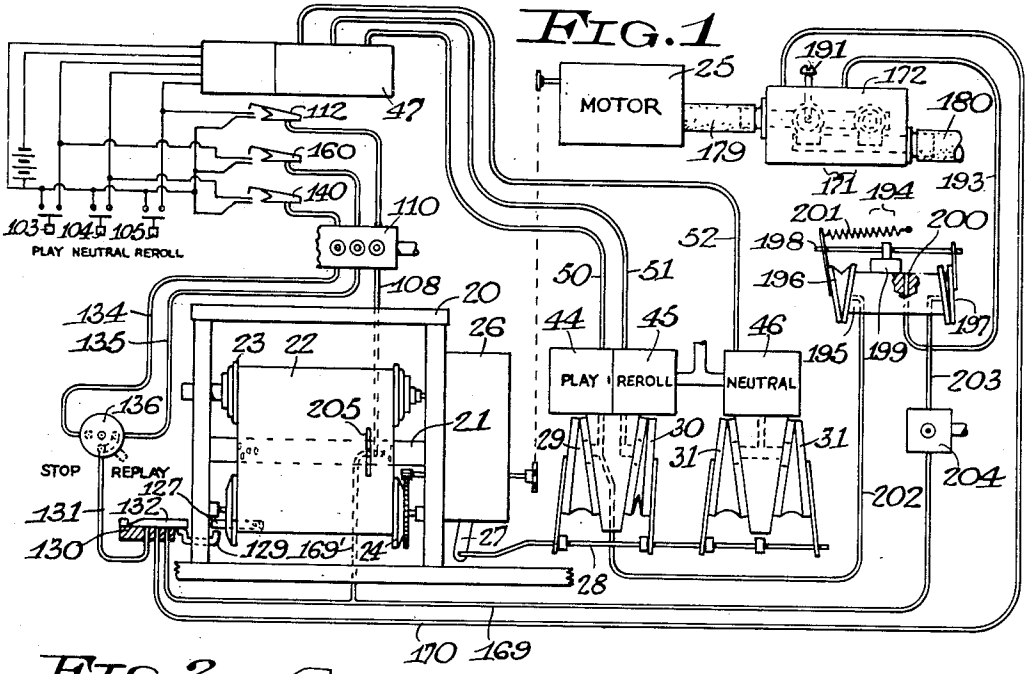

FIG. 2

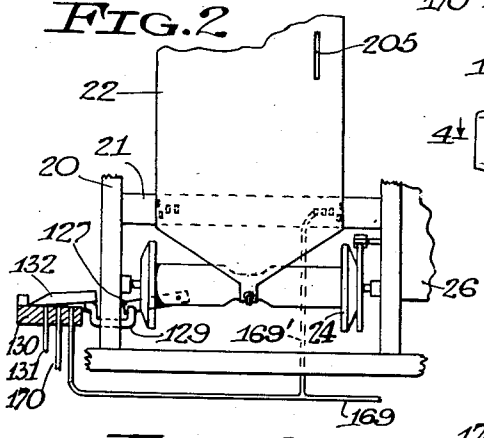

FIG. 3

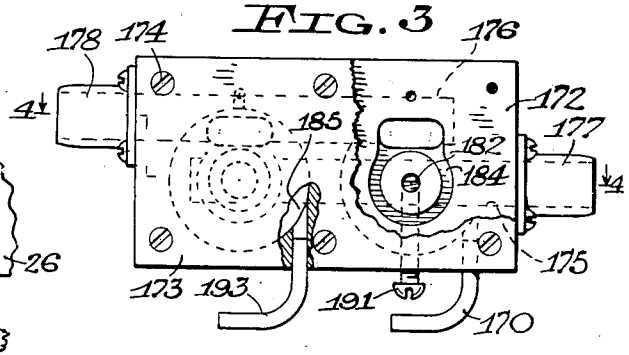

FIG. 4

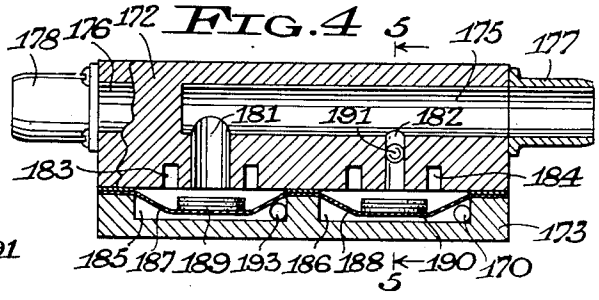

FIG. 5

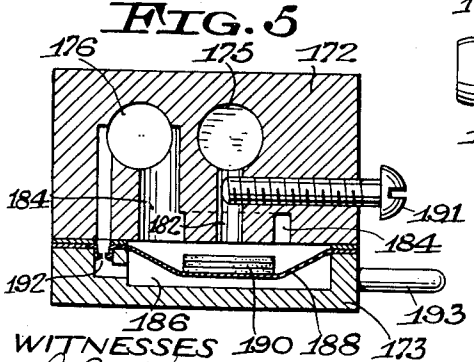

WITNESSES
L. E. Kilian
C. L. Neal

INVENTOR
Edmund Verlinden
By R. S. & C. Caldwell
ATTORNEY

Patented May 21, 1935 2,002,163

UNITED STATES PATENT OFFICE

2,002,163

REROLLING SPEED CONTROL FOR MUSICAL INSTRUMENTS

Edmond Verlinden, Milwaukee, Wis.

Application May 13, 1933, Serial No. 670,822

10 Claims. (Cl. 84—133)

The invention relates to means for automatically controlling the speed of a music sheet in an automatic musical instrument, and more particularly the rerolling speed of the music sheet.

When the music sheet of an automatic musical instrument is rerolled at a high uniform speed, it comes to a sudden and noisy stop which places the player mechanism and the music sheet under severe stresses and occasionally causes tearing of the music sheet at the retaining tab and elsewhere. To avoid these objections, slow rerolling has been resorted to, but this unduly lengthens the rerolling interval.

An object of the present invention is to provide means for rerolling the music sheet at high speed to conserve time and to automatically decelerate the music sheet near the end of rerolling to bring the music sheet to a smooth quiet stop, preventing damage to the player mechanism and avoiding tearing of the music sheet.

The invention further consists in the several features hereinafter described and claimed.

In the accompanying drawing,

Fig. 1 is a schematic diagram of an automatic musical instrument embodying the reroll speed controlling means of the invention;

Fig. 2 is a front view of the tracker-box and music sheet at the end of rerolling;

Fig. 3 is a bottom plan view of a motor speed controlling device of the invention, parts being broken away and parts being shown in section;

Fig. 4 is a sectional view of the speed-controlling device taken on the line 4—4 of Fig. 3, and

Fig. 5 is a sectional view taken on the line 5—5 of Fig. 4.

In this drawing, the numeral 20 designates a tracker-box provided with a tracker-bar 21 over which a perforated music sheet 22 is drawn from a music spool 23 onto a take-up spool 24. The movement of the music sheet is effected by means of a suction-operated motor 25 acting through a transmission mechanism 26, both of well known construction. To effect playing, the take-up spool 24 is rotated to draw the music sheet forward over the tracker-bar; and to effect rerolling, the music roll is rotated in the opposite direction at a higher speed. The transmission also has a neutral position, so that when desired the music sheet and operating spools may be held stationary; and the usual braking means are provided in order that no slack will develop in the music sheet under operating conditions. The transmission mechanism includes a shifting lever 27 to the lower end of which is pivotally connected a shifting rod 28 actuated by pneumatic means, hereinafter described, for placing the transmission mechanism in a playing, rerolling or neutral position, as disclosed in my United State Letters Patent No. 1,874,663, issued August 30, 1932.

The transmission shifting means includes pneumatics 29, 30, and 31 which are operatively connected with the shifting rod 28, and which are deflated under suction to move the rod. The pneumatic 29 moves the rod in one direction to playing position, and the pneumatic 30 moves the rod in the other direction to rerolling position. The pair of pneumatics 31 deflate simultaneously to move the rod from either playing or rerolling position to a neutral position. The application of suction to the pneumatics 29, 30, and 31 is controlled by primary actions 44, 45, and 46, respectively, which are selectively controlled in any suitable manner, as in the above patent or in my copending application, Serial No. 670,821, filed May 13, 1933.

The primary actions 44, 45, and 46 are connected by ducts 50, 51, and 52, respectively, to a valve device 47 by which the ducts are selectively vented to operate the primary actions. The valve device 47 is under both manual and automatic control as in the above disclosures. The manual control includes a group of circuit-closers or push-buttons 103, 104, 105, respectively labeled "Play", "Neutral" and "Reroll", connected by suitable circuits to the valve device 47. The automatic control includes pneumatically operated circuit-closers 160, 140, and 112 connected in parallel with the circuit-closers 103, 104, and 105, and controlled through a primary action 110. A duct 108 controlling the "reroll" circuit-closer 112 leads to the tracker-bar 21 to be uncovered by a "reroll" perforation in the music sheet, so as to effect rerolling after the music sheet is played.

The take-up spool 24 is provided at one end with a pivoted trigger plate 127 which is movable outwardly when uncovered by the narrowed end of the music sheet, as in the above patent, into proximity with an arm of a rock-shaft 129 journalled in the side wall of the tracker box. A stationary valve seat member 130 is arranged adjacent the outer end of the rock-shaft and is provided with three ports connected by ducts 131, 169, and 170. A valve 132 is pivotally mounted on the valve seat member 130 and normally closes the ports in which suction normally exists. The outer end of the rock-shaft is provided with an arm engageable with the valve 132 to open the ports and thus expose the ports to

atmospheric pressure. This opening movement of the valve 132 is effected at the conclusion of the rerolling operation by the rock-shaft 129, which is engaged and swung by the then projecting trigger plate 127. When the take-up spool turns in playing direction, the trigger plate slides by the rock-shaft and is held at its inner position as soon as it is covered by the music sheet.

The duct 131 is connected to a two-way valve 136 by which it is placed in selective communication with other ducts 134 and 135, as in the above disclosures. The ducts 134 and 135 lead to different units of the primary action 110 controlling the pneumatically operated circuit-closers 140 and 160, respectively.

The suction-operated motor 25 is under the control of a valve action 171 which permits the music sheet to reroll at high speed and which slows down the motor near the end of rerolling to bring the music sheet to a smooth noiseless stop. The valve action comprises a rectangular valve body 172 to the flat bottom face of which is secured a plate 173 by screws 174. The valve body is provided with a pair of parallel bores 175 and 176 opening at opposite ends of the valve body in register with nozzles 177 and 178 secured to the valve body. The nozzle 177 is connected with the motor by a duct 179, and the nozzle 178 is connected with an exhauster, not shown, by a duct 180. Spaced vertical bores 181 and 182 connect the bore 175 with the flat bottom face of the valve body where they form ports. The port-forming ends of the bores 181 and 182 are surrounded by channels 183 and 184 respectively, which are cut into the valve body and which define circular valve seats around the ports. The channels 183 and 184 communicate with the bore 176 connected with the exhauster. The bottom plate 173 is provided in its upper face with shallow circular recesses 185 and 186 registering with the bores 181 and 182 respectively, but separated therefrom by flexible diaphragms 187 and 188 respectively, forming chambers with the recesses. The diaphragms 187 and 188 carry disk valves 189 and 190 respectively, adapted to close the ports at the lower ends of the bores 181 and 182 respectively, as hereinafter described.

When the valves 189 and 190 are open, the bores 175 and 176 are in communication by way of the bores 181 and 182 and channels 183 and 184, so as to permit the application of suction to the motor. The bore 181 is sufficiently large to permit the motor to operate at normal speed, while the bore 182 is somewhat smaller and is adjustably throttled by a screw 191, so as to reduce the speed of the motor when the valve 189 is closed and the valve 190 is open.

The spaces above the diaphragms 187 and 188 are under suction, being in communication with the bore 176, and the chambers below the diaphragms are also placed under suction from the same source by respective bleed openings 192, shown in Fig. 5. Under this condition the valves 189 and 190 drop to open position by their weight and the motor operates at normal speed. Provision is made for admitting atmospheric pressure into the diaphragm chambers 185 and 186, which will lift the diaphragms and cause the valves to close. The closing of the valve 189 will reduce the motor speed and the closing of both valves will stop the motor. By shutting the diaphragm chambers from atmospheric pressure, suction will again be applied to these chambers through the bleed openings 192 to cause the valves to open.

The diaphragm chamber 186 is vented to atmosphere by the duct 170 leading to the valve 132 controlled by take-up spool at the conclusion of rerolling. The diaphragm chamber 185 is vented to atmosphere by a duct 193 leading to a vent valve 194 of well known construction. The vent valve 194 comprises a block 195 having deflatable pneumatics 196 and 197 at opposite ends connected by a rod 198 secured to a slide valve 199 bearing on the top face of the block 194 to control a vent opening 200 therein. The valve 199 is normally urged to closed position by a spring 201. During playing of the music sheet the pneumatic 196 is deflated to valve-closing position by a duct 202 connected to the "play" pneumatic 29 of the transmission shifting device. The pneumatic 197 is deflated to valve-opening position by a duct 203 connected to a primary action 204 controlled by the duct 169 leading to the tracker-box valve 132. The duct 169 has a branch 169' leading to an opening in the tracker-bar 21 and uncovered by an opening 205 in the music sheet. This opening, as seen in Fig. 2, is near the narrowed end of the music sheet, so as to vent the ducts 169' and 169 just before the end of rerolling.

In operation, a music sheet or roll is placed in the tracker-box and is hooked to the take-up spool 24 in the usual manner, the tracker transmission at this time being in neutral position. The operator then momentarily depresses the "play" circuit-closer 103 to effect the deflation of the "play" pneumatic 29 of the transmission shifting device, as in the above patent or application, thereby shifting the tracker transmission to playing position. The motor 25 then drives the take-up spool 24 to effect the travel of the music sheet in playing direction.

At the conclusion of playing, a perforation in the music sheet vents the duct 108 to operate the "reroll" circuit-closer 112 and thereby deflate the "reroll" pneumatic 30 to shift the transmission to rerolling position, whereupon the motor drives the music spool 23 at high speed in reverse direction to reroll the music sheet. Near the end of rerolling, the perforation 205 in the music sheet vents the ducts 169' and 169, operating the primary action 204, which deflates the pneumatic 197 to shift the valve 199 and thereby vent the duct 193. Atmospheric pressure is thus admitted to the diaphragm chamber 185 of the valve action 171, causing the valve 189 to close the bore 181 and slow down the motor, the suction on the motor being then limited by the throttled bore 182. A short time later, and before the venting valve 194 has an opportunity to close, the narrowed end of the slowly moving music sheet exposes the trigger plate 127 on the take-up spool and permits the plate to move outwardly for swinging the rock-shaft 129, which lifts the valve 132 and opens the ducts 131, 169 and 170 to atmosphere. The duct 169 being vented, the venting valve 194 remains open, so that the valve 189 of the valve action remains closed. The venting of the duct 170 causes the valve 190 of the valve action to close, so that the motor comes to a smooth noiseless stop avoiding stress on the music sheet and on the operating mechanism. The music sheet remains hooked on the take-up spool and may either be replayed or removed.

If the "stop-replay" valve 136 is placed in "stop" position, the duct 131 communicates with the duct 134 to operate the "neutral" circuit-closer 140 and

thus shift the transmission to neutral position. The music sheet then settles to its relaxed position and the valve 132 closes, permitting the valve 190 of the valve action to open and allowing the motor to operate at slow speed until the venting valve 134 slowly closes, whereupon the motor will resume its normal speed.

If automatic replaying of the music sheet is desired the "stop-replay" valve 136 is moved to "replay" position when the music sheet is installed or at any time prior to the conclusion of rerolling. The opening of the valve 132 by the trigger plate then admits atmospheric pressure into the duct 135 to operate the "play" circuit-closer 139 and thus shift the tracker-box transmission to playing position, after which the valve 132 closes. The suction applied to the "play" pneumatic 29 is also applied through the duct 202 to the pneumatic 195 of the venting valve 194, thus deflating the latter pneumatic and moving the slide valve 199 to close the port 200 of the duct 153. The diaphragm chamber 185 is thereby again placed under suction through the bleed opening 192, and the valve 189 drops, opening the bore 181 and causing the motor to run at normal speed. The venting valve 194 remains closed during the playing of the music sheet.

The smooth stopping of the motor at the end of rerolling permits easy shifting of the transmission to neutral or replaying position. If the music sheet is removed from the tracker-box, the duct 169' is vented and the motor therefore runs at idling speed until another music sheet is placed in the tracker-box to cover the tracker-bar ports.

While the motor control is here shown to vary the motor speed during rerolling it will be obvious that it can also be used to vary the motor speed during playing to produce different tempos.

What I claim as new and desire to secure by Letters Patent is:

1. In an automatic musical instrument using a music sheet, the combination of a pneumatic motor for effecting the travel of the music sheet, a throttle valve for said motor having a plurality of air openings through which the air flow divides, a valve member for at least one of said openings, and means controlled by the music sheet for actuating said valve member to vary the speed of the motor.

2. In an automatic musical instrument using a music sheet, the combination of a pneumatic motor for effecting the travel of the music sheet, a throttle valve for said motor having a plurality of valve openings through which the air flow divides, valve means for said openings, and means controlled by the music sheet for actuating one or more of said valve members to vary the speed of the motor.

3. In an automatic musical instrument using a music sheet, the combination of a tracker-box having a take-up spool and a tracker-bar, said tracker-bar having a duct to be uncovered by a perforation in the music sheet near the forward end of said sheet, a valve having a duct, means co-operating with said take-up spool for opening said valve at the conclusion of rerolling, a motor for rerolling the music sheet, means controlled by the uncovering of said tracker-bar duct for reducing the motor speed near the end of rerolling, and means controlled by the opening of said valve at the end of rerolling for stopping the motor.

4. A speed controlling valve for a pneumatic motor, comprising a valve body having a passage adapted to be connected to an exhauster and another passage adapted to be connected to the motor, there being a plurality of valve openings connecting said passages, valves for said openings to control the extent of air flow between the passages, and pneumatic means for operating said valves.

5. A speed controlling valve for a pneumatic motor, comprising a valve body having a passage adapted to be connected to an exhauster and another passage adapted to be connected to the motor, there being a plurality of valve openings extending from said last-named passage to a face of the valve body and other openings extending from said first-named passage to said face, a cover secured to said face and having recesses registering with said valve openings, each recess also registering with one of the other openings, a diaphragm for each recess forming therewith a chamber and separating said chamber from the corresponding valve opening, a valve member on each diaphragm for covering or exposing the corresponding valve opening, means including a bleed opening for applying suction from said first-named passage to each diaphragm chamber, and means for venting said chamber to atmosphere for closing a selected number of said valve members and thereby varying the effective duct area of the valve.

6. In an automatic musical instrument using a music sheet, the combination of a tracker-bar having a port to be uncovered by a perforation in the music sheet, means for effecting the travel of the music sheet, and means controlled by the uncovering of said tracker-bar port for reducing the rate of travel of the music sheet while said sheet is moving in the same direction.

7. In an automatic musical instrument using a music sheet, the combination of means for effecting the travel of the music sheet in playing and returning directions, means controlled by the music sheet for reducing the rate of travel of the music sheet near the end of its return travel, and means for bringing the slowly moving music sheet to a stop at the end of its return travel.

8. In an automatic musical instrument using a music sheet, the combination of a tracker-bar having a duct to be uncovered by a perforation in the forward end portion of the music sheet, a take-up spool for the music sheet, a valve having a pair of ducts one of which communicates with said first-named duct, means co-operating with the take-up spool for opening said valve at the conclusion of rerolling, mechanism for rerolling the music sheet, means controlled by the uncovering of said tracker-bar duct for reducing rerolling speed near the end of rerolling, and means controlled by the opening of said valve at the end of rerolling to stop said mechanism.

9. In an automatic musical instrument using a music sheet, the combination of a tracker bar having a port to be uncovered by a perforation in the music sheet, a motor for effecting the travel of the music sheet, and means for reducing the motor speed when said tracker-bar port is uncovered by the music sheet, said port being exposed by the removal of the music sheet to thereby limit the motor speed if the motor is operated while the music sheet is out of its operative position with respect to the tracker bar.

10. In an automatic musical instrument using a music sheet, the combination of a pneumatic motor for effecting the travel of the music sheet, a pair of air valves for said motor, one of which when closed reduces motor speed and both of

which when closed stop the motor, a take-up spool and tracker bar for said music sheet, said tracker bar having a duct to be uncovered by a perforation in the music sheet near the forward end of the sheet, a stop valve having two ducts one of which communicates with said tracker-bar duct, means cooperating with said take-up spool for opening said stop valve ducts at the conclusion of rerolling, means controlled by the uncovering of said tracker-bar duct for closing said first-named air valve to reduce motor speed near the end of rerolling, and means controlled by the opening of said stop valve at the end of rerolling for closing the other air valve to stop the motor, said stop valve by its duct connection with the tracker-bar duct holding said first-named air valve closed.

EDMOND VERLINDEN.