(12) UK Patent Application (19) GB (11) 2 234 715 (13) A

(43) Date of A publication 13.02.1991

(21) Application No 8918053.3

(22) Date of filing 08.08.1989

(71) Applicants
Teresa Ann Heap
Secret Garden, 5 Church Path, Clophill, Beds., MK45 4BP, United Kingdom

Roland Grant Heap
Secret Garden, 5 Church Path, Clophill, Beds, MK45 4BP, United Kingdom

(72) Inventors
Teresa Ann Heap
Roland Grant Heap

(74) Agent and/or Address for Service
Teresa Ann Heap
Secret Garden, 5 Church Path, Clophill, Beds., MK45 4BP, United Kingdom

(51) INT CL[5]
B43L 7/10

(52) UK CL (Edition K)
B6P PE

(56) Documents cited
GB 0620902 A

(58) Field of search
UK CL (Edition K) **B6P PE**
INT CL[5] **B43L**

(54) **Multi-purpose drawing instrument**

(57) A drawing instrument has two base-sections one of which includes a protractor, the other having another protractor or angle marks. Two detachable arms are provided so that the device may be used to draw a variety of shapes and be used against a drawing board traverse 19. A variant of the instrument has fixed location points instead of slots 14.

Additional attachments may be added to the basic instrument to extend the shape range. Figure repertoire includes: squares, rectangles, oblongs, triangles, parallelograms, trapezoids, conic-sections, circles, polygons, spirals, and ellipses.

Fig 3 1

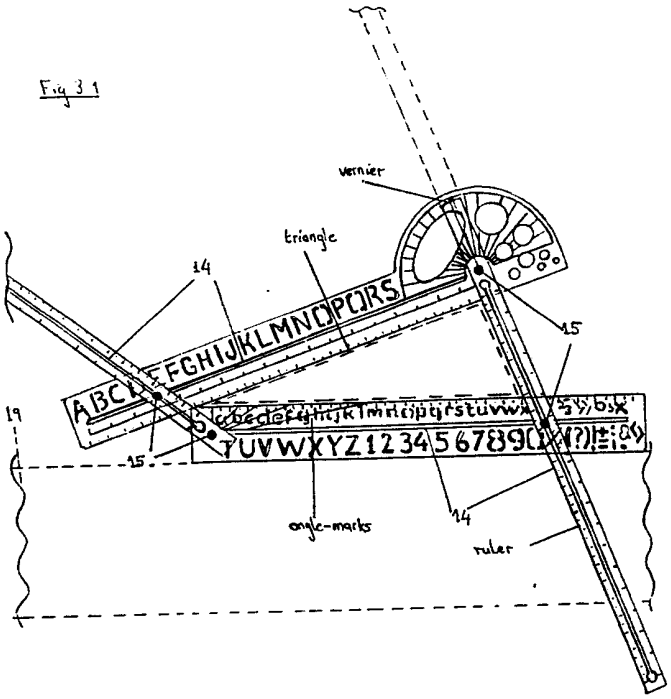

At least one drawing originally filed was informal and the print reproduced here is taken from a later filed formal copy.

The claims were filed later than the filing date within the period prescribed by Rule 25(1) of the Patents Rules 1982.

GB 2 234 715 A

Fig 1

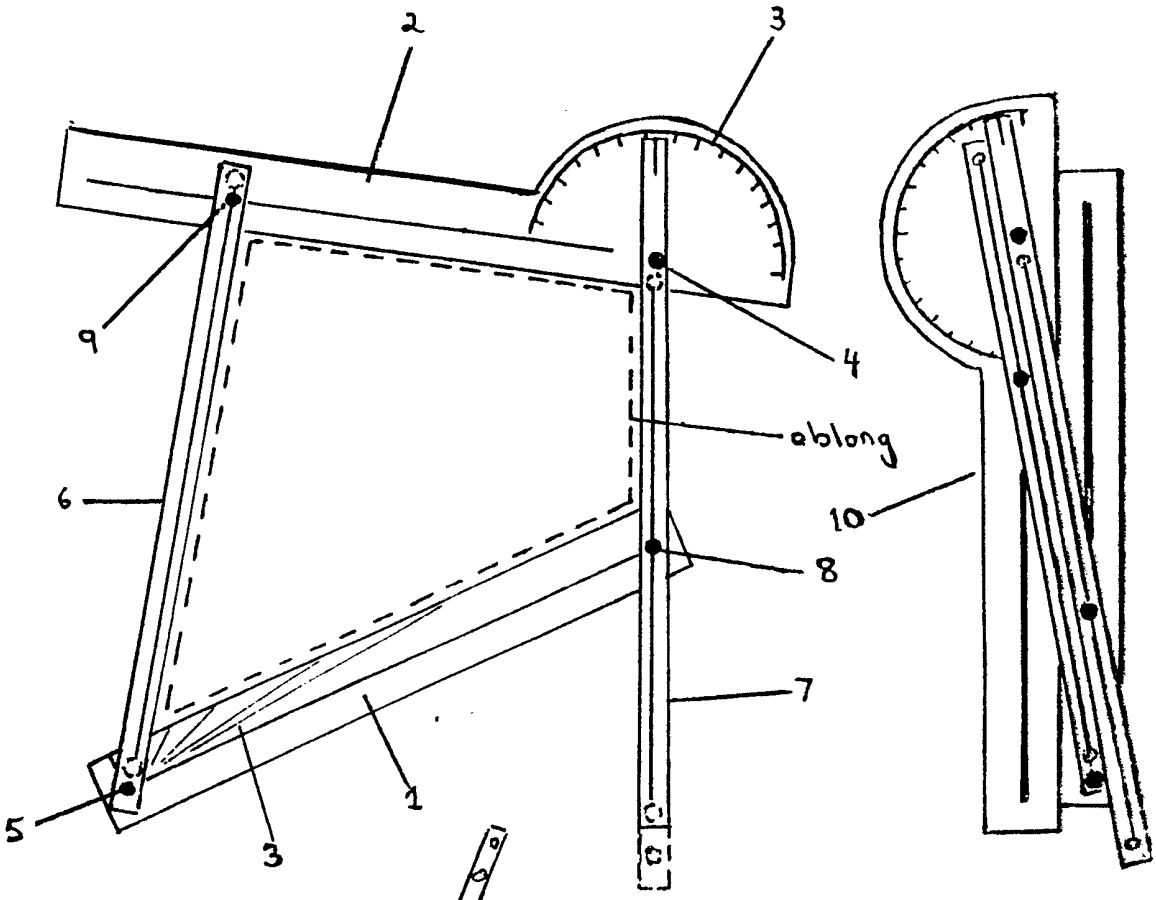

Fig 2.1

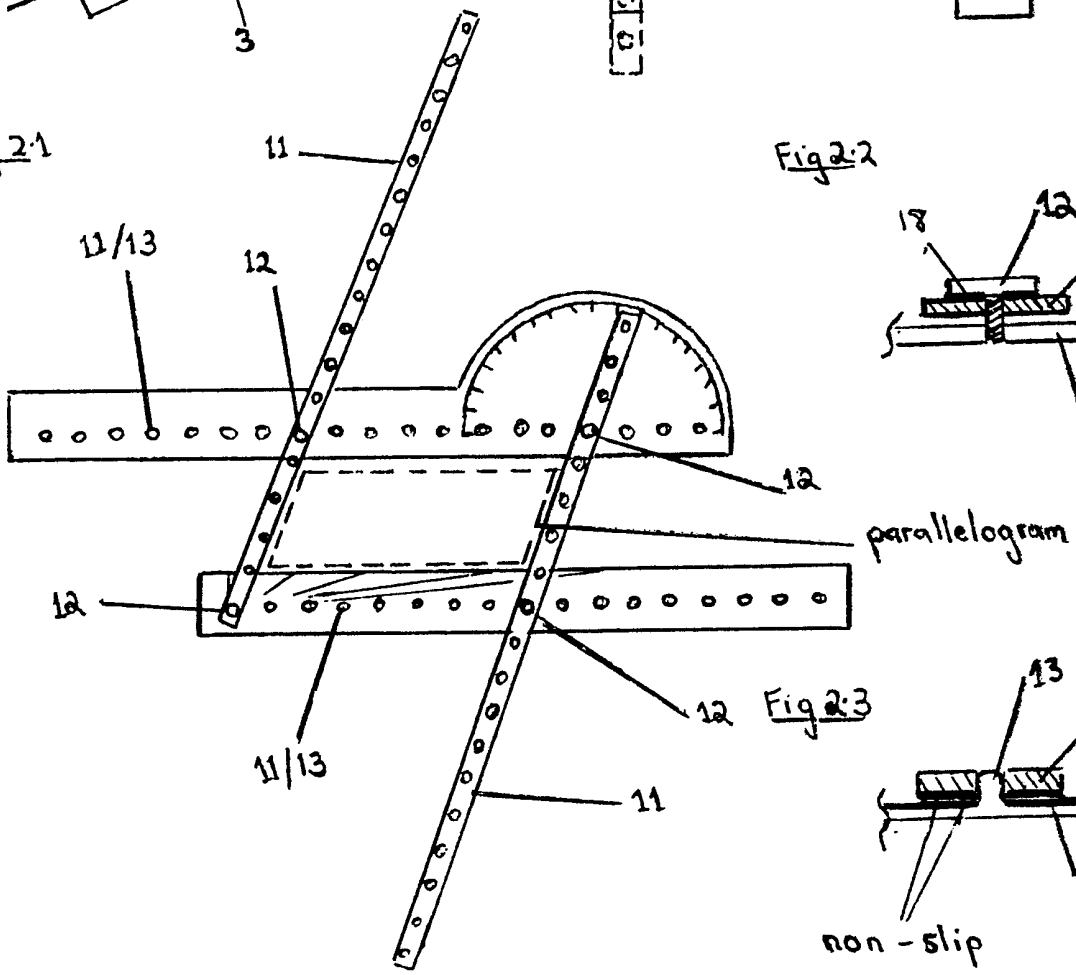

Fig 2.2

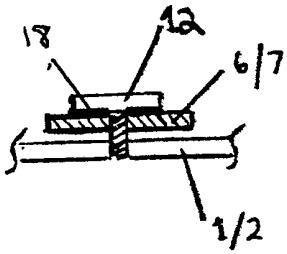

Fig 2.3

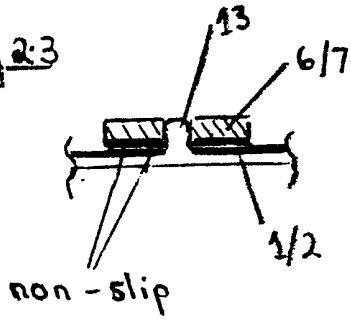

Fig 3.1

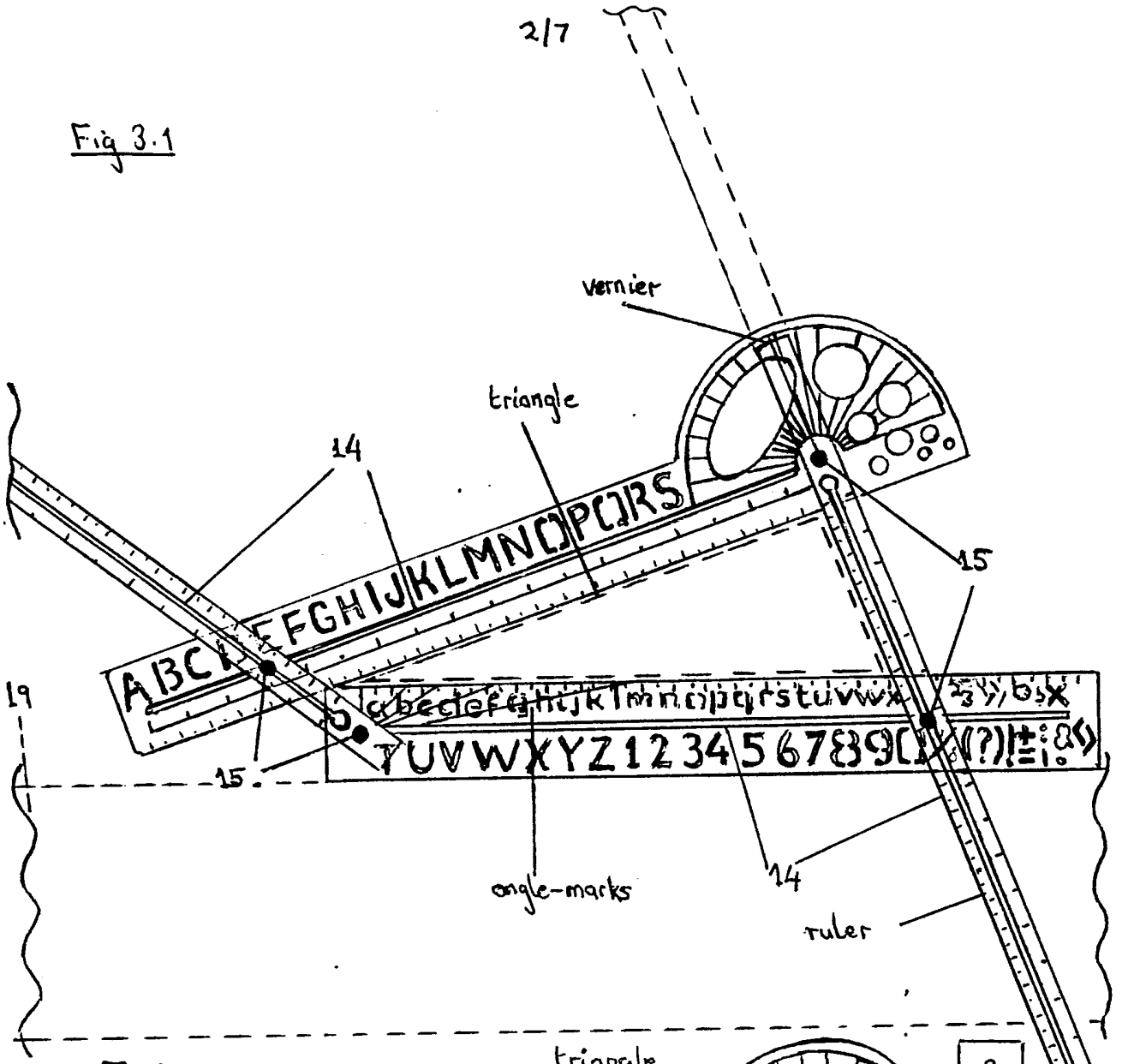

Fig 3.2

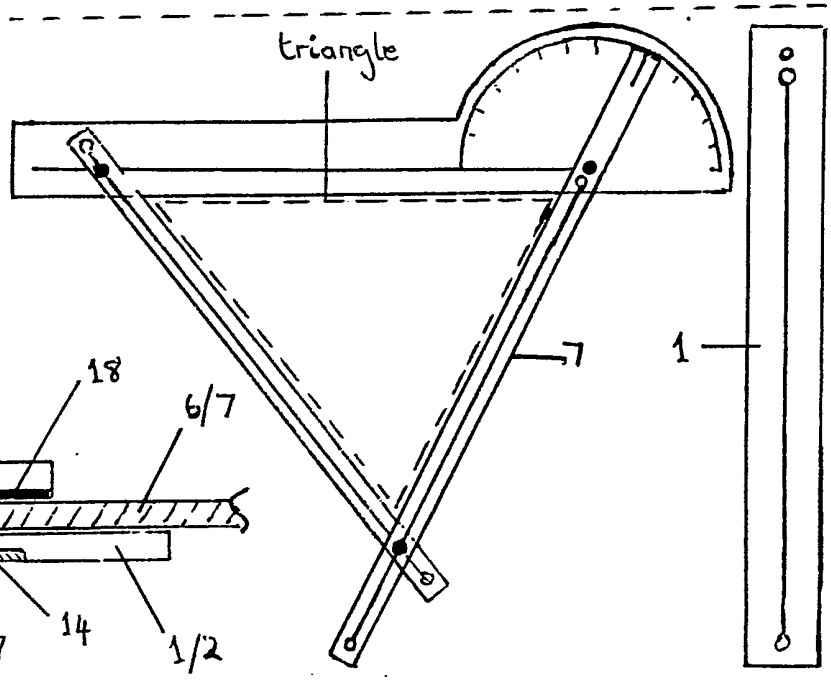

Fig 3.3

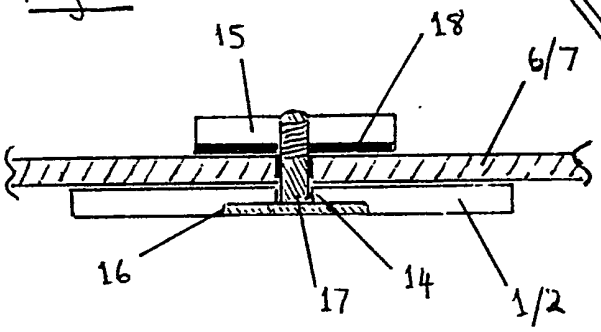

Fig 4·1

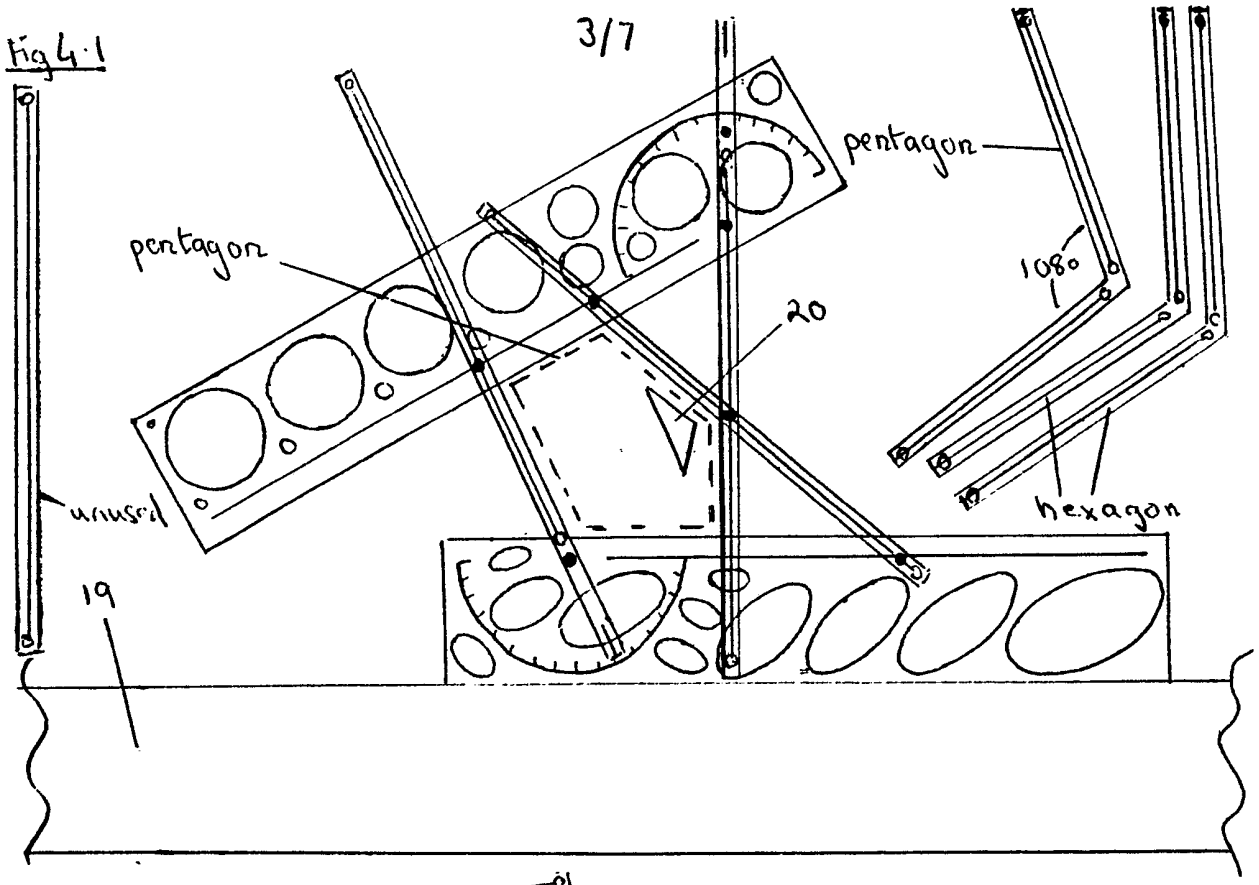
pentagon
pentagon
108°
20
hexagon
unusual
19

Fig 4·2

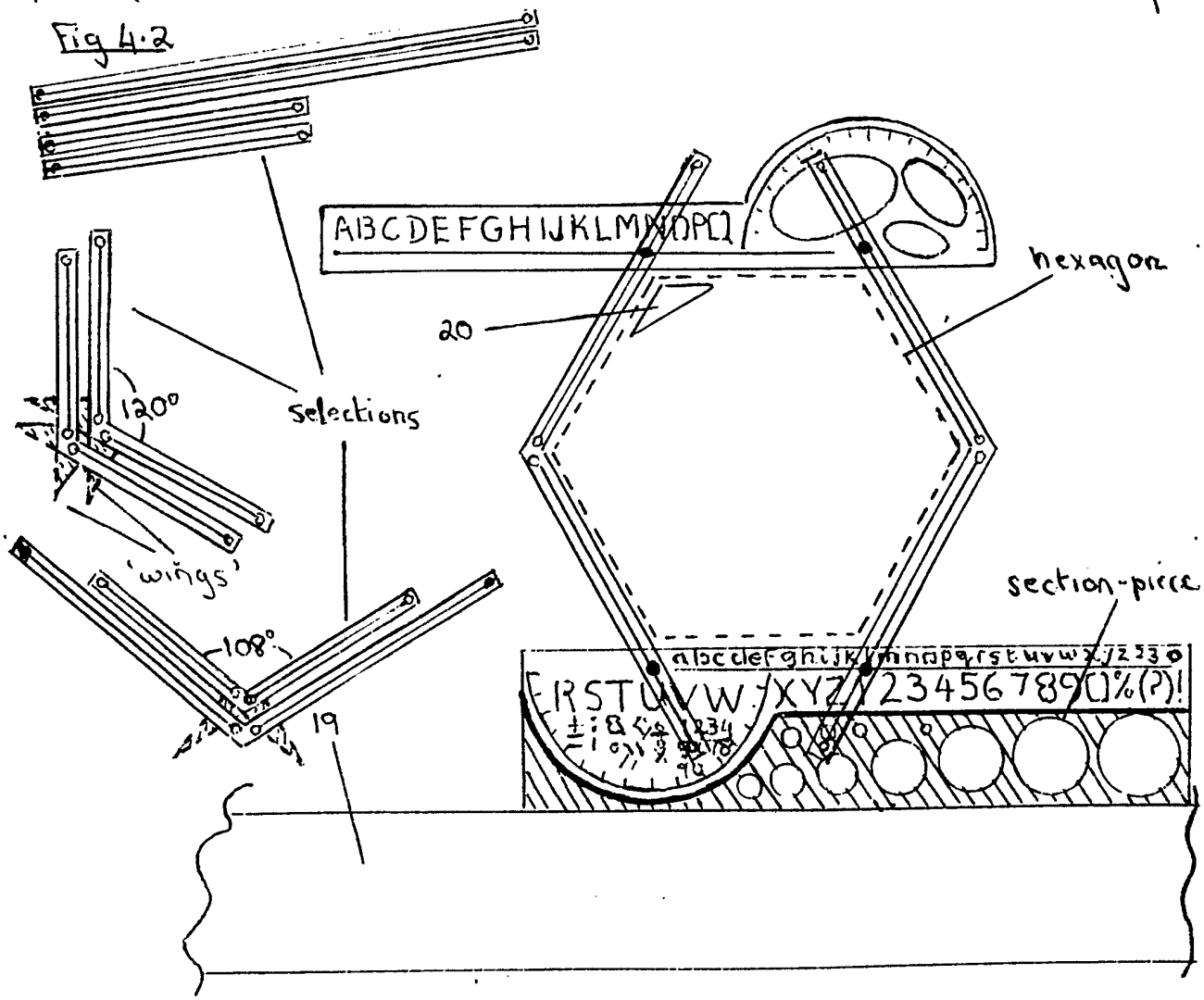
ABCDEFGHIJKLMNOPQ
hexagon
20
120°
selections
'wings'
108°
19
section-piece
abcdefghijklmnopqrstuvwxyz23
ERSTUVW XYZ 23456789()%(?)!

Fig 5.1

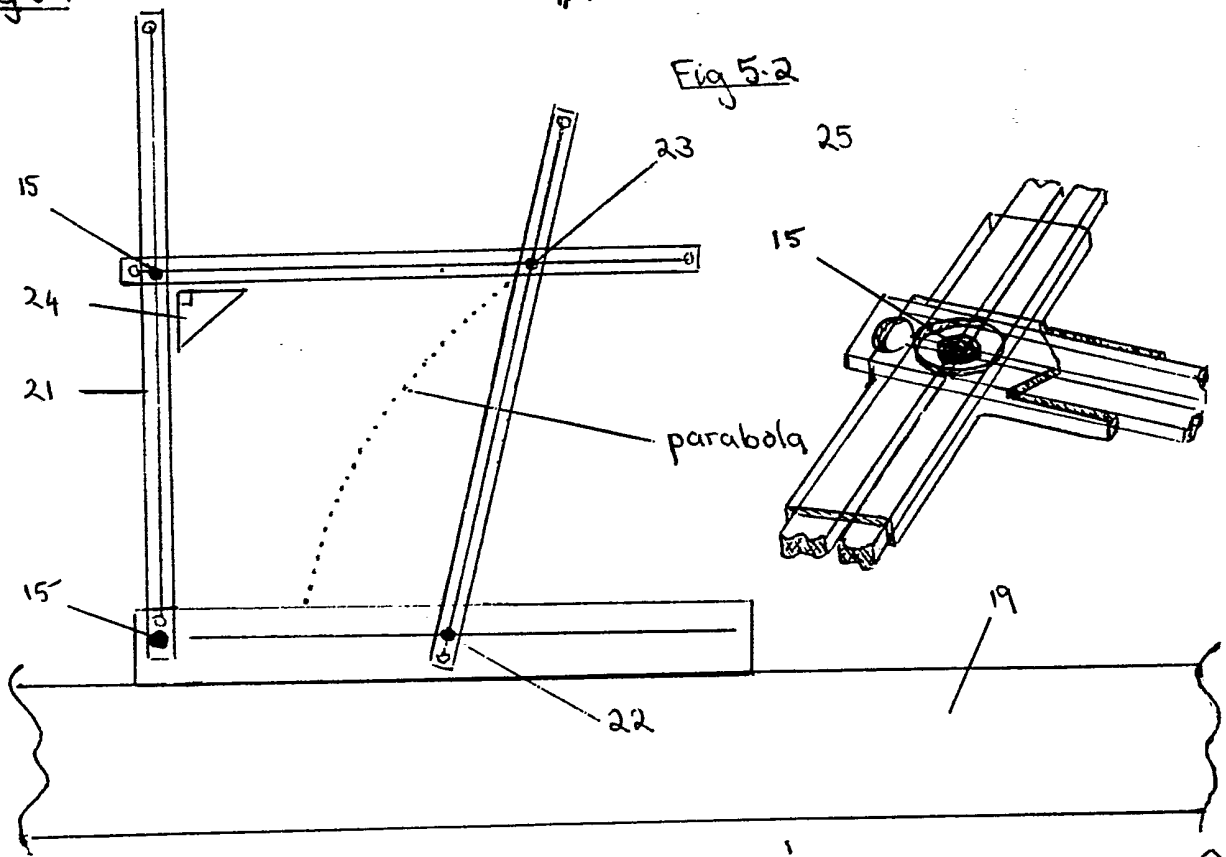

Fig 5.2

Fig 6.1

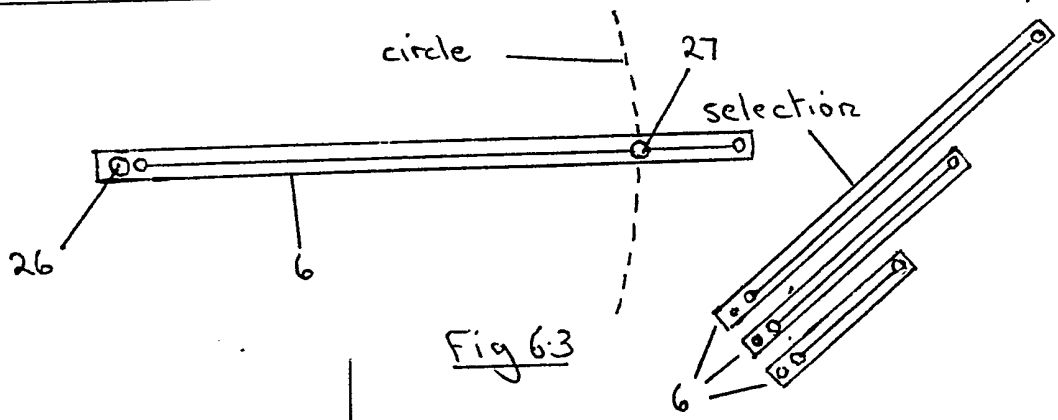

Fig 6.3

Fig 6.2

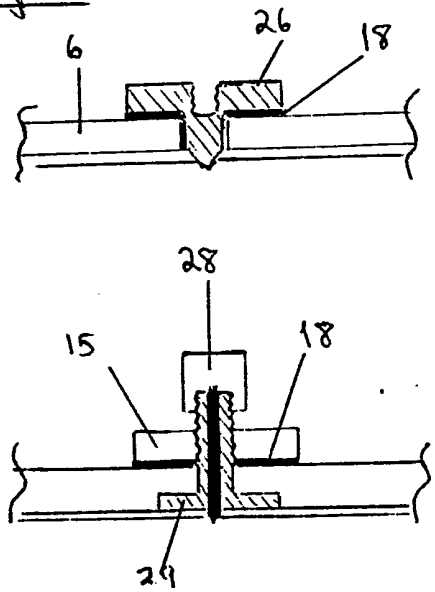

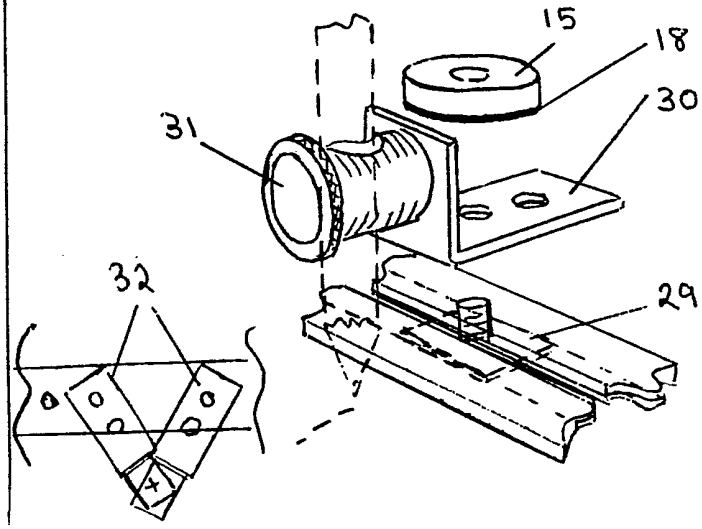

Fig 7.1

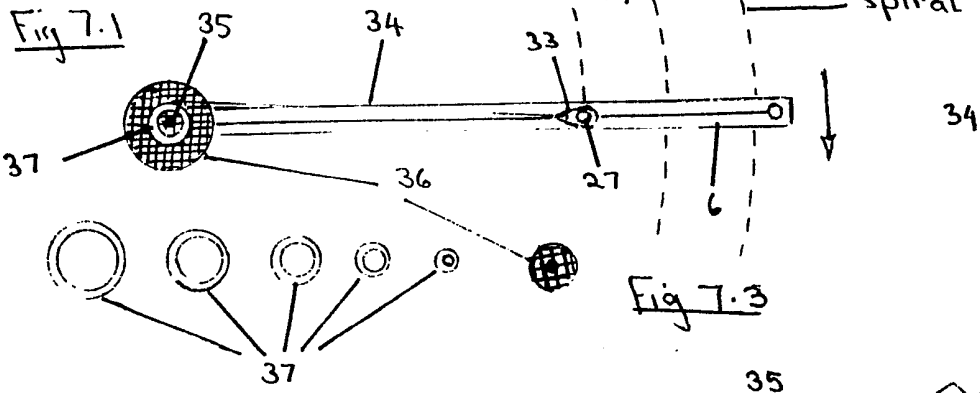

Fig 7.3

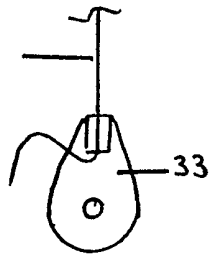

Fig 7.2

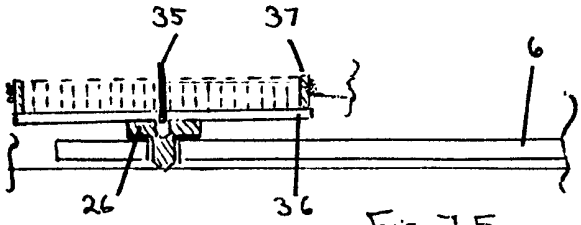

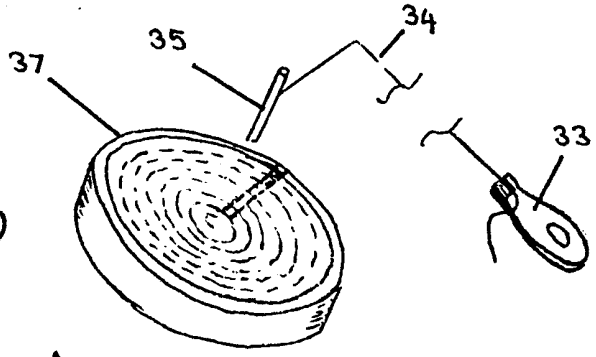

Fig 7.4

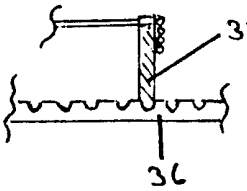

Fig 7.5

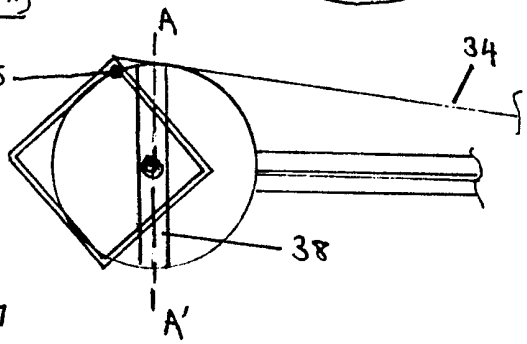

Fig 7.6

A - A'

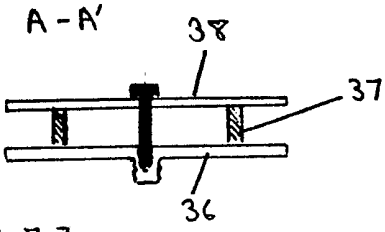

Fig 7.7

i)

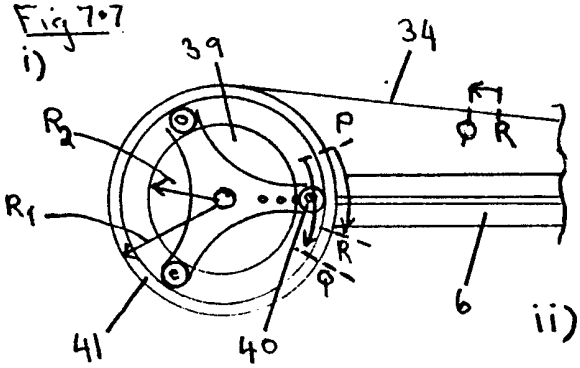

i) $QR = 2\pi(R_1 - R_2)$

ii) $QR = 2\pi R_3\left(1 - \frac{R_2}{R_1}\right)$

ii)

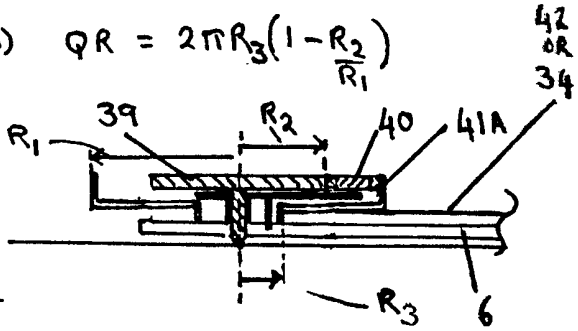

Fig 7.8

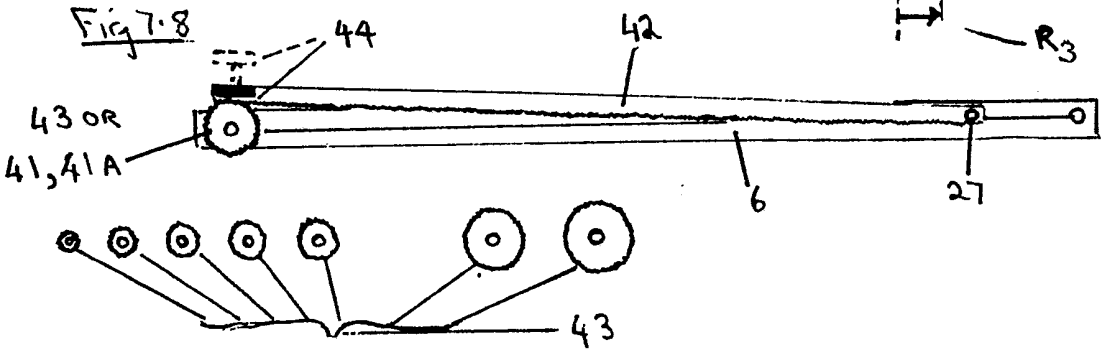

Fig 8.1

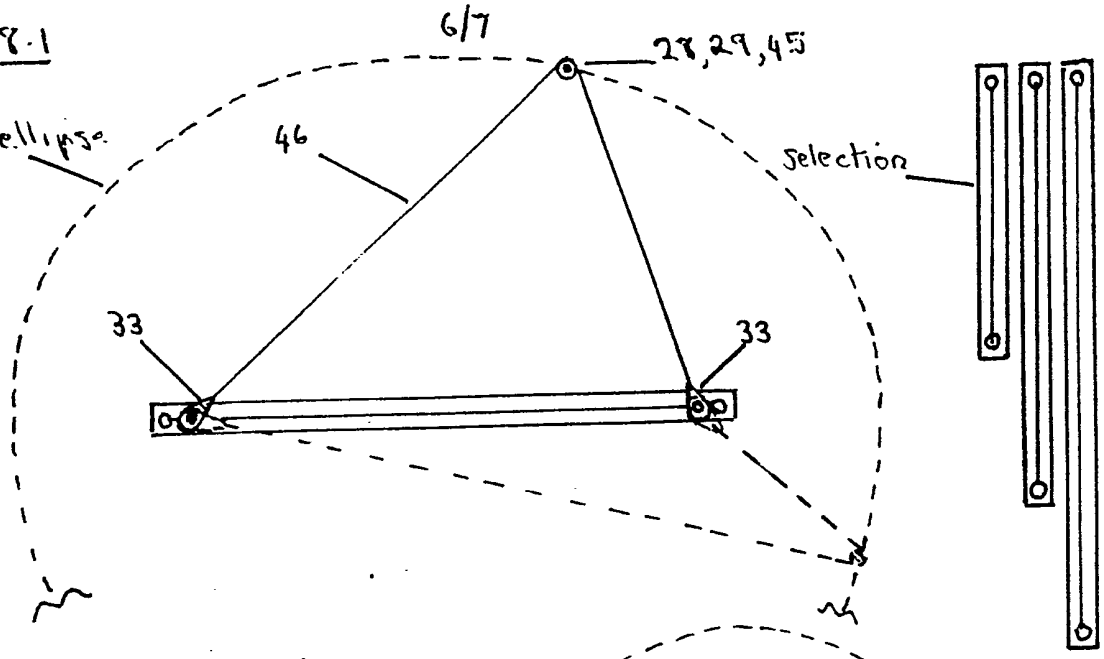

Fig 8.2

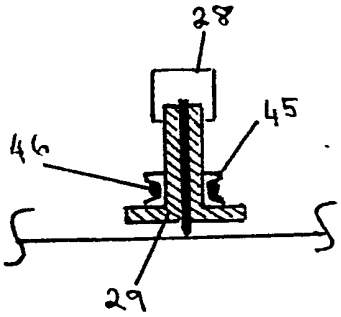

Fig 8.3

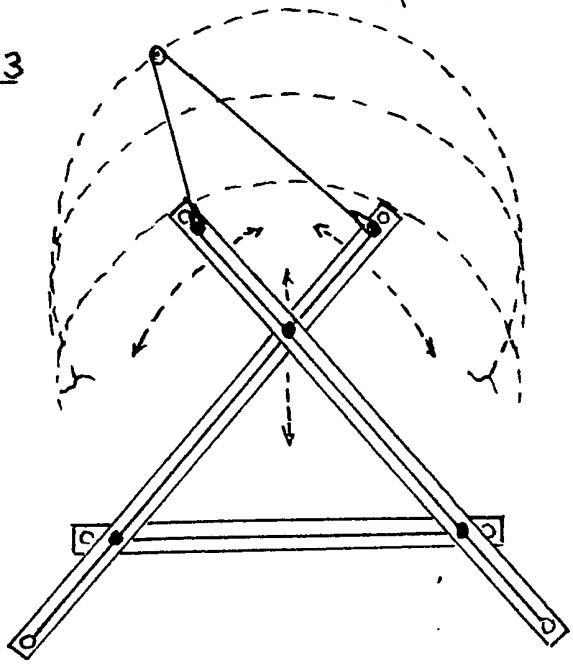

Fig 8.4

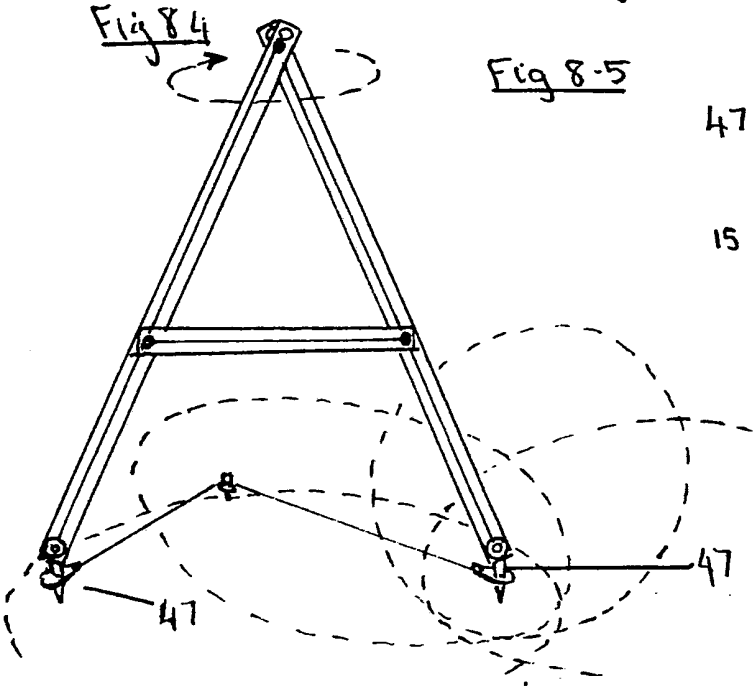

Fig 8.5

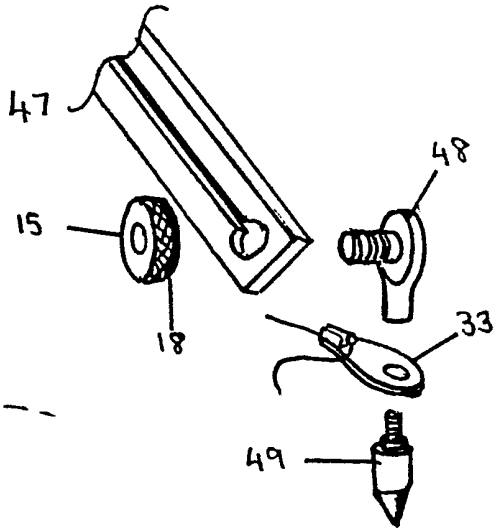

Fig 9

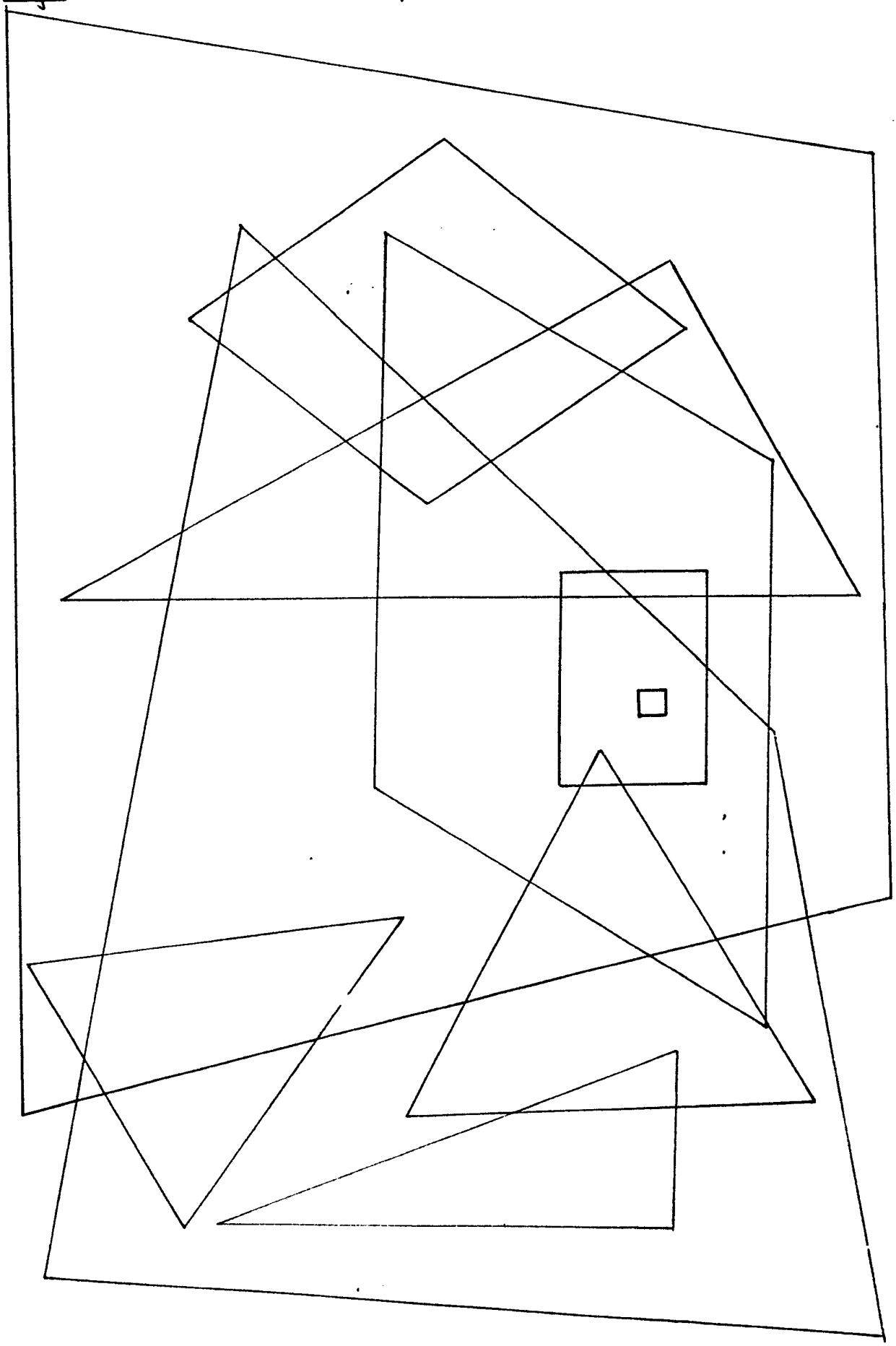

PANTOGRAM

A MULTI-PURPOSE DRAWING INSTRUMENT OF TWO BASIC TYPES, INCLUDING ATTACHMENTS TO EXTEND THE RANGE OF SHAPES DRAWN.

This invention, termed "PANTOGRAM" henceforth, relates to a multi-purpose drawing instrument described herein. PANTOGRAM is coined from the Greek words "pan" meaning "all" and "gram" meaning "written".

Numerous types of drawing instruments exist, most of which are single purpose. For example a compass is used to only draw circles. There is also a device known as a pantograph which consists of intersecting members in the shape of parallelograms used for copying or enlarging or reducing existing drawings. Hence a pantograph as such, is not an instrument used in the creation of original drawings. The PANTOGRAM on the other hand is a drawing, not a copying, instrument. It is, moreover, multi-functional and can draw a wide range of different shapes from small to large sizes, even in its basic form. With extra attachments the range of shapes can be further extended. Additionally some of the attachments may be employed in drawing more than one type of shape. That is, be able to be used across the various attachment sets.

According to the present invention two types of PANTOGRAM are provided. One type is adjustable in fixed increments by means of fixed locating holes along the sections of the instrument. The other type is continuously adjustable by means of slots along the instrument sections or by an "adherence technique". Two "base-sections" and two detachable arms comprise the basic instrument. One or more of the base-sections optionally include a built-in protractor to assist in setting of the instrument and also for measuring angles.

The basic PANTOGRAM is used for drawing squares; triangles (all types); parallelograms; trapezoids; oblongs; rectangles as well as measuring angles when the optional protractor is included. Conic sections can also can be plotted. The instrument also operates as a template and ruler.

Additionally, extra arm section attachments extend the range of drawn shapes to include polygons. One additional arm section enables pentagons to be drawn, whilst two enables the drawing of hexagons. Extra internal angle pieces are used to assist the drawing of these.

Additionally, with a point and holder attachment, an arm may be used as a compass. This with an additional winder attachment may be employed to draw spirals as well.

Additionally, with a string and pulley attachment regular and concentric ellipses can be drawn. With another attachment, pivoted ellipses can be drawn, as well as providing dividers.

A specific embodiment of the invention will now be described by way of example, with reference to the accompanying drawing in which:

Figure 1	This shows as a plan view the basic instrument with the two base-sections and two demountable arms. A protractor section is shown with one of the base units. It is set up to draw an oblong.
Figure 2.1	This shows in greater detail the incremental type as a plan view. It is set up to draw a parallelogram.
Figure 2.2-2.3	This shows the hole/peg arrangements of the incremental type.
Figure 3.1-3.2	This shows in greater detail the continuously adjustable type, again as a plan view. It is set up to draw a triangle, by two techniques.
Figure 3.3	This shows the sliding pivot arrangement of the continuously adjustable type.
Figure 4.1-4.2	This shows the instrument in use against a drawing board traverse as a drawing head. It is set up to draw an irregular pentagon and a regular hexagon. Internal angle pieces are illustrated and angled arm sections.
Figure 5.1	This shows the instrument being used to plot a parabola. An internal angle piece is illustrated.
Figure 5.2	This shows a "T" shape attachment.
Figure 6.1-6.3	This shows the point and holder attachments for drawing circles.
Figure 7.1-7.8	This shows the winder and rack-gear attachments used with the attachments of figure 6 for drawing spirals.
Figure 8.1-8.5	This shows the pulley string assembly for drawing regular ellipses.
Figure 9	This illustrates the range and size of figures drawn with an actual PANTOGRAM (basic type), excluding templates.

Note: Figures illustrate the continuously adjustable type. The alternative fixed incremental type PANTOGRAM may also be used for all modes except those shown in figures (7), where sliding action is required.

Referring to the drawing, the PANTOGRAM consists of two thin near equi-length base-sections (1) and (2) with an optional protractor (3) on one of the base-sections. The other base-section may incorporate 'angle marks' (3) or another protractor. Attached to these base-sections at pivot points (4) and (5) are thin detachable arm-sections (6) and (7). In the continuously adjustable variant, pivot points (4) and (5) are at a fixed location on the base-section, which need not be the case on the incremental variant. The base-sections may be the same width or wider than the arm sections to allow for more complex fixing arrangements and template areas. Both may include rulers along the edges. The base-sections may include pressed out shapes for templating of useful figures, letters and numbers. The arm sections may be designed to be identical to reduce the number of different members in the unit. Slot-end-holes with diameters greater than the pivot points may be provided at one or both ends of the slider slots to enable quick detachment of the instrument arms, (shown dotted in the diagram). The protractor arm option, however, has to include a hole position (4) to create a cursor operation.The cursor may include a vernier scale for accurate angle measurement. An additional hole may be provided at the opposite end of the slider to this cursor hole to enable the arm to be pivoted from the other base-section slider. This construction enables butting of the PANTOGRAM to a drawing board slider, with a relatively rigid operation being possible. The arm sections are attached to the base-sections at relocatable pivot points (8) and (9). This completes the shape and rigidises the instrument. By tracing around the inside edge of the PANTOGRAM, the shape may be drawn (shown dotted). When not in use the PANTOGRAM folds down into a convenient small size (10). Various sizes of the PANTOGRAM may be employed depending on the size range of figures required.

The incremental PANTOGRAM employs pre-fixed holes (11) in the base and arm sections into which pivot pegs or screw retaining pieces (12) may be inserted. The holes may be in staggered formation. A variant in this construction uses pre-fixed studs (13) which are conveniently positioned on the base-sections. This arrangement requires no peg or screw retainers, the two members being secured, but still rotatable, by a "pressing-together" action. Detachment occurs by a "pulling-apart action". The construction of both these variants leads to a lower cost instrument, albeit less adjustable than the continuously adjustable type described next. The variant using pre-fixed studs also has a more limited angular range than the peg/screw variant and is unable to be clamped, other than by manual pressure. Both variants optionally may employ a mutually adhering technique as described in the next paragraph herein. Alternatively, non-slip surfaces may be attached or incorporated into contact sections of the base-sections and arms, particularly in the case of the variant employing pre-fixed studs. This prevents rotational movement of the arms, when manual pressure is being applied.

The first variant of the continuously variable PANTOGRAM uses base-sections and arms with or without slots and holes. The

members are either made of magnetic material so that they mutually attract each other, so effectively ending up clamped together. Or they employ re-usable adhesive materials on their surfaces (eg "Velcro"). Or both techniques are used together in combination.

The second variant of the continuously adjustable PANTOGRAM employs long narrow slots in each of the base-sections and arms (14). The slots in each of the base-sections widen underneath to slots (16) into which a screw-peg and shoe arrangements fit (17). A knob (15), screws onto each screw-peg to complete the pivot with a clamping action. The underside of the knob has a friction pad attached (18) to assist clamping without damaging the surface underneath it. An alternative shoe peg with a push-twist-clamping arrangement may be provided. The push-twist clamp knob may also be permanently attached to prevent loss. In this instance demounting of arms is achieved by usage of slot-end-holes, earlier described. The purpose of the slot and shoe of either design is to provide a sound clamping action whilst minimising base-section thickness. The employment of thin base-sections and arms facilitates easy drawing. The pivot points in the base-section (4 and 5) may employ fixed studs or detachable mountings similar to the screw-peg and shoe arrangement.

When used flush against a drawing board's traverse arm (19), the continuously adjustable arm of the upper base unit is relocated off its normal pivot hole. (This would be an adjacent hole in the case of the incremental type unit). An internal angle (108 degrees for pentagon) is shown being used (20). One additional arm member is shown in usage. This may be of a different design without a pivot end hole, or may follow a common design similar to the other arms. Pre-angled arm units may be employed to draw regular polygons. Here the arms are built with elbows of either 108 degrees or 120 degrees for regular pentagons and hexagons respectively. The bent arms replace the conventional straight arms and may be of various lengths. Back facing 'wings' may be incorporated (shown dotted) on shorter length angled arms to ease the drawing of small regular polygons. The illustration shows twin protractor systems in use. The second variant of which utilises a detachable section-piece to achieve flush usage against the traverse arm.

The base-section without the included protractor, used in conjunction with its arm section and two other arm sections may be used to plot parabolas, hyperbolas or ellipses. The PANTOGRAM is illustrated butted to drawing board transverse arm (19). Arm (21) is the directrix for the construction. Pivot (22) is the focus. Points are plotted at the intersection (23) of the arm perpendicular to the directrix and the arm to the focus. Internal angle (90 degrees) is shown being used to maintain the perpendicular (24). An alternative T shaped attachment may be employed to maintain the arm perpendicular. This is designed to be a sliding fit over the directrix arm (21) and a tight fit over the perpendicular arm. Cut-outs are provided for the knob (15)

and to allow the focus arm maximum movement. The detail is shown in the isometric view (25).

A single arm section (6) or a base section (1), a knob attachment with a point (26), together with another attachment (27) which is able to be tightened to the arm section and takes pencil leads or pencils, is used for drawing circles. Pads (18) are employed to assist in the smooth rotational movement for the centre attachment (26) relative to the arm and to assist clamping for the pencil lead attachment. A feeder device (28) is used to feed pencil leads through the central hole of a stud and shoe unit (29) which comprises the lower section of the pencil lead attachment. The shoe fits into the slot recess (16) of the base-section, to provide a flush surface to the paper. In the case of a base-section of the corresponding incremental type PANTOGRAM the shoe is proud of the surface but does not detract from the function. Ordinary leaded pencils are accommodated by a further "L"shaped extension arm (30) which clamps to the pencil lead attachment (29). On this is mounted a normal compass bush and clamp assembly (31). The mating of the extension arm to the pencil lead attachment is shown in exploded format. In the case of the incremental type PANTOGRAM, a continuous adjustment effect comparable to the slider type is achieved by slanting the clamp attachment from the set hole positions (32). The length of the L shaped arm is long enough to enable this adjusting action to occur. A second hole is provided for close clamping for the continuous variant. It should be noted that the stud and shoe unit (29) is a variant of that shown in (17). Hence part of the compass attachments may be provided in the base instrument configuration by supply of one or more of the variant forms (29) of the standard stud and shoe unit (17).
Smaller length sections (6) may be provided for easier usage of the compass when smaller circles are being drawn.

An arm section set up as described earlier herein, as a compass, has a platten attachment (36) which screws into the compass point/knob (26). The platten is covered with a matrix of either holes or dimples or ridges, the purpose of which is to mate with the opposite counterpart in the next part to be attached. This is one of a series of concentric shapes which nest together. Cylindrical shallow anuluses (37) are illustrated, although other shapes such as squares, triangles, polygons, ellipses, oblongs may be provided. With one of the anuluses centrally mounted on the platten a restraining bar (35), string (34) and tab (33) are installed on the device. When the arm is now rotated the anulus and platten assembly act as a winder and draws the plotting assembly towards the centre, so producing a regular spiral. Notches are provided on the anulus to allow fixing of the string when the restraining bar is centrally inserted into the platten.

A further clamping bar and screw assembly(38) is provided so that the anuluses may be eccentrically mounted. When locating spigots are provided in the anulus it may be inverted if required, notches for string retaining being provided on the new topside surface. With shapes other than a circle in cross section or when the shapes are eccentrically mounted, the spiral plotted is

deformed in a cyclical pattern, resulting in a complex plot. The tab (33) includes a clip arrangement so that the length of string may be adjusted.

An alternative to the angular winding arrangement is the usage of an epicyclic (sun and planet) gear train. Here a detachable inner gear (39) is held stationery whilst a detachable planet gear (40), which is attached to the slide-arm (6), rotates around the inner gear, as the arm is turned. This planet gear drives a further outer gear(41) in the same direction of rotation as the arm. The nett effect is that the winding rate on the string is reduced. The inner gear wheel and planet gear may be exchanged for different sized gears to effect different winding rates. Additional supporting planet gears may be provided, but these need not be driven or detachable. This system will only draw regular spirals. Closer ratios and hence finer spirals may be drawn if a stepped outer gear (41A) is employed.

A second alternative to the string platten system may be provided in the form of a sliding-rack-gear (42) which attaches at one end to the pencil lead attachment (27). At the other end, the rack-gear engages with a demountable pinion gear (43). this provides a positive winding action, but cannot provide other than regular spirals. To overcome this the pinion-gear may be constructed with eccentric keyed hole positions. It may also be non-circular in the shape of ellipses, triangles, squares and polygons. The rack-gear is held in position against the non-circular pinions by a spring loaded shoe arrangement (44). This also enables quick dismounting of the pinion and positioning of the rack-gear. As with the earlier described compass. Different length rack gears and arms may be used.

Finally the sun and planet gear arrangement earlier described may be used in place of the pinion gear. The outer gear (41 or 41A) in this instance will have an outer periphery of teeth, in addition to its inner set of teeth. The effect of using this arrangement is that fine spirals may be drawn, with the additional benefit of a positive winding action resulting from using a rack and pinion gear train. Regular spirals only may be drawn, in the case of the non-stepped version (41).

A string (46) with two tabs (33) is attached to two pivot points in turn, mounted on an arm. The pivot points are at the foci of the regular ellipse which may be drawn. A selection of arm lengths is provided, the lengths of which cover a range of sizes of ellipses. The plotting point is made up from the earlier described attachments (28), (29). However, a small pulley (45) replaces knob (15), over which the string passes.

An alternative "scissored" construction of arms is illustrated as well. The single base line construction may produce a series of either concentric ellipses if string length is altered. If foci separation is adjusted together a "precession" effect is produced. Complex sets of ellipses may be produced by both the single base line and scissored arrangements.

A further variant has two arms erect and foci points at the ends of the arms (47). In the exploded view detail of (47) a special lug with a screw attached (48), is secured to the arm end by knob (15). To it is attached a screw-in point (49). The tab (33) attaches between the lug and the point. A plain shank section is provided on the screw point and enables the tab to rotate freely. A bracing bar may be used across the two arms. Ellipses may be drawn in a similar manner as described earlier herein.

With this erect assembly, if one of the focus points is kept fixed and the other focus rotated relatively to it, a series of ellipses pivoted on the fixed focus, is produced.

Without the tabs string and plotting assemblies the arrangement can be used as a normal pair of dividers.

CLAIMS

1 A multi-purpose drawing instrument of two types termed 'continuous' and 'incremental', both capable of drawing a wide range of different shapes in basic form and being extended with either additional attachments or replacement attachments for drawing additional shapes not possible with the original basic instrument. Attachments are not necessarily limited to drawing one additional shape but may be employed in drawing several, as is the basic instrument.

2 A multi-purpose drawing instrument as claimed in Claim 1, in its incremental form comprising two base-sections with ruler markings which may or may not include an in-built protractor or protractors or 'angle marks' and templating facilities, such as further set figures and alpha-numerics, has two detachable arm sections with ruler markings. The arm sections may attach by a variety of techniques including: pre-fixed holes with pivot pegs, or holes with screw retaining pieces or adherence methods, either magnetic or adhesive material (Velcro), or any combination of the above described techniques.

3 A multi-purpose drawing instrument as claimed in Claim 1 or Claim 2, in its continuous form comprising of two base-sections with ruler markings which may or may not include an in-built protractor or protractors or 'angle marks' and templating facilities, such as further set figures and alpha-numerics, has two detachable arm sections also with ruler markings. The arm sections may attach by a variety of techniques including: long narrow slots in base sections and arms into which 'T' shaped screw pegs and shoe arrangements fit and into which screwed clamping knobs are applied, or by push-twist clamp knobs which may be attached or detachable, and if attached need additional 'slot-end holes'; or by adherence methods, either magnetic or adhesive material (Velcro), or any combination of the above described techniques.

4 A multi-purpose drawing instrument as claimed in Claim 1 or Claim 2, in its continuous form comprising two base-sections with ruler markings which may or may not include an in-built protractor or protractors or 'angle-marks' and templating facilities, such as further set figures and alpha-numerics, has two detachable arm sections also with ruler markings. The arm sections may attach by a variety of techniques including: long narrow slots in base sections and arms into which 'T' shaped screw pegs and shoe arrangements fit and into which screwed clamping knobs are applied, or by push-twist clamp knobs which may be attached or detachable, and if attached need additional 'slot-end holes'.

5 A multi-purpose drawing instrument as claimed in any preceding claim wherein additional marks are provided at the end of one or more of the detachable arms when used with similar additional marks on one or more protractors in the base-sections, produces a vernier or verniers which enables angles from 1 to 0.1 degree accuracy to be drawn, or measured.

6 A multi-purpose drawing instrument as claimed in either Claim 1, Claim 3, Claim 4 or Claim 5, wherein additional hole(s) at the protractor(s) arm end(s) are provided to enable the protractor(s) arm(s) to be pivoted from the other base-section(s) so enabling the instrument to be used flush against a drawing board's traverse arm. Arm, arms, protractor, protractors means singular protractor and arm, or two protractors and associated arms, accordingly.

7 A multi-purpose drawing instrument as claimed in any preceding claim wherein 'angle-marks' on the base section or base sections may be employed and installed instead of or as well as an included protractor or protractors.

8 A multi-purpose drawing instrument as claimed in any preceding claim except Claim 2, wherein a base section, toppermost, includes a protractor of diameter greater than the associated rule section, having attached a demountable arm section with an end vernier for 0.1 degrees accuracy. Another base section, bottommost, with another protractor of diameter within the rule section and having a demountable arm section, with an end vernier for 1 degree accuracy. Also, having slots 'T' pieces and screw clamping knobs to form the continuous adjustable variant, and extra hole position at the end of the arm section attached to the uppermost larger diameter protractor, for arm offsetting and butting to drawing board traverse arms. Also, including pre-fixed templates of ellipses in the toppermost base section and circles in the bottommost base-section.

9 A multi-purpose drawing instrument as claimed in any preceding claim, wherein small 'angle-pieces' are used as setting up aids as attachments to the basic instrument and have pre-fixed angles and sizes and are used by fitting flush into the required shape prior to drawing, then removed on drawing the shape.

10 A multi-purpose drawing instrument as claimed in any preceding claim, wherein the bottommost base-section has a protractor greater in diameter than the associated rule section and uses as an attachment piece a template 'section-piece' for butting to drawing board traverse arms.

11 A multi-purpose drawing instrument as claimed in any preceding claim, wherein additional straight arm sections of corresponding version type (continuous slots, or incremental holes), may be added as attachment pieces to draw triangles and polygons. Straight arm sections may be of different lengths and may include end holes if the 'push-twist' clamp knobs of Claim 4 are employed, or end holes for drawing board traverse arm butting.

12 A multi-purpose drawing instrument as claimed in any preceding claim, wherein bent additional arm sections of corresponding version type (continuous slots, or incremental holes), may be added as attachment pieces to draw polygons, normally of regular type. Bent arm sections may be of different lengths and have prefixed angles according to internal angle calculation, (120 degrees for hexagon, 108 degrees for pentagon); one arm section being needed for pentagons, two arm sections for hexagons. Higher order polygons than hexagon require at least one bent arm with more than one bend.

13 A multi-purpose drawing instrument as claimed in Claim 12, wherein the bent additional arm sections include wings in the backward direction relative to the bend direction to enable small size polygons to be drawn.

14 A multi-purpose drawing instrument as claimed in any preceding claim, wherein a 'T' shaped attachment is clipped over two arms or a base-section and arm to cause the two components to be rigidly set to a right-angle, but enabling the arm, or base-section, so fixed, to move up and down the other arm for plotting of conic sections.

15 A multi-purpose drawing instrument as claimed in any preceding claim, except Claim 2, wherein a hole is provided in the slider 'T' piece to take pencil leads or similar markers and a securing knob arrangement is provided to adjust same leads or markers. This modified 'T' piece either being used as an attachment to the basic unit or included with it.

16 A multi-purpose drawing instrument as claimed in any preceding claim, wherein an angled 'L' shaped attachment bracket mounting a screw boss arrangement is provided to take ordinary pencils and pens and clamp them to the 'L' shaped bracket for drawing purposes. The aforementioned being clamped to one of the 'T' pieces in either incremental or continuous versions of the instrument and used to draw circles.

17 A multi-purpose drawing instrument as claimed in any preceding claim, except Claim 2, wherein an attachment plattern is provided. Anuluses of nested shapes may be clamped individually to the plattern and the aforementioned plattern in turn screwed into a pointed screwed boss. The so formed arrangement when added to a slotted arm, or base-section together with the 'T' section claimed in Claim 15 and a string tabs clips arrangement, is used to provide a means of drawing spirals, 'distorted' spirals and kindred shapes.

18 A multi-purpose drawing instrument as claimed in any preceding claim, except Claim 2, wherein the attachment plattern anulii clamps and boss of Claim 17 are replaced by a sun and planet gear arrangement in which the inner gear and planet gear(s) may be changed to affect a rotation rate change. Gear or gears are stated herein, since one or more planet gears may be employed subject to detail design.

19 A multi-purpose drawing instrument attachment as claimed in Claim 18, wherein the outer planet gear has a toothed outer rim and may be employed with a toothed rigid arm instead of the clip string arrangement of Claim 17, thereby providing a means of drawing regular spirals without holding tension on a linking string.

20 A multi-purpose drawing instrument attachment as claimed in Claim 19, wherein the planet gear assembly is replaced by a simple range of selectable cogs to which a spring loaded shoe holding arrangement is attached but rotatable. Thereby, this arrangement with the toothed arm, provides a rack and pinion assembly similar to Claim 19, but simpler in concept and capable of 'distorted' spirals if non-central holes are provided in the pinion cog.

21 A multi-purpose drawing instrument as claimed in any previous claim, wherein the modified 'T' piece of Claim 15 additionally mounts a pulley. This in turn is used in conjunction with the string and tab arrangement of Claim 17 and an arm, or base-section, of either version (continuous-slides or incremented-holes) to draw ellipses of varying sizes.

22 A multi-purpose drawing instrument as claimed in any previous claim, wherein the modified 'T' piece and string-tab arrangement of Claim 21 are used with a triangular set of arms to draw a dynamical range of ellipses.

23 A multi-purpose drawing instrument as claimed in any previous claim, wherein two right angle lugs and screw-in point assemblies are used with, or without the modified 'T' piece and string-tab arrangement of Claim 21. When used without and attached to two arms with a smaller bracing arm a set of dividers is provided. When used with, the dividers adapt to provide a means of drawing ellipses in a 'petal-like' formation, pivoting on a fixed focus.

24 A multi-purpose drawing instrument wherein a base section with ruler markings includes a protractor at one end, either left end or right end, for drawing and measuring angles.

25 A multi-purpose drawing instrument substantially as described herein with reference to Figures 1, 2.1, 2.2, 2.3, 3.1, 3.2, 3.3, 4.1, 4.2, 5.1, 5.2, 6.1, 6.2, 6.3, 7.1, 7.2, 7.3, 7.4, 7.5, 7.6, 7.7, and 7.8 of the accompanying drawings.

Published 1991 at The Patent Office, State House, 66/71 High Holborn, London WC1R 4TP. Further copies may be obtained from Sales Branch, Unit 6, Nine Mile Point, Cwmfelinfach, Cross Keys, Newport, NP1 7HZ. Printed by Multiplex techniques ltd, St Mary Cray, Kent