PATENT SPECIFICATION (11) 1595876

1595876

(21) Application No. 7480/78 (22) Filed 24 Feb. 1978 (19)
(31) Convention Application No. 772 145 (32) Filed 25 Feb. 1977 in
(33) United States of America (US)
(44) Complete Specification published 19 Aug. 1981
(51) INT. CL.[3] G01N 31/08 B01D 15/04
(52) Index at acceptance
B1H 260 280 490 492 494
G1B CM

(72) Inventor DAVID R. FRISWELL

(54) SAMPLE INJECTION WITH AUTOMATIC CLEANING OF SAMPLING CONDUIT

(71) We, WATERS ASSOCIATES INC., a corporation duly organised under the laws of the state of Delaware, U.S.A., of Maple Street, Milford, Massachusetts, United States of America, do hereby declare the invention, for which we pray that a patent may be granted to us, and the method by which it is to be performed, to be particularly described in and by the following statement:—

The present invention relates to apparatus for washing a sampling conduit, a liquid sample injection apparatus including the same, and a process for washing a liquid sampling conduit.

In liquid chromatography it has been a problem to provide means to inject discrete liquid samples into a liquid chromatograph column with a minimum of dilution or "peak-spreading" as it is called in the chromatographic art. We have set out to provide an apparatus useful in the injection to an l.c. column sequence of a large number of liquid samples. Such sequential testing apparatus is known to be useful in such testing procedures as quality control testing in the pharmaceutical industry and the like.

In general, the schematic injection scheme selected by us is that disclosed in U.S. Patent No. 3,916,692.

In adapting that scheme to a reciprocating sampling conduit adapted to enter a series of sample containers we encountered a number of design problems, the most critical of which was the sealing of the outlet of the reciprocating sample conduit into the liquid chromatographic flow circuit. It is to be understood that in the chromatographic processes being discussed, fluids are handled at pressures of 5000 psig and even higher.

As will be described below, in connection with the apparatus shown in the accompanying drawings, the particular apparatus constructed to meet the various problems meets, and even surpasses, the prior standard of performance established by the apparatus described in U.S. Patent No. 3,916,692.

The apparatus described below includes features of the apparatus of co-pending Applications Nos. 7479/78 (1595875) and 8000980 (1595877) which respectively describe and claim:

a liquid sample injection apparatus comprising a sample loop, means to supply discrete samples to said loop from a first end thereof, means to supply solvent from a second end thereof to push a sample in the sample loop out of said injection apparatus by discharging it from the sample loop and through an injector outlet port, and means to supply solvent through a conduit by-passing said sample loop and thence to said injector outlet port at the same site at which said sample loop is discharged into said outlet port, the means to supply discrete samples to said loop comprising a sampling conduit that forms part of said sample loop and is movable in a vertical channel between a sample-intake position and a sample-discharge position, the sampling conduit including a discharge orifice on one side thereof which, in the sample-discharge position, can be aligned with the injector outlet port whereby a liquid sample in the sampling conduit can be discharged into the outlet port and a plug member to seal the vertical channel below the discharge orifice when said sample conduit is in the sample discharge position, and the means to supply solvent through a conduit by-passing said sample loop including an annular passage around said sampling loop proximate said orifice when said orifice is in its sample-discharge position, and fluid seal means to maintain a fluid seal between said sampling conduit and the walls of said vertical channel at a position above and at a position below said outlet port, each said fluid seal means comprising a sleeve of compressible resin forming part of the wall of said channel and stress means mounted above and below said

sleeve, each stress means having a protruding portion facing the adjacent sleeve to indent the axial upper and lower extremities of said sleeve inwardly towards each other when the sleeve is compressed between the stress means to form a sealing contact between said sample-intake conduit and said walls, and means to compress each sleeve between a pair of said stress means; as well as said fluid seal means, and a needle valving block including the same.

— and —

A liquid sample injection apparatus comprising a sample loop, means to supply discrete samples to said loop at a first end thereof, means to supply solvent from a second end thereof to push a sample in the sample loop out of said injection apparatus by discharging it from the sample loop and through an injector outlet port, and means to supply solvent through a conduit by-passing said sample loop and thence to said injector outlet port at the same site at which said sample loop is discharged into said outlet port, the means to supply discrete samples to said loop comprising a sampling conduit that forms part of said sample loop and is moveable in a vertical channel between a sample-intake position and a sample-discharge position, the sampling conduit including a discharge orifice on one side thereof, which, in the sample-discharge position, can be aligned with the injector outlet port whereby a liquid sample in the sampling conduit can be discharged into the outlet port, and a plug member to seal the vertical channel below the discharge orifice when the sampling conduit is in the sample discharge position.

In liquid chromatography and numerous other analytical procedures in the chemical and medical arts, it is desirable to have a large number of samples handled sequentially on the same apparatus. In such cases, a conduit, often a hypodermic needle or the like, is dipped into a series of different samples. In such situations, there is an increased danger of cross-sample contamination because of sample from an earlier operation being dipped into a second operation.

It has been a problem in the art to provide a drip-proof, conduit-cleaning procedure which can be rapidly used without slowing the sample feeding procedure. As will be described below, we have, for the first time, achieved such a drip proof, contamination avoiding, conduit cleaning means. This apparatus is particularly valuable in conjunction with automatic liquid sampling apparatus in liquid chromatography.

Accordingly, the present invention provides apparatus for washing a sampling conduit comprising (a) a housing through which said sampling conduit can move in up and down movement, said housing comprising porous wiping means which can make snug contact with said conduit when the conduit is in position in the housing; (b) means to distribute a supply of wash liquid to said conduit through said porous wiping means; and (c) means to move air through said porous wiping means and to remove air therefrom at a position below said wash-liquid supply means.

The invention also provides a liquid sample injection apparatus comprising a sample loop, means to supply discrete samples to said loop at a first end thereof, means to supply solvent from a second end thereof to push a sample in the sample loop out of said injection apparatus by discharging it from the sample loop and through an injector outlet port, and means to supply solvent through a conduit by-passing said sample loop and thence to said injector outlet port at the same site at which said sample loop is discharged into said outlet port, the means to supply discrete samples to said loop comprising a sampling conduit that forms part of said sample loop and is moveable in a vertical channel between a sample-intake position and a sample-discharge position, and washing apparatus according to any one of claims 1 to 5 positioned so that the sampling conduit between the sample-intake position and the sample-discharge position moves through said housing in snug contact with said wiping means.

The invention further provides a process for washing a liquid sampling conduit comprising the steps of (a) maintaining the liquid-wetted exterior surface of said conduit in snug contact with a relatively soft porous mass; (b) reciprocating said conduit in relation to said mass; (c) supplying a cleaning liquid to said exterior surface through one portion of said mass; and (d) removing air through a second and lower portion of said mass to prevent leakage of any solvent from said porous mass.

Thus, the invention provides an injector valve mechanism for use in feeding of discrete samples of liquid to analytical apparatus, especially to liquid chromatographic apparatus, particularly such apparatus adapted for automatic operation, which is provided with a self-cleaning sample conduit. In this way, when there is preferably also included the fluid seal means of Application No. 7479/78 (1595875) there can be provided liquid sampling apparatus which comprises an automatically cleaned, non-drip reciprocating sample needle and means to discharge the needle directly into a sample loop without any substantial leakage of the sample around the conduit even at pressures of the order of 5000 psig.

In accordance with the aforesaid and as described below, an injector was constructed with actually out-performs the best previous

injectors in terms of the precision with which samples are discharged from the injector into a liquid chromatograph or other analytical devices. In chromatography, this precision results in sharper resolution of peaks representing various chemical compounds.

Illustrative Embodiments of the Invention:

In this application and accompanying drawings there is shown and described a preferred embodiment of the invention and suggested various alternatives and modifications thereof, but it is to be understood that these are not intended to be exhaustive and that others changes and modifications can be made within the scope of the invention. These suggestions herein are selected and included for purposes of illustration in order that other skilled in the art will more fully understand the invention and the principles thereof and will be able to modify it and embody it in a variety of forms, each as may be best suited in the condition of a particular case.

In the Drawings:

Figure 1 is an injector valve assembly constructed to facilitate automatic sample injection,

Figure 2 is a detailed elevation, partly in section, of that portion of the injector valve at which (a) the sampling conduit is jointed to the fluid flow pattern of the rest of the injector and (b) the sampling conduit is automatically washed,

Figure 3 is a plan view of the resin part of a wiper seal shown in Figure 2,

Figure 4 is a section of the stressing insert used with, and forming part of the seal shown in Figure 3,

Figure 5 is a schematic explanation of the function of wiper-seals shown in Figure 3, and

Figure 6 illustrates a sampling conduit useful with the present invention.

Referring now to Figure 1, it is seen that injector valve assembly 10 comprises a number of connections to various conduits as is generally known in the liquid chromatographic art. Thus, conduit 12 runs from a pump (not shown) supplying a carrier solvent into the injector valve assembly 10 and, in a first mode of operation, communicates with an outlet conduit 14 and proceeds into a chromatograpic column (not shown). To do this, the liquid must proceed through needle-valving block 20, best seen in Figure 2. Block 20 comprises an inlet port 22 and an outlet port 24 communicating with conduits 12 and 14, respectively. A sampling conduit means, a modified hypodermic needle 26 is adapted for reciprocating vertical movement in block 20. When the needle is in its lowered position, there is an annular space 26*a* about the needle around which fluid can flow from port 22 to 24. When the needle is raised the lower portion thereof, i.e. portion 27, is a plug means which effectively seals the fluid with lower seal 70.

In the first mode of operations, a valve 16 in conduit 18 is closed. When valve 16 is opened to establish the sample injection mode, most liquid from the pump will leave conduit 12 and flow through conduit 18, and conduit 19, into extensible tubing 19(a) and thence to needle 26, to port 24, conduit 14 and to the chromatographic column.

Figure 6 shows needle 26 with its outlet port 28 preferably in register with the port 24. The bottom portion 27 of the needle is solid and forms no part of the needle conduit.

Referring again to Figure 1, it is seen that the connection means 40 of needle 26 to conduit 19(a) is formed within a steel insert block 42 which, in turn, is carried in an aluminium piston 44. Piston 44 is air operated. The piston 44 moves in a cylindrical housing 30 having a top housing plate 32 and lower housing plates 34 and 36, the lower housing plates having a central channel 60 which also continues into block 20 and in which sampling needle 26 reciprocates. Air to raise the piston 44 (and, of course, needle 26 connected thereto) enters conduit 46; air to lower the piston enters conduit 48. These air connections are connected to a pneumatic control system which is not shown because it forms no part of the invention as claimed herein and because those skilled in the art can readily manufacture and adapt such systems to meet their particular requirements. The piston is provided with lip seals at 50 and 52. Travel of the piston can be adjusted by modifying the vertical position of a stop bar 54 with positioning nut 56. As indicated above, the ideal position is such that port 28 from needle 26 is in register with port 24.

Connection 40 comprises ferrules on each of needle 26 and conduit 19(a). These form a butt connection utilizing fittings already well known in the chromatography art.

Figures 2 to 5 all illustrate an important sealing structure, the subject of co-pending Application N°. 7479/78, Serial N°. 1595875, on which the combination of simplicity and high-pressure capability of the illustrated apparatus depends. At positions just above and below that point in needle channel 60 to which port 28 can be raised in order to communicate with port 24 it is necessary to have an efficacious seal means that will be able to handle pressures to 5000—6000 psig, will be able to do so without binding of the needle 26, and will be able to do so for a prolonged period of time without replacement. In this connection, it should be understood that the apparatus of the invention is intended to be utilized in analytical work wherein it handles, routinely, samples as

small as 5 microliters or smaller. Moreover, it must be realized that the chemical sensitivity of the analytical process being used is such that most organic materials of construction cannot be utilized because of chemical contaminants which would be leached therefrom. Thus the problem faced by the Applicants combined a rare combination of hydraulic, chemical and mechanical restraints and as described in Application N°. 7479/78 (1595875) the problem has been successfully solved by utilization of seals 70 comprising a sleeve 72 formed of a fluorocarbon-based material. It is desirable that the fluorocarbon be reinforced; otherwise shredding or peeling of the seal may result. Advantageously, the material will have tensile and compressive strengths exceeding 1600 and 1200 psi respectively.

A suitable material is well known in the art and sold under the trade designation RULON (registered Trade Mark) J by Dixon Corporation. Stress rings 74 may be separate pieces as illustrated for the highest and lowest rings of Figure 2 herein or may be made integral with block 20 as illustrated for the intermediate rings 92 of Figure 2. Indeed, in the case of the rings nearer the ports 22 and 24, it is desirable to fabricate the stressing rings into block 20.

Figure 3 shows the sleeve 72 of seal 70. It has an outside diameter of 0.152 inches and an inside diameter of 0.059 inches (when used with a needle of a 0.057 inch outside diameter). These diameters are concentric within 0.003 inches. It is to be noted that the sleeve does not comprise any indentation as it is fabricated. In the illustrated embodiment of the invention, sleeve 72 is 0.120 inches long and is formed of an organic resin (as opposed to glass or asbestos) reinforced polyfluorocarbon resin. This material has superior functional characteristics when compared to most reinforced halogenated polymer resins. It is also characterized by a minimum tensile strength of 2000 psi and a compressive strength of about 1430 psi.

Figure 4 illustrates the stressing ring. In the illustrated embodiment of the invention, it comprises a sleeve-deforming surface 80 bevelled to a 90° angle, has a bore of 0.0165 inch diameter, and an outside diameter of 0.151 inches. The flat side wall 82 is 0.05 inches long.

Figure 5 is a highly schematic diagram of a portion of sleeve 72 of seal 70 showing how strain applied to sleeve 72 through rings 74 cause the seal to push out at 86 tending to seal against needle 26. As will be seen in Figure 2, this pressure is achieved as the result of compression between washer housing 88 wherein an extension 90 is threaded into block 20 to bear on the bottommost seal ring 74 which, in turn, pushes the lower seal 70 against a portion 92 of block 20. Similarly, the uppermost of seals 70 is compressed downwardly by a positioning sleeve 94 which, like extension 90 is arranged concentrically with needle 26.

It is to be noted that in normal liquid chromatographic procedures, there is usually no problem in cleaning the interior of conduit sampling needle 26. After a sample has been sucked into needle 26 by a suction syringe 100, and the needle has been pneumatically raised to its proper discharge point, i.e. with port 28 facing outlet conduit 24; then valve 102 is closed, valve 16 is opened and most solvent flow goes through conduits 18 and 19, 19(a),. etc. This flow not only sweeps the sample into the chromatographic column but it also continues for a sufficient time thereafter to assure that no substantial sample contamination remains in the needle. Such a delay is normally inherent in the nature of column chromatography.

As illustrated in Figure 2, there is provided according to the present invention a dripless, sample-conduit washing means 110.

Washer 110 comprises a solvent supply reservoir 112 and a vacuum source 114, both shown schematically on Figure 2. Within washer housing 88, is a bore 89 through which needle 26 moves vertically during operation of the sample injector. About bore 89 are mounted two highly porous plugs 116 and 118 of a sintered material, e.g. polypropylene, polytetrafluoroethylene, or the like. The plugs have pores of about 20 to 40 microns in size. These are separated by a spacer member 120. They are snug against the needle, but without constricting its vertical movement. Although the operation of the washer may be timed manually, it is desirable that it be automated to (1) supply solvent to plug 116 when the needle is down and (2) apply a vacuum to plug 118 when the needle is up.

Washer 10, therefore, provides means via plug 116 to wet the needle while it is depressed and wipe the needle with solvent as the needle rises. Any excess solvent flows through annular space 121 between spacer 120 and needle 26 and is distributed within lower plug 118 and carried away in an air stream pulled upwardly through plug 118 and towards vacuum source 114. This procedure avoids any dripping of solvent from the washer. Plug 118 also forms means to wipe the needle as it moves upwardly out of the sample bottle.

It will be apparent to those skilled in the art that the drawings are schematic. For example, the conduits used in liquid chromatography are generally smaller than those shown. Moreover, to simplify the drawings, the fittings have been omitted as at ports 22 and 24. However, such fitting are well known in the art and form no inventive aspect of the present disclosure.

Not as apparent from a consideration of the invention, is the fact that there is substantial advantage in having the orifice 28 of needle 26 directly face port 24. However, such relative placement of orifice and port substantially reduce the risk of a premature loss of meniscus liquid from the face of the orifice before the intentional sample outflow from the sampling conduit.

WHAT WE CLAIM IS:—

1. Apparatus for washing a sampling conduit comprising

(a) a housing through which said sampling conduit can move in up and down movement, said housing comprising porous wiping means which can make snug contact with said conduit when the conduit is in position in the housing;

(b) means to distribute a supply of wash liquid to said conduit through said porous wiping means; and

(c) means to move air through said porous wiping means and to remove air therefrom at a position below said wash-liquid supply means.

2. Apparatus according to claim 1, wherein said porous wiping means is a sintered material having a pore size of from about 20 to 40 microns.

3. Apparatus according to claim 1 or claim 2, wherein the porous wiping means comprises sintered polypropylene or sintered polytetrafluoroethylene.

4. Apparatus according to any one of the preceding claims, wherein said porous wiping means is divided into an upper portion and a lower portion and wherein the is an annular spacing around said sampling conduit when it is in said position and between said upper and lower portions.

5. Apparatus according to any one of the preceding claims, wherein said wash-liquid supply means is adapted to supply wash-liquid when the sampling conduit is in a sample-intake position and wherein said air-moving means is adapted to operate when the sampling conduit is in a sample-discharge position.

6. Apparatus according to claim 1 substantially as hereinbefore described with reference to and as illustrated in Figure 2 of the accompanying drawings.

7. A liquid sample injection apparatus comprising a sample loop, means to supply discrete samples to said loop at a first end thereof, means to supply solvent from a second end thereof to push a sample in the sample loop out of said injection apparatus by discharging it from the sample loop and through an injector outlet port, and means to supply solvent through a conduit by-passing said sample loop and thence to said injector outlet port at the same site at which said sample loop is discharged into said outlet port, the means to supply discrete samples to said loop comprising a sampling conduit that forms part of said sample loop and is moveable in a vertical channel between a sample-intake position and a sample-discharge position, and washing apparatus according to any one of claims 1 to 5 positioned so that the sampling conduit between the sample-intake position and the sample-discharge position moves through said housing in snug contact with said wiping means.

9. A process for washing a liquid sampling conduit comprising the steps of

(a) maintaining the liquid-wetted exterior surface of said conduit in snug contact with a relatively soft porous mass;

(b) reciprocating said conduit in relation to said mass;

(c) supplying a cleaning liquid to said exterior surface through one portion of said mass; and

(d) removing air through a second and lower portion of said mass to prevent leakage of any solvent from said porous mass.

For the Applicants:
CARPMAELS & RANSFORD,
Chartered Patent Agents,
43 Bloomsbury Square,
London WC1A 2RA.

Printed for Her Majesty's Stationery Office by Burgess & Son (Abingdon) Ltd.—1981. Published at The Patent Office, 25 Southampton Buildings, London, WC2A 1AY, from which copies may be obtained.

1595876 COMPLETE SPECIFICATION
2 SHEETS *This drawing is a reproduction of the Original on a reduced scale*
Sheet 1

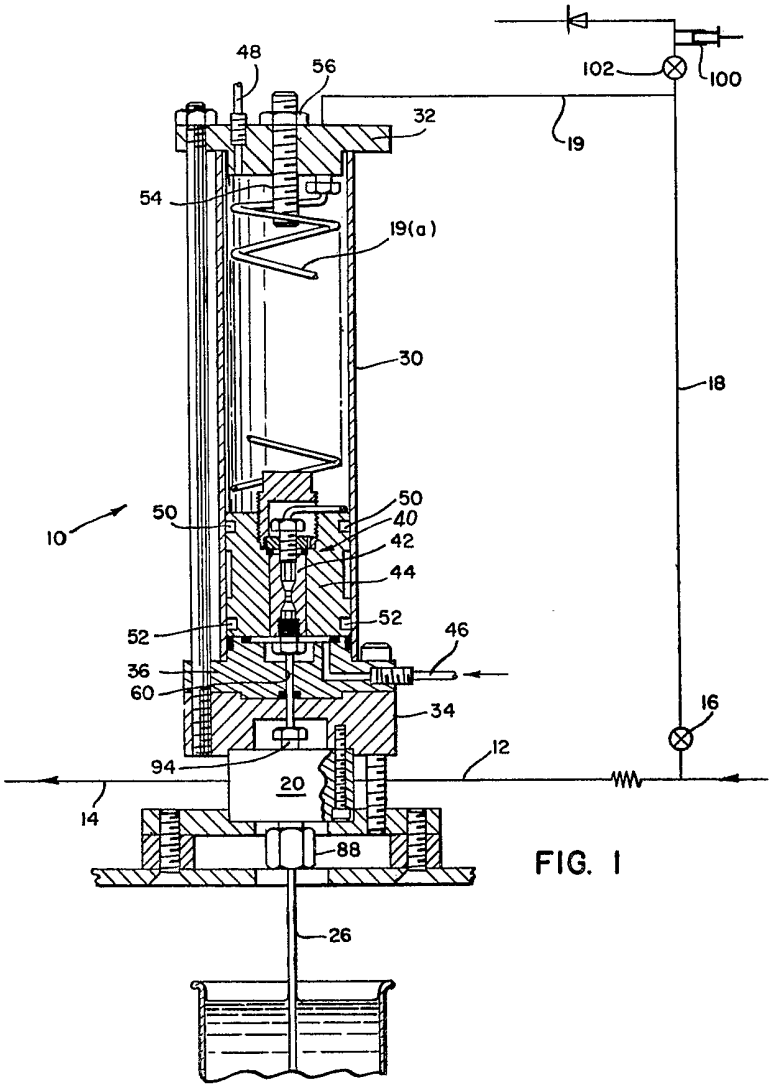

FIG. 1

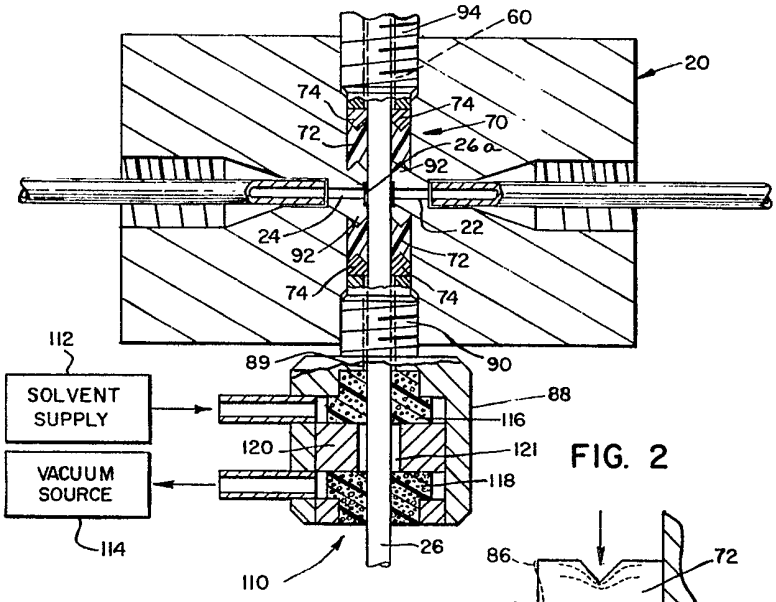

FIG. 2

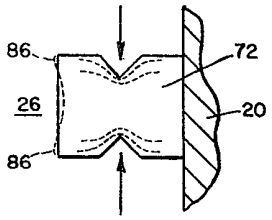

FIG. 5

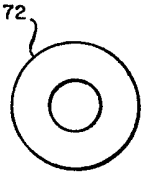

FIG. 3

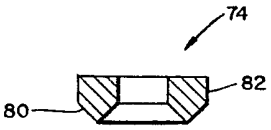

FIG. 4

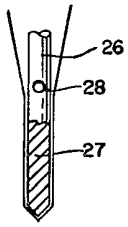

FIG. 6