US 20020145052A1

(19) United States

(12) Patent Application Publication (10) Pub. No.: US 2002/0145052 A1

Cessac (43) Pub. Date: Oct. 10, 2002

(54) TEMPERATURE ACTUATED FLOW RESTRICTOR

(76) Inventor: **Kevin Cessac**, Houston, TX (US)

Correspondence Address:
Loren G. Helmreich
BROWNING BUSHMAN
5718 Westheimer, Ste. 1800
Houston, TX 77057 (US)

(21) Appl. No.: **09/832,421**

(22) Filed: **Apr. 10, 2001**

Publication Classification

(51) **Int. Cl.**[7] **G05D 23/10**; G05D 23/00

(52) **U.S. Cl.** ..... **236/48 R**; 236/81

(57) **ABSTRACT**

A thermostat valve **10** is provided for controlling gas flow to an infrared catalytic heater **26.** The thermostat valve includes a thermally responsive snap member **50, 64** positioned within a housing central flow path and moveable with respect to the housing between open and closed positions. An elastomeric seal **54** supported on the housing surrounds the central flow path and engages the snap member when in the closed position. A restricted flow path **58, 68** is provided in one of the housing and the snap disk for passing gas to the catalytic heater when the snap member is closed. The thermostat valve is relatively simple yet highly reliable.

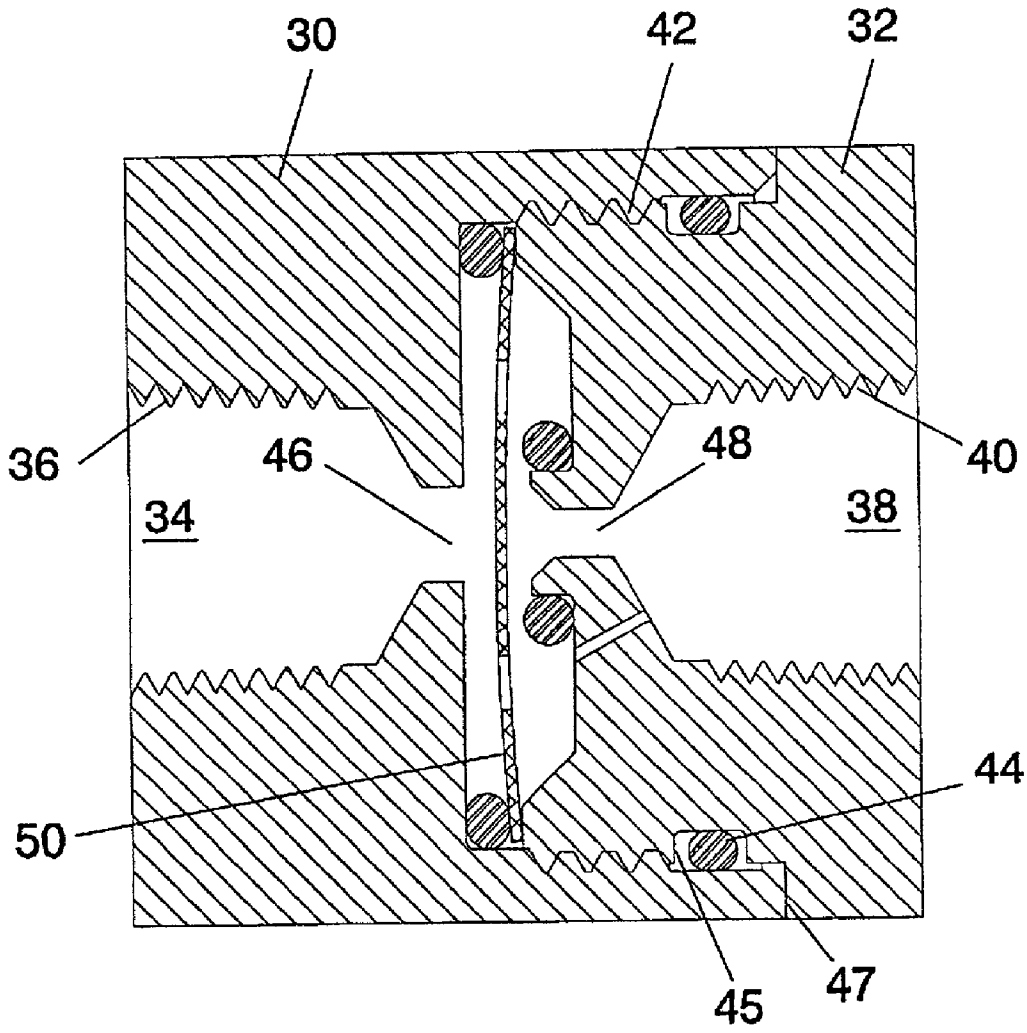

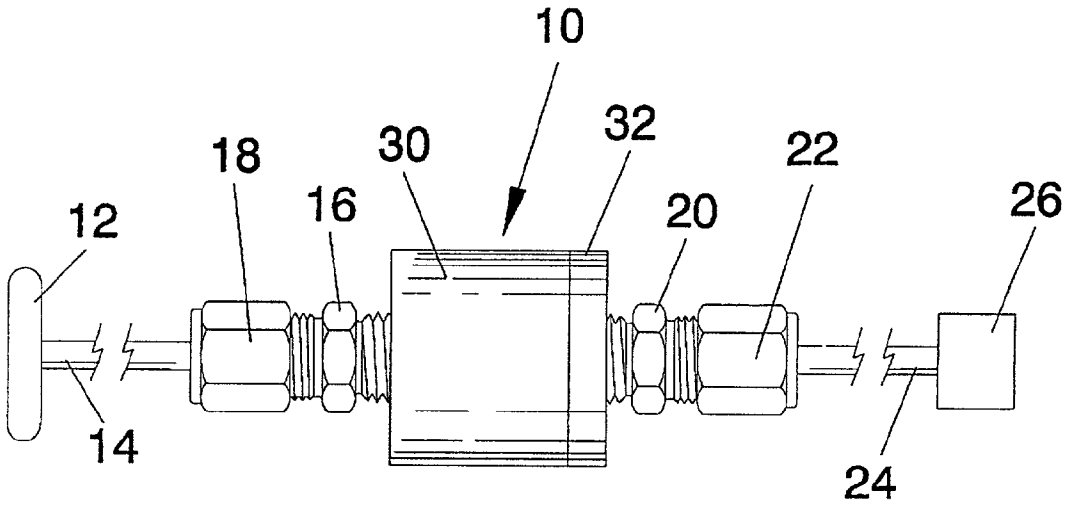

Fig. 1

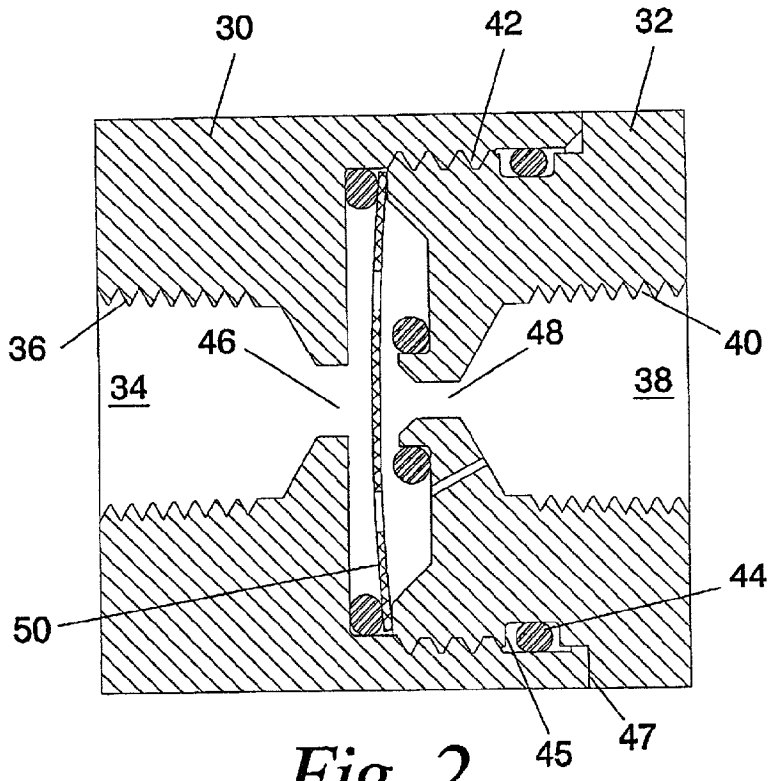

Fig. 2

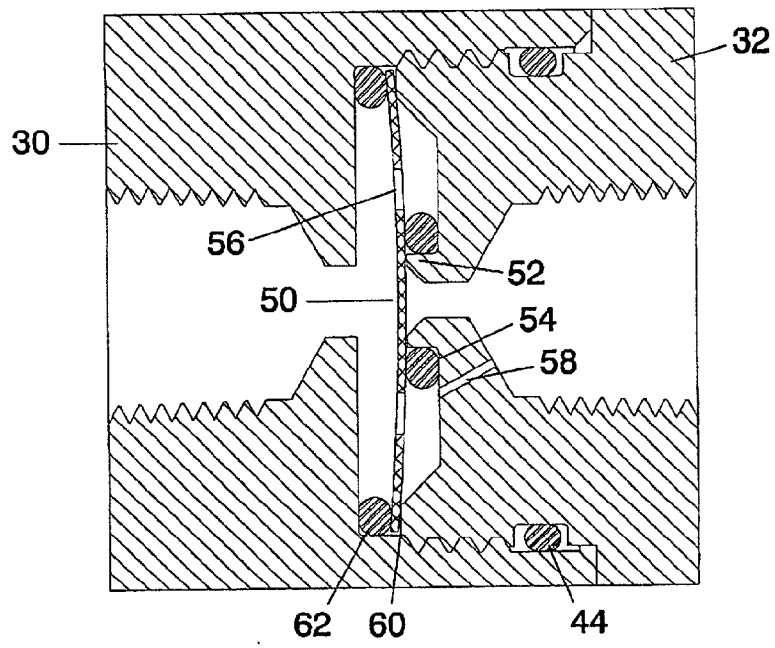

Fig. 3

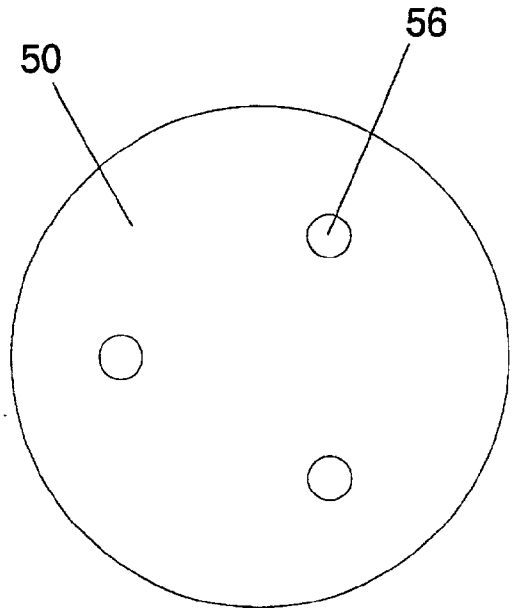

Fig. 4

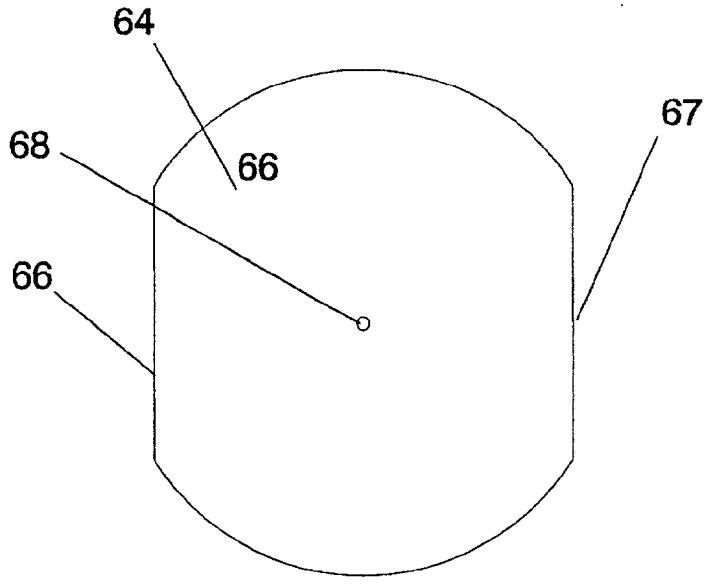

Fig. 5

TEMPERATURE ACTUATED FLOW RESTRICTOR

FIELD OF THE INVENTION

[0001] The present invention relates to a temperature actuated flow restrictor, also called a thermostat valve, for controlling gas flow to a heater. More particularly, this invention relates to an improved thermostat valve for controlling the flow of natural gas or propane for powering an infrared catalytic heater.

BACKGROUND OF THE INVENTION

[0002] Catalytic heaters employ a catalyst bed which results in flameless combustion of the fuel and the creation of infrared energy. Since combustion is flameless, these heaters may operate at a temperature that is lower than the ignition temperature of the natural gas or propane. Catalytic heaters are thus particularly well suited for applications desiring explosion proof operation, such as various applications involving the natural gas industry. In a typical catalytic heater, a catalyst bed is heated to a temperature of about 250° Fahrenheit at which time the thermostat valve is opened so that the supplied fuel and oxygen form the desired reaction with the catalyst bed. When a desired temperature in a room or area about the heater is achieved, the amount of gas supplied to the heater must be reduced. It is important, however, that the supply of gas flow not be completely shut-off since removing the fuel supply would allow the catalyst to cool below the reaction temperature, which would then again require the catalyst bed to be raised to above 250° F. to restart the reaction.

[0003] Conventional thermostat valves for most natural gas or propane consuming devices are designed to close off the fuel supply at a set point temperature. When such valves are used with catalytic heaters, manufacturers have modified the valves to add an orifice through the valve body to allow a reduced gas flow to pass through the thermostat valve when closed, thereby reducing the heater output. Conventional thermostat valves are quite large and thus expensive, since these thermostat valves are generally designed for use with equipment which uses a much higher flow rate of natural gas or propane than do catalytic heaters. Conventional thermostat valves are also complex, and frequently require high maintenance and repair costs.

[0004] Various types of valves have been designed which utilize a thermally responsive disk, which is typically a bi-metal disk having two metallic layers bonded together with one of the layers having a higher thermal coefficient of expansion than the other. U.S. Pat. Nos. 3,856,259, 3,930,613, 4,076,172, and 4,142,676 disclose prior art valves with bi-metal disks. In general, these valves are also complex and utilize various schemes for enabling the snap disk to close off flow through the valve. U.S. Pat. No. **4,133,478** discloses a snap disk with a spider-type spring and an O-ring valve seat. U.S. Pat. No. **4,295,602** discloses a valve intended for use to limit the temperature of hot water in a shower system, and restricts the water flow when the snap disk is in the closed position. Since no elastomeric seal is provided for engagement with the snap disk, the flow rate of the restricted water may vary. U.S. Pat. No. 4,557,019 discloses a flow control device intended for use with a gas analyzer and a heated sampling system to prevent liquid condensation in the system. None of the above prior art patents disclose a valve which is intended to control the flow of natural gas or propane to an infrared catalytic heater.

[0005] The disadvantages of the prior art are overcome by the present invention, and an improved thermostat valve for controlling gas flow to a catalytic heater is hereinafter disclosed.

SUMMARY OF THE INVENTION

[0006] A thermostat valve according to the present invention is particularly designed for controlling the flow of gas, such as natural gas or propane, to fuel an infrared catalytic heater. In one embodiment, the valve includes a housing having a central flow path between the inlet port and the outlet port, and a snap disk movable with respect to the housing between open and closed positions. An elastomeric seal supported on the housing is intended for engagement with the snap disk when in the closed position. A restricted flow path spaced radially outward from the elastomeric seal allows a restricted quantity of gas to pass to the heater when the snap disk is closed. The snap disk may include a plurality of through ports for passing gas through the central flow path when open and through the restricted flow path in the housing when closed. An O-ring may be used as a biasing member for engaging a periphery of the snap disk to bias the snap disk for engagement with the elastomeric seal. When the heater raises the temperature to a desired level, the snap disk will move to the closed position to seal off flow through the central flow path in the valve. A reduced amount of gas continues to flow through the restricted flow path to prevent the heater from cooling below the catalyst reaction temperature. When the temperature drops below a selected value, the snap disk will move to the open position to allow flow through the central flow path in the housing, thereby providing an increased fuel flow rate to the heater to raise the surrounding temperature. In another embodiment, the snap member is provided with the restricted flow path for passing a limited quantity of gas to the heater when the snap member is closed.

[0007] It is an object of the present invention to provide a relatively low cost yet highly reliable thermostat valve for controlling gas flow to an infrared catalytic heater. A related object of the invention is to provide a thermostat valve which is simple and has few, and preferably only one, moving part.

[0008] It is a feature of the invention that the thermostat valve may be manufactured to operate at various temperatures by changing the bi-metal disk.

[0009] It is another feature of the invention that the safety of the thermostat valve is enhanced by providing a valve which does not require any user adjustments.

[0010] It is a significant advantage of the invention that the thermostat valve is simple, highly reliable, and has a relatively low manufacturing and maintenance cost.

[0011] These and other objects, features, and advantages of the present invention will become apparent from the following detailed description, wherein reference is made to the figures in the accompanying drawings.

BRIEF DESCRIPTION OF THE DRAWINGS

[0012] **FIG. 1** is a simplified representation of a thermostat valve according to the present invention positioned along a flow path from a gas storage vessel to a catalytic heater;

[0013] **FIG. 2** is cross-sectional view of the thermostat valve as shown in **FIG. 1** in the open position;

[0014] **FIG. 3** is cross-sectional view of the valve as shown in **FIG. 1** in the closed position; and

[0015] **FIG. 4** is a top view of the bi-metal disk shown in **FIGS. 2 and 3**.

[0016] **FIG. 5** is a top view of an alternative bi-metal member.

BRIEF DESCRIPTION OF PREFERRED EMBODIMENTS

[0017] The temperature actuated flow restrictor or thermostat valve according to the present invention is particularly well suited for controlling the flow of natural gas or propane for powering an infrared catalytic heater. **FIG. 1** simplistically depicts a storage vessel **12** with a flow line **14** in fluid communication with conventional fitting **16** which is threaded to thermostat valve **10**. A conventional tubing connector **18** is provided for forming a fluid-tight seal between tubing line **14** and threaded fitting **16**. A similar fitting **20** is threaded to the outlet port of the thermostat valve **10**, with connector **22** fluidly connecting the outlet flow line **24** to the threaded fitting **20**. An infrared catalytic heater **26** is thus provided with fuel through the line **24**, with the flow of fuel being regulated by the thermostat valve **10**.

[0018] **FIG. 2** depicts the thermostat valve **10** in the open position. Inlet housing **30** includes an inlet port **34** with threads **36** for receiving fitting **16**. The outlet housing **32** includes outlet port **38** having similar threads **40** for engagement with fitting **20**. The inlet and outlet ports are interconnected by mating housing threads **42**. An O-ring seal **44** is provided in groove **45** within the outlet housing, and forms a fluid-tight static seal between the housing **30** and the housing **32**.

[0019] The housing includes a central flow path extending between the ports **34** and **38**, with the snap disk **50** positioned within the central flow path and moveable with respect to the housing, as shown in **FIGS. 2 and 3**, from the open position to the closed position. More particularly, the inlet housing includes central through port **46**, and the outer housing includes a central through port **48**. Gas thus flows through the one or more ports **56** provided in the snap disk **50** and through the port **48** when the snap disk is in the open position.

[0020] An elastomeric seal **54** is supported on the outlet housing **32**, and more specifically is restrained from radial movement by the annular lip **52**. A biasing member, such as an elastomeric material ring **62**, engages the periphery of the snap ring **50** and acts to exert a slight force which biases the snap ring to the closed position. Biasing member **62** also accommodates or "takes up" tolerance variations between the housings when fully mated by engagement of mating surfaces **47**. Snap disk **50** is effectively sandwiched between the stop surface **60** on the outlet housing **32** and the elastomeric ring **62**, so that the slight pressure provided by the elastomeric ring **62** exerts a right convex force on the snap ring **50**.

[0021] Once the temperature of the snap ring **50** drops below a selected value, which would be greater than the reaction temperature of the catalyst in the heater **26**, the snap ring will automatically move to the left convex shape, as shown in **FIG. 2**, thereby unsealing the snap ring from the elastomeric seal **54**. Natural gas or propane may thus pass through the ports **56** in the snap ring and through the port **48**, thereby supplying an increased flow rate of gas to the heater to heat the surrounding environment. When fully open, the thermostat valve is capable of passing much more gas than the flow rate used by the heater, but flow through the valve is limited by a downstream flow restrictor within or associated with the heater. Once heated to a desired temperature, snap ring **50** will snap to the closed position as shown in **FIG. 3**, thereby forming a fluid-tight seal with the O-ring **54**. This tight seal is important since the valve, when closed, only passes gas through the restricted flow path discussed below. It is thus important that this restricted gas flow rate be substantially constant.

[0022] Each of the one or more through passageways in the snap disk is positioned radially outward of the elastomeric seal **54**, so that no flow through the port **48** occurs when the snap ring is in the closed position. A small amount of fluid flow continues to pass through the ports **56** in the snap disk, however, then flows through the restricted flow path **58** in the outlet housing **32**, thereby supplying sufficient gas to the heater to prevent the catalyst from cooling below a minimum reaction temperature. In order to insure that the central flow path is closed off when the snap ring is in the **FIG. 3** position, each of the one or more through passageways **56** in the snap ring and the restrictive flow path **56** in the housing are radially outward from the elastomeric seal **54**. Particularly with respect to the restricted flow passageway **58**, this "radially outward" positioning means that at least part of the restricted flow path is radially outward from the seal **54** so that the restricted flow bypass past the seal **54** is provided when the snap ring is in the closed position. At least a portion of the passageway **58** is thus radially outward from the seal **58**, with this restricted flow passageway being in parallel with the central flow path through the elastomeric seal. The snap disk **50**, when closed, may also rest against a stop surface on the housing adjacent the O-ring **54**, as shown in **FIG. 3**. In a preferred embodiment, the restricted flow path **58** has a substantially uniform cross-section the diameter less than 0.04 inches. In a preferred embodiment, the restricted flow path may have a uniform diameter of from 0.015 to 0.025 inches.

[0023] Although **FIGS. 2 and 3** show the elastomeric seal **54** provided on the outlet housing and the restricted flow path **58** in the outlet housing, the seal **54** could be supported on the inlet housing, in which case the restricted flow path could also be provided in the inlet housing.

[0024] **FIG. 4** illustrates the top view of the disk valve **50**, and shows three circumferentially spaced ports **56**. It should be understood that the passageways **56** in the snap disk may have other configurations and, if desired, may extend to an edge surface of the snap disk.

[0025] In another embodiment, the thermally responsive snap member may not be disk shaped, but rather could have a more rectangular configuration, as shown in **FIG. 5**, provided that the width of the snap member is greater than the diameter of the O-ring **54**, so that flow is reliably closed off through the port **48** when the snap member is in the closed position. The snap member **64** thus has parallel side edges **66, 67**. For this embodiment, the passageways past the

snap member may thus be formed by the spacing between the sides of the snap member and the interior wall of the housing. The elastomeric material ring **62** may still be provided, however, for exerting a desired biasing force on the snap member.

[**0026**] **FIG. 5** also shows another technique for forming the restricted flow path. In this case, the snap member **64** is provided with a centrally positioned small through port **68** through the snap member, which may be formed by a laser cutting operation. For this embodiment, the restricted flow path **58** in the housing may thus be eliminated since the snap member, when closed and in sealing engagement with the O-ring **54**, still allows a restricted amount of gas to pass through the disk and then through port **48** to supply a restricted amount of gas to the heater to prevent the heater from cooling below a desired temperature. As previously discussed, the port **68** may have a nominal diameter of about 0.02 inches, and like passageway **58** is shown enlarged for clarity.

[**0027**] **FIGS. 1 and 2** desirably show a straight line central flow path through the housing. It should be understood that this configuration is preferred, although an angled central flow path through the housing could be provided so that the outlet port were positioned, for example, at 90° relative to the inlet port. Those skilled in the art will appreciate that one or both of the inlet housing and outlet housing may include conventional wrench flats for exerting a desired torque on the inlet housing with respect to the outlet housing to insure a reliable sealed connection between the housings. If the restricted flow path in the valve body or in the snap member become plugged, the heater will cool below its operating temperature, so that the heater will safely shut down and the problem easily detected and corrected.

[**0028**] While preferred embodiments of the present invention have been illustrated in detail, it is apparent that modifications and adaptations of the preferred embodiments will occur to those skilled in the art. However, it is to be expressly understood that such modifications and adaptations are within the spirit and scope of the present invention as set forth in the following claims.

What is claimed is:

1. A thermostat valve for controlling gas flow to a catalytic heater, comprising:

a housing having an inlet port, an outlet port, and a central flow path extending between the inlet port and the outlet port;

a thermally responsive snap member positioned within the housing central flow path and moveable with respect to the housing between an open position and a closed position;

an elastomeric seal supported on the housing and circumferentially surrounding the flow path through the housing for engagement with the snap member when in the closed position;

a restricted flow path in the housing in parallel with the central flow path through the elastomeric seal for passing gas to the catalytic heater when the snap disk is in the closed position; and

the snap member forming one or more passageways each positioned outwardly of the elastomeric seal for passing gas when the snap member is in both the open and closed positions.

2. A thermostat valve as defined in claim 1, further comprising:

a biasing member for biasing the snap member toward the closed position.

3. A thermostat valve as defined in claim 2, wherein the biasing member comprises an elastomeric material ring engaging a periphery of the snap member.

4. A thermostat valve as defined in claim 1, wherein the one or more passageways includes a plurality of through passageways through the snap member.

5. A thermostat valve as defined in claim 1, wherein the snap member has a disk shape.

6. A thermostat valve as defined in claim 1, wherein the one or more passageways are positioned between the snap member and the housing.

7. A thermostat valve as defined in claim 1, wherein the housing includes an inlet housing and an outlet housing each having threads for mating engagement.

8. A thermostat valve as defined in claim 7, further comprising:

a housing seal for sealing between the inlet housing and the outlet housing.

9. A thermostat valve as defined in claim 1, further comprising:

the housing including a threaded inlet port and a threaded outlet port;

a threaded inlet fitting for threaded engagement with the threaded inlet port; and

a threaded outlet fitting for threaded engagement with the threaded outlet port.

10. A thermostat valve as defined in claim 1, wherein the restricted flow path has a substantially uniform cross-section with a diameter less than 0.04 inches.

11. A thermostat valve for controlling gas flow to a catalytic heater, comprising:

a housing having an inlet port, an outlet port, and a central flow path extending between the inlet port and the outlet port;

a bi-material snap member positioned within the housing central flow path and moveable with respect to the housing between an open position and a closed position;

an elastomeric seal supported on the housing and circumferentially surrounding the flow path through the housing for engagement with the snap member when in the closed position;

a restricted flow path in the snap member radially inward of the elastomeric seal for passing gas to the heater when the snap member is in the closed position; and

the snap member forming one or more passageways each positioned radially outwardly of the elastomeric seal for passing gas when the snap member is in both the open and closed positions.

12. A thermostat valve as defined in claim 11, further comprising:

a biasing member for biasing the snap member toward the closed position.

13. A thermostat valve as defined in claim 12, wherein the biasing member comprises an elastomeric material ring engaging a periphery of the snap member.

14. A thermostat valve as defined in claim 11, wherein the one or more passageways includes a plurality of through passageways through the snap member.

15. A thermostat valve as defined in claim 11, wherein the housing includes an inlet housing and an outlet housing each having threads for mating engagement.

16. A thermostat valve as defined in claim 11, wherein the snap member has a disk shape.

17. A thermostat valve as defined in claim 11, wherein the one or more passageways are positioned outward of the snap member.

18. A thermostat valve as defined in claim 11, wherein the restricted flow path has a nominal diameter less than 0.04 inches.

19. A thermostat valve for controlling gas flow to a catalytic heater, comprising:

a housing having an inlet port, an outlet port, and a central flow path extending between the inlet port and the outlet port;

a thermally responsive snap disk positioned within the housing central flow path and moveable with respect to the housing between an open position and a closed position;

an elastomeric seal supported on the housing and circumferentially surrounding the flow path through the housing for engagement with the snap disk when in the closed position;

a biasing member for biasing the snap member toward the closed position;

a restricted flow path in one of the housing and the snap disk for passing gas to the catalytic heater when the snap disk is in the closed position; and

the snap member including one or more passageways each positioned radially outwardly of the elastomeric seal for passing gas when the snap member is in the open and closed positions.

* * * * *