...ON SERVICE

(19) Europäisches Patentamt
European Patent Office
Office européen des brevets

(11) Publication number : **0 383 563 B1**

(12) # EUROPEAN PATENT SPECIFICATION

(45) Date of publication of patent specification : **20.04.94 Bulletin 94/16**

(51) Int. Cl.^{5} : **B01L 3/02**

(21) Application number : **90301552.7**

(22) Date of filing : **14.02.90**

(54) **Nozzle geometry for the control of liquid dispensing.**

(30) Priority : **14.02.89 US 310151**

(43) Date of publication of application : **22.08.90 Bulletin 90/34**

(45) Publication of the grant of the patent : **20.04.94 Bulletin 94/16**

(84) Designated Contracting States : **BE CH DE FR GB IT LI LU NL**

(56) References cited :
EP-A- 0 082 263
US-A- 4 041 995
US-A- 4 237 095
US-A- 4 347 875

(73) Proprietor : **EASTMAN KODAK COMPANY**
343 State Street
Rochester, New York 14650-2201 (US)

(72) Inventor : **Columbus, Richard Luwis, c/o EASTMAN KODAK COMP.**
Patent Department, 343 State Street
Rochester, New York 14650 (US)

(74) Representative : **Phillips, Margaret Dawn et al**
Kodak Limited Patent Department Headstone Drive
Harrow, Middlesex HA1 4TY (GB)

EP 0 383 563 B1

Note : Within nine months from the publication of the mention of the grant of the European patent, any person may give notice to the European Patent Office of opposition to the European patent granted. Notice of opposition shall be filed in a written reasoned statement. It shall not be deemed to have been filed until the opposition fee has been paid (Art. 99(1) European patent convention).

Description

The invention is directed to containers used to aspirate and then dispense liquids for analysis.

An entire industry has developed around the use of dried test elements for blood analyzers that contain the necessary reagents "all in the slide". Because of the high precision capable from such test elements, it is essential that patient samples be dispensed both with correspondingly high volumetric precision and consistent wetted area. More specifically, in the dispensing of about 10µl volumes, the precision needs to be within 1% or less of the nominal value. This is not a trivial feat, since patient blood sera have viscosities that can vary from 1 to 20mPa (1 to 20cps), and a surface tension that can vary from 35 to 72mN/m. The task is made even more difficult because, for each assay to be run on the varying test elements, a different surface wettability is often presented to the dispensing station. Any chemistries encouraging non-wetting cause the dispensed liquid to try to perfuse up the side of the already-wetted nozzle. Perfusion, of course, causes gross variations in dispensing precision. Perfusion, to the extent it occurs, can be detected in peak pressures generated in the container during dispensing.

The above situation is made worse by the fact that the most economical method of getting the patient sample into the dispensing container, is by aspiration from a gross sample supply. In order to avoid having to wipe the exterior of the dispensing container used to dip and aspirate, the dispensing container must be designed keeping in mind that some residual patient sample will remain on the outside surface of the dispensing container, where it can easily interfere with dispensing if it has access to the dispensing orifice. In particular, at best only a small amount of residuals from the exterior surface is needed to combine with the desired amount dispensed from the interior, before the imprecision in dispensing 10µl exceeds 1%. At worst, large amounts of residuals can spontaneously fall off, contaminating equipment, test elements, or both.

The amount and location of those residuals becomes a factor of many conditions which are not always easily controlled, including the nature and concentration of sample proteins, speed of withdrawal of the dispensing container from the gross sample supply, the viscosity of this particular sample, the depth of submersion for aspiration, and the surface area of the pipette. Of these, only the last-named factor is determinative ab initio (by the container used in the analyzer), and this factor is not easily altered from specimen to specimen to meet changing needs.

A disposable dispensing container as described in US-A-4347875 goes a long way towards solving such dispensing problems. However, even it has trouble meeting universal needs, that is, those peculiar to some of the more esoteric test element chemistries, including total protein and CO_2, or to peculiar patient sample conditions, e.g. IgG multiple myeloma. Therefore, dispensing with the container described in US-A-4347875 can produce an occasional unsatisfactory result, manifesting itself either as volume imprecision, or in the case of liquid perfusion a failure to dispense altogether. More specifically, a nominal 10µl drop varies (in 10 dispensing events with Dade™ Moni-Trol™ ES level II general multi-purpose control serum prepared with human blood and supplied ready to use with a bicarbonate diluent by American Scientific Products as a test liquid) from 9.259µl mean value (± O.368) to as much as 10.583µl mean value, ± 0.166. Better results than this are desired, for example, results in which the mean value for ten drops is never less than 9.93µl nor more than 10.05µl with a tolerance of ± 0.1.

It is therefore an object of the present invention to provide a dispensing device which avoids the problems noted above, even when using liquid suspensions of greatly varying properties.

More specifically, in accordance with one aspect of the present invention, there is provided a dispensing device for aspirating liquid, storing the aspirated liquid, and then dispensing the stored liquid a fraction at a time, the device comprising

a compartment capable of holding liquid,

a passageway extending from the compartment and terminating in an aperture, and

a nozzle portion fluidly connected to the passageway and terminating in a liquid-spreading first exterior surface disposed around the aperture, the nozzle portion including a second exterior surface inclined to and extending from the first exterior surface at a first angle;

characterized in that the second surface further includes a series of at least two generally annular stepped lands of increasing outer dimensions, spaced up the side of the nozzle portion to form a second overall angle measured from the plane of the first surface and having an value between 40° and 60° to facilitate drawing off of the residual liquid from the nozzle portion;

and in that the first angle has a value between 6° and 30° so as to be effective to force liquid on the exterior surfaces to detach from a source of liquid only when liquid has retreated down the inclined surface from the first exterior surface.

Preferably, the lands each have a surface which is generally parallel to the first surface with a predetermined radial extension (R_N - R_{N-1}), the spacing of each of the stepped lands away from an adjacent land or

surface closer to the aperture, and the predetermined radial extension, being effective to break up liquid remaining on the second exterior surface after detachment into isolated fillets of liquid.

It is an advantageous feature of the invention that a dispensing container is provided which automatically minimizes the amount of residual liquid remaining on the exterior after aspiration.

It is a related advantageous feature of the invention that a dispensing container is provided which is generally free of perfusion errors during dispensing, regardless of variations which occur in the rheological properties of the liquid being dispensed.

For a better understanding of the present invention, reference will now be made, by way of example only, to the accompanying drawings in which:

Figure 1 is a fragmentary schematic illustration of aspirating and dispensing steps carried out by a dispensing device according to the present invention;

Figures 2A and 2B are an elevational view and a fragmentary enlarged sectional view of a prior art dispensing device;

Figure 3 is an elevational view of a dispensing device constructed in accordance with the invention;

Figure 4 is an enlarged fragmentary elevational view of the portion marked "IV" in Figure 3;

Figures 5A to 5E are fragmentary elevational views, partly in section, illustrating the criticality of certain features of the invention;

Figures 6 and 7 are views similar to that of Figure 4 but illustrating alternative embodiments of the invention; and

Figure 8 is an end view of a device of the invention, illustrating yet another embodiment.

The invention is hereinafter described in connection with the preferred embodiments, in which the dispensing device is a disposable tip for mounting onto apparatus such as a manual or automated pipette, to dispense onto a dried test element serum which can be first aspirated into and contained in the tip. In addition, the invention is applicable to a dispensing device which is a permanent part of an aspirator or dispenser, or of a disposable blood separation device, or of a container wherein only the nozzle portion is disposable. The invention is useful regardless of the liquid being dispensed or the test element which receives it. It is further useful whether or not the device itself stores liquid prior to dispensing, or merely is fluidly connected to a separate device which provides such storage.

The terms "up", "down", "bottom" and the like refer to orientations of parts during their preferred use, in an environment in which gravity is present. In addition, however, the invention is useful in an environment in which the "up" direction is arbitrary, such as a space station.

The problems to which the invention is directed are illustrated in Figure 1. A dispensing container 10 is mounted on a pipette device 12, and is inserted, as shown by arrow 14, into a gross supply of liquid L in container 16, see Figure 1A. When a partial vacuum is generated in pipette device 12, liquid such as blood sera is drawn into dispensing container 10, as shown by arrows 18. The container 10 and device 12 are then withdrawn, in the direction of arrow 20 in Figure 1B, and liquid breaks off, leaving drops "d" behind on the exterior surface of the container 10. The container 10 is then placed adjacent to a test element E, as shown in Figure 1C, and a partial pressure is generated to dispense a portion of the contained liquid, as indicated by arrow 22. If the surface of that test element is relatively non-wetting, and/or if drops "d" touch the liquid being dispensed, perfusion of the liquid up the outside wall of container 10 is likely to occur. This in turn leads to significant variations in the amount of liquid received by element E, compared to the intended amount, of e.g. 10µl.

One solution to this problem is described in US US-A-4347875, and is illustrated for comparison in Figures 2A and 2B. In this dispensing device or container 10, a liquid storage compartment 24 is provided with a nozzle portion 26 comprising a wall member 28 having a bottom surface 30. Dispensing aperture 32 is formed in that surface. Nozzle portion 26 also includes an exterior surface 34 which has means at predetermined loci spaced (preferably at a distance "h" from surface 30) for attracting excess liquid on surface 34 away from surface 30. Most preferably, such attracting means is the portion 40 of surface 34 which is angled at an angle α to the vertical as shown, to form a conical surface. Distance "h" is preferably a value of from about 0.02cm to about 0.5cm. Upper portion 44 is optionally ribbed to allow easier handling of the container.

In accordance with the present invention, container 10 is improved in that it is provided with a new nozzle configuration 50, as shown in Figure 3 and more clearly in Figure 4. As before, container 10 includes a liquid storage compartment 24 which can acquire by aspiration as much as 400µl of liquid for dispensing. Nozzle portion 50 has been modified, however, to reflect certain liquid flow properties described hereinafter. As to its structure, nozzle 50 is formed from a wall 52 which is wrapped around a passageway 54 which fluidly connects orifice 32 with compartment 24. Most preferably, container 10 and especially nozzle 50 has an axis of symmetry 56 which is centered in passageway 54 and aperture 32.

As before, nozzle 50 includes a bottom surface 30 extending a distance, preferably a radius R_1, from axis

56. Preferably surface 30 is an annulus. Useful values of R_1 are set forth hereinafter. However, unlike the design shown in Figure 2, surface 30 is joined directly at edge 60, with a surface 62 inclined at an angle α to surface 30, the sign of angle α being such as to cause surfaces 30 and 62 to form a convex surface. Surface 62 is generally annular and extends to subtend a distance, preferably a value which is the difference between radius R_2 and R_1, measured from axis 56. As used herein "generally annular" is satisfied if the shape approximates an annulus. In addition, nozzle 50 features a series of lands 64 and 66 stepped back along axis 56, up the side of the nozzle. Each of these lands is preferably generally annular in shape and generally parallel to surface 30 and has a dimension, preferably a radius R_3 and R_4, respectively, measured from axis 56, so that the surface area of each land is a function of the difference in the two bounding radii, R_N-R_{N-1}, where N is 3 for land 64, and N is 4 for land 66. Each land is stepped back, preferably straight back, so as to be spaced along axis 56 by a distance of h_2 and h_3 respectively, from the adjacent surface closer to surface 30. (Distance h_1 for surface 62 is, of course, predetermined by the value of angle α and radius R_2.)

An important feature of lands 64 and 66 is that their outermost radii R_3 and R_4 respectively give to the exterior surface of nozzle 50, an overall angle β, measured from the plane of surface 30, which is effective to give maximum drainage of liquid on the exterior of nozzle 50, as described hereinafter. Other important features are the recesses formed by the step in each land, and distances h_2 and h_3. Each step forms a gap in the overall cone shape suggested by angle β, with a step-back surface 68 providing distance h_2 and h_3, such gaps being effective to trap and break up sheaths of liquid left on the exterior of nozzle 50 during withdrawal of the container from the gross liquid supply.

It will be recognized that the shape of lands 64 and 66 need only be roughly annular, in which case R_N-R_{N-1} is not strictly speaking determined by subtracting radii. In cases where R_N and R_{N-1} are dimensions of a non-circular curve, as shown in the embodiment of Figure 8, the value of R_N-R_{N-1} is simply the width of that land as it extends around step-back surface 68. Although eight-sided rings are shown, the number and even existence of "sides" is not critical.

The following Table gives a list of preferred ranges, and of an exemplary "most preferred" value, for each of the aforementioned dimensions.

Dimensional Values

Items	Range	Most Preferred
Angle α	6°–30°	12°
Angle β	40°–60°	53°
radius R_1	0.057–0.076cm	0.063cm
radius difference (R_2–R_1)	0.013–0.13cm	0.063cm
radius difference (R_3–R_2)	0.013–0.13cm	0.076cm
radius difference (R_4–R_3)	0.013–0.13cm	0.076cm
height h_2*	0.035–0.08cm	0.05cm
height h_3*	0.02–0.05cm	0.04cm

*The reason for these being different from each other is explained hereinafter.

Most preferably, each of the edges 70 created by the intersection of a surface such as land 64, 66, or surface 62, with the vertically-extending step-back surface 68, is relatively sharp, that is, has a radius of curvature not to exceed about 0.02cm.

The significance of each of the topological features of nozzle 50 will now be described, with reference to Figures 5A to 5D.

Angle β is selected because of the manner in which liquid drains from nozzle 50 as container 10 is withdrawn, as shown by arrow 20 in Figure 5A. High-speed studies have shown that the first events in the with-

drawal tend to leave a sheath of liquid "S", which forms an angle to the remaining liquid L that is in fact a value of about 53°, or angle β if β is 53°. Thus, the best value for βis a value that mimicks this angle, although variances of -13° to +7° will also work, though less efficiently.

Angle α is selected because of the next event in the withdrawal of nozzle 50 from liquid L, as shown in Figure 5B. At the moment nozzle 50 and its residual liquid are ready to break free of liquid L in container 16, the residual liquid on surface 30 of the nozzle forms with liquid L, a "wiping angle" that is about 6 to 30°, usually about 12°. Thus, the cleanest construction to encourage the liquid "L" to wipe cleanly off of surface 62, and the preferred construction, is one in which surface 62 is inclined at that same angle. Although other values are not as efficient, angle α can be varied as shown in the Table.

It will also be apparent from Figures 5B and 5C the function performed by the steps 64 and 66. The space left by these steps provides three-dimensional fillets of volume that receive and redistribute fillet or droplet portions "f" of the residual sheath, thus breaking up the sheath, as shown in Figure 5B. Such breakage is critical, because any sheath that remains as a complete volume, can have enough weight to slide down the nozzle and contact the dispensed portion "P", as shown in Figure 5C, and unacceptably change the volume of that dispensed portion. Fillets "f" are disconnected from each other, and remain trapped between lands 64 and 66, and the step-back surface 68 producing the land. Thus, accurate dispensing can take place with essentially no unacceptable change in the intended volume.

Figure 5D illustrates the reason for h_2 and h_3 having different values. As shown in this Figure, the 10µl drop D' to be dispensed hangs from surface 30 just prior to wetting the test element E. If this drop readily wets the surface of element E, then the liquid will also wet surface 62 and move to position D" on nozzle 50, while dispensing into the element. The area wetted on element E is area A. If however the surface is relatively non-wetting then additional liquid volume will appear in the initial drop D" prior to soaking into the test element to produce a drop D^{III} of 10µl volume (since element E is slow to wet), as shown in Figure 5E, which proceeds to bulge out from the solid line position to the dotted line position. When angle γ reaches and exceeds about 90°, the liquid jumps beyond surface 62 and onto land 64, as shown by the dashed line, D^{IV}. The surface area of land 64, taken with the areas of surfaces 62 and 30, will support a 10µl volume while maintaining angle γ less than 90°. However, land 66 is a different story. Its separation distance h_3 is selected to be large enough so that the volume that can be supported from surfaces 62, 64 and 66 combined, exceeds the total volume to be dispensed. Thus, there is insufficient differential pressure created at radius R_3 to force drop D^{IV} to spread off of land 64 onto land 66. The wetted area A of element E remains relatively constant, as shown in Figures 5D and 5E. h_3 is preferably no smaller than the 0.02cm minimum stated in the Table above, for the reason that the step created at land 66 for a given angle of β becomes too small to ensure that sheath S (Figure 5A) is effectively broken up into isolated 3-dimensional fillets of liquid extending around the steps' perimeter (Figure 5C).

Additional lands can be added further "up" the nozzle towards the storage compartment, as shown in Figure 6. Parts similar to those previously described bear the same reference numeral to which the distinguishing suffix "A" has been appended.

Thus, referring to Figure 6, container 10A has a nozzle 50A constructed substantially as before, with a bottom surface 30A, annular ring surface 62A, and steps 64A and 66A. In addition, however, two other steps 80 and 81 have been added each spaced directly back via a step-back wall 82 to give a separation distance h_4 and h_5. Most preferably, each step 80 and 81 has a radial extension R_5-R_4 or R_6-R_5. R_5-R_4 has the same range and preferred value as R_4-R_3, whereas R_6-R_5 is substantially less. Furthermore, h_4 and h_5 preferably have about the same range and preferred value as h_3. Angles α and β are as before.

To establish the superior nature of this dispensing container, compared to the container described in the prior art with reference to Figure 2, ten containers constructed in accordance with Figure 2 and Figure 6 were tested, each with 300µl of Dade™ Moni-Trol™ ES level II control serum. They were each mounted on the same automated pipette which was programmed to dispense 10µl drops. For each container, nine drops were dispensed, after the liquid was first aspirated in using the process of Figures 1A and 1B shown above. The volumes so dispensed were measured, along with the mean values and the standard deviations. The following are the results:

Drop #	Figure 2 Device		Figure 6 Device	
	mean volume	standard deviation	mean volume	standard deviation
1st Drop	9.766	0.699	11.064*	0.184
2nd Drop	9.259	0.368	9.993	0.147
3rd Drop	9.912	1.136	10.009	0.085
4th Drop	9.656	0.229	10.044	0.112
5th Drop	9.919	0.113	9.987	0.063
6th Drop	10.237	0.045	9.948	0.058
7th Drop	10.583	0.166	9.938	0.092
8th Drop	10.501	0.216	9.976	0.059
9th Drop	10.268	0.146	9.976	0.117

*An artifact due to software optimized to work with the Figure 2 device.

For the Figure 2 device, this gives a three σ (sigma) total (three standard deviations) of 0.48 within-drop variation, and 0.37 as a drop-to-drop variation. For the Figure 6 device, if the first drop is ignored for the artifact that it is (due to software optimized to the Figure 2 configuration only), then the 3σ (sigma) variations for within-drop is only 0.11 and for drop-to-drop is only 0.033.

It is not essential that each land be formed by a step-back surface 68 which is always parallel to the container axis. Instead, such step-back surfaces can be inclined to the axis, as shown in Figure 7, to form an acute angle ϕ between the lands and the step-back surface. Parts similar to those previously described have the same reference numeral, to which the distinguishing suffix "b" has been appended. Thus, container 10b has a nozzle 50b in which surfaces 30b and 62b are as before. However, lands 64b and 66b are spaced back by step-back walls 100 which are inclined by acute angle ϕ to axis 56b. The overall effect on angles α and β is, however, nil.

As in the case of the device of Figure 2, the containers of this invention can be manufactured from any material, most preferably synthetic polymers.

Claims

1. A dispensing device (10) for aspirating liquid, storing the aspirated liquid, and then dispensing the stored liquid a fraction at a time, the device comprising

a compartment (24) capable of holding liquid,

a passageway (54) extending from the compartment (24) and terminating in an aperture (32), and

a nozzle portion (50; 50A; 50b) fluidly connected to the passageway (54) and terminating in a liquid-spreading first exterior surface (30; 30A; 30b) disposed around the aperture (32), the nozzle portion (50; 50A; 50b) including a second exterior surface (62; 62A; 62b) inclined to and extending from the first ex-

terior surface (30; 30A; 30b) at a first angle (α);

characterized in that the second surface (62; 62A; 62b) further includes a series of at least two generally annular stepped lands (64, 66; 64A, 66A, 80, 81; 64b, 66b) of increasing outer dimensions, spaced up the side of the nozzle portion (50; 50A; 50b) to form a second overall angle (β) measured from the plane of the first surface (30; 30A; 30b) and having an value between 40° and 60° to facilitate drawing off of the residual liquid from the nozzle portion (50; 50A; 50b);

and in that the first angle (α) has a value between 6° and 30° so as to be effective to force liquid on the exterior surfaces (30, 62; 30A, 62A; 30b, 62b) to detach from a source of liquid only when liquid has retreated down the inclined surface (62; 62A; 62b) from the first exterior surface (30; 30A; 30b).

2. A device according to claim 1, wherein the lands (64, 66; 64A, 66A, 80, 81; 64b, 66b) each have a surface which is generally parallel to the first surface (30; 30A; 30b) with a predetermined radial extension (R_N - R_{N-1}), the spacing of each of the stepped lands (64, 66; 64A, 66A, 80, 81; 64b, 66b) away from an adjacent land or surface closer to the aperture, and the predetermined radial extension, being effective to break up liquid remaining on the second exterior surface after detachment into isolated fillets (f) of liquid.

3. A device according to claim 2, wherein the predetermined radial extension of the annular land surfaces (R_N - R_{N-1}) is an amount of between about 0.01cm and about 0.13cm.

4. A device according to any one of claims 1 to 3, wherein the spacing of the stepped lands (64, 66; 64A, 66A, 80, 81; 64b, 66b) along a central axis (56; 56A; 56b) is between about 0.035cm and 0.08cm for the stepped land (64; 64A; 64b) closest to the first exterior surface (30; 30A; 30b), and between about 0.02cm and 0.05cm for each of the other stepped lands (66; 66A, 80, 81; 66b) measured from the adjacent land (64; 64A, 66A, 80; 64b) closer to the first exterior surface (30; 30A; 30b).

5. A device according to any one of claims 1 to 4, wherein the second angle (β) has a value of 53°.

6. A device according any one of claims 1 to 4, wherein the first angle (α) has a value of 12°.

7. A device according to claim 1, wherein the nozzle portion (50A) comprises a liquid-confining wall wrapped around an axis (56A) of symmetry and terminating in a liquid-spreading first exterior surface (30A), the first surface (30A) having an aperture (32) therein fluidly communicating with the compartment (24), the wall having a second exterior surface (62A) extending from the first exterior surface (30A) up the side of the nozzle (50A), configured to force liquid on the second surface (62A) to not interact with liquid dispensed through the aperture (32); the second surface comprising an annular surface (62A) extending directly from the first surface (30A) at an angle of about 12°, measured from the first exterior surface extended (30A), and a series of four stepped lands (64A, 66A, 80, 81) of increasing outer dimensions, spaced up the side of the nozzle (50A) to form an overall angle of about 53°, measured from the first exterior surface (30A) extended, each of the lands (64A, 66A, 80, 81) having an annular surface which is generally parallel to the first surface (30A) with a radial extension dimension (R_N - R_{N-1}) which is between about 0.013cm and about 0.13cm, the one (64A) of the lands closest to the first exterior surface (30A) being spaced from the first annular surface (30A) along the axis a distance of about 0.05cm, and the remaining (66A, 80, 81) of the stepped lands being spaced along the axis (56) from the adjacent land closer to the first exterior surface (30A) a distance of about 0.04cm.

Patentansprüche

1. Dosiervorrichtung (10) zum Ansaugen, Aufnehmen und Abgeben einer Flüssigkeit in jeweils geringen Mengen, wobei die Vorrichtung folgende Teile umfaßt:
eine Kammer (24) zur Aufnahme von Flüssigkeit,
ein von der Kammer (24) ausgehender und in einer Öffnung (32) endender Kanal (54), und
ein Mundstück (50; 50A; 50b), das mit dem Kanal (43) verbunden ist und in einer Flüssigkeit verteilenden, um die Öffnung (32) angeordneten ersten äußeren Fläche (30; 30A; 30b) endet, an die sich eine zweite äußere Fläche (62; 62A: 62b) anschließt, welche gegenüber der ersten äußeren Fläche (30; 30A; 30b) geneigt ist und davon unter einem ersten Winkel (α) ausgeht,
dadurch gekennzeichnet, daß die zweite Fläche (62; 62A; 62b) eine Reihe von mindestens zwei im wesentlichen ringförmigen Stufen (64, 66; 64A, 66A, 80, 81; 64b, 66b) mit sich vergrößernden äußeren Abmessungen aufweist, die an der Seite des Mundstücks (50; 50A; 50b) nach oben hin beabstandet von-

einander angeordnet sind und ausgehend von der Ebene der ersten Fläche (30; 30A; 30b) einen zweiten Gesamtwinkel (β) zwischen 40° und 60° bilden, um ein Absaugen der restlichen Flüssigkeit vom Mundstück (50; 50A; 50b) zu erleichtern, und daß der erste Winkel (α) einen Wert zwischen 6° und 30° besitzt und dadurch auf den äußeren Flächen (30, 62; 30A, 62A; 30b, 62b) befindliche Flüssigkeit von einer Flüssigkeitsquelle nur dann losgelöst werden kann, wenn die Flüssigkeit von der ersten äußeren Fläche (30; 30A; 30b) auf die geneigte Fläche (62; 62A; 62b) zurückgewichen ist.

2. Vorrichtung nach Anspruch 1, dadurch gekennzeichnet, daß die Stufen (64, 66; 64A, 66A, 80, 81; 64b, 66b) jeweils eine Fläche aufweisen, die im wesentlichen parallel zur ersten Fläche (30; 30A; 30b) verläuft und eine vorbestimmte radiale Zunahme (R_N - R_{N-1}) besitzt, wobei durch den Abstand jede der Stufen (64, 66; 64A, 66A, 80, 91; 64b, 66b) weg von einer benachbarten Stufe oder einer Fläche, die näher an der Öffnung liegt, und die radiale Zunahme bewirken, daß die auf der zweiten äußeren Fläche verbleibende Flüssigkeit nach ABlösung in einzelne Flüssigkeitstropfen (f) zerfällt.

3. Vorrichtung nach Anspruch 2, dadurch gekennzeichnet, daß es sich bei der vorbestimmten radialen Erweiterung der ringförmigen Stufen (R_N - R_{N-1}) um einen Betrag zwischen etwa 0,01 cm und etwa 0,13 cm handelt.

4. Vorrichtung nach einem der Ansprüche 1 bis 3, dadurch gekennzeichnet, daß der Abstand der Stufen (64, 66; 64A, 66A, 80, 81; 64b, 66b) entlang der Hauptachse (56; 56A; 56b) für den der ersten äußeren Fläche (30; 30A; 30b) am nächsten liegenden Stufen (64; 64A; 64b) zwischen etwa 0,035 cm und 0,08 cm liegt und für alle anderen Stufen (66; 66A, 80, 91; 66b) zwischen etwa 0,02 cm und 0,05 cm liegt, gemessen von der benachbarten Stufe (64; 64A, 66A, 80; 646) aus, der der ersten äußeren Fläche (30; 30A, 30b) am nächsten liegt.

5. Vorrichtung nach einem der Ansprüche 1 bis 4, dadurch gekennzeichnet, daß der zweite Winkel (β) 53° beträgt.

6. Vorrichtung nach einem der Ansprüche 1 bis 4, dadurch gekennzeichnet, daß der erste Winkel (α) 12° beträgt.

7. Vorrichtung nach Anspruch 1, dadurch gekennzeichnet, daß das Mundstück (50A) eine um eine Symmetrieachse (56A) gelegte, flüssigkeitabsperrende Wand aufweist, die in einer Flüssigkeit verteilenden ersten äußeren Fläche (30A) endet, wobei die erste Fläche (30A) eine mit der Kammer (24) in Verbindung stehende Öffnung (32) besitzt und die Wand eine von der ersten äußeren Fläche (30A) aus an der Seite des Mundstücks (50A) hinaufverlaufende zweite äußere Fläche (62A) aufweist, die so ausgebildet ist, daß auf der zweiten Fläche (62A) befindliche Flüssigkeit nicht mit der durch die Öffnung (32) dosierten Flüssigkeit in Berührung kommt; wobei die zweite Fläche eine ringförmige Öffnung (62A) aufweist, die unmittelbar von der ersten Fläche (30A) unter einem Winkel von etwa 12° ausgeht, gemessen von der ersten äußeren Fläche (30A) aus, und eine Reihe von vier Stufen (64A, 66A, 80, 81) mit sich vergrößernden äußeren Abmessungen, die an der Seite des Mundstücks (50A) nach oben hin beabstandet voneinander angeordnet sind und, gemessen von der ersten äußeren Fläche (30A) aus, einen Gesamtwinkel von 53° bilden, wobei jede der Stufen (64A, 66A, 80, 91) eine ringförmige Fläche aufweist, die zur ersten Fläche (30A) im wesentlichen parallel verläuft und mit einer radialen Zunahme (R_N - R_{N-1}) versehen ist, die zwischen etwa 0,013 cm und etwa 0,13 cm liegt, wobei ferner einer (64A) der Stege, der der ersten äußeren Fläche (30A) am nächsten liegt, von der ersten ringförmigen Fläche (30A) entlang der Achse etwa 0,05 cm beabstandet ist, und die übrigen (66A, 80, 91) Stufen entlang der Achse (56) von der benachbarten Stufe, der der ersten äußeren Fläche (30A) näher liegt, etwa 0,04 cm beabstandet ist.

Revendications

1. Dispositif de distribution (10) pour aspirer un liquide, l'emmagasiner et le distribuer séquentiellement par fractions, dispositif comprenant :

un compartiment (24) capable de maintenir du liquide,

un conduit (54) s'étendant à partir dudit compartiment (24) et se terminant par une ouverture (32), et

une embouchure (50 ; 50A ; 50b) reliée, du point de vue du liquide, audit conduit (54) et se terminant par une première surface extérieure (30 ; 30A ; 30b) servant à l'étalement du liquide et disposée autour

de l'ouverture (32), ladite embouchure (50 ; 50A ; 50b) comprenant une seconde surface extérieure (62 ; 62A ; 62b) s'étendant à partir de ladite première surface extérieure (30 ; 30A ; 30b) et inclinée avec un angle (α) à partir de cette surface ;

caractérisée en ce que la seconde surface (62 ; 62A ; 62b) comprend en plus une série d'au moins deux gradins (64, 66 ; 64A, 66A, 80, 81 ; 64b, 66b) pratiquement annulaires de dimensions extérieures croissantes, espacés des côtés de ladite embouchure (50 ; 50A ; 50b) pour délimiter un second angle (β) enveloppe mesuré par rapport au plan de ladite première surface (30 ; 30A ; 30b) et dont la valeur est comprise entre 40° et 60° de manière à faciliter l'évacuation du liquide résiduel à partir de l'embouchure (50 ; 50A ; 50b)

et en ce que ledit premier angle (α) a une valeur comprise entre 6° et 30° de manière à forcer le liquide sur les surfaces extérieures (30, 62 ; 30A ; 62A ; 30b, 62b) pour qu'il ne se détache d'une source de liquide que lorsque le liquide s'est retiré de ladite surface inclinée (62 ; 62A ; 62b).

2. Dispositif selon la revendication 1, dans lequel les gradins (64, 66 ; 64A, 66A, 80, 81 ; 64b, 66b) présentent chacun une surface pratiquement parallèle à ladite première surface (30 ; 30A ; 30b) et un accroissement de dimension dans le sens radial ($R_N - R_{N-1}$), prédéterminé, l'espacement de chacun des gradins (64, 66 ; 64A, 66A, 80, 81 ; 64b, 66b) avec un gradin adjacent ou avec une surface plus proche de l'ouverture, et ledit accroissement radial étant efficace pour décomposer la masse du liquide, restant sur ladite seconde surface extérieure après détachement, en filets (f) de liquide isolés.

3. Dispositif selon la revendication 2, dans lequel l'accroissement radial prédéterminé ($R_N - R_{N-1}$) est compris entre 0,1 mm et 1,3 mm.

4. Dispositif selon l'une quelconque des revendications 1 à 3, dans lequel l'espacement des gradins (64, 66 ; 64A, 66A, 80, 81 ; 64b, 66b) mesuré suivant l'axe (56 ; 56A ; 54b) est compris entre 0,35 mm et 0,8 mm entre le gradin le plus proche de ladite première surface extérieure (30 ; 30A ; 30b) et cette dite première surface, et entre 0,2 mm et 0,5 mm entre chacun des autres gradins (66 ; 66A, 80, 81 ; 66b).

5. Dispositif selon l'une quelconque des revendications 1 à 4, dans lequel ledit second angle enveloppe (β) présente une valeur de 53°.

6. Dispositif selon l'une quelconque des revendications 1 à 4, dans lequel ledit premier angle (α) présente une valeur de 12°.

7. Dispositif selon la revendication 1, dans lequel l'embouchure (50A) comprend une paroi destinée à confiner un liquide, enroulée autour d'un axe (56A) de symétrie, et se terminant par une première surface extérieure (30A) destinée à étendre le liquide, ladite première surface (30A) ayant une ouverture (32) qui communique fluidiquement avec le compartiment (24), la paroi possédant une seconde surface extérieure (62A) s'étendant à partir de ladite première surface extérieure (30A) vers le haut de ladite embouchure (50a), agencée de manière à forcer le liquide située sur ladite seconde surface (62A) à ne pas interagir avec le liquide distribué au travers de l'ouverture (32) ; la seconde surface comprenant une surface annulaire (62A) s'étendant directement à partir de ladite première surface (30A) avec un angle d'environ 12°, mesuré à partir du plan de ladite première surface extérieure (30A) et une série de quatre gradins (64A, 66A, 80, 81) de dimension externe croissante, espacés l'un de l'autre suivant le côté de l'embouchure (50A) pour délimiter un angle enveloppe d'environ 53°, mesuré à partir du plan de ladite première surface extérieure (30A), chacun desdits gradins (64A, 66A, 80, 81) présentant une surface annulaire qui est pratiquement parallèle à ladite première surface (30A) avec un accroissement dans la dimension radiale ($R_N - R_{N-1}$) compris entre 0,13 mm et 1,3 mm, le gradin le plus proche de ladite première surface extérieure (30A) étant situé, mesuré suivant l'axe, à environ 0,5 mm de cette première surface et la distance mesurée suivant l'axe, entre deux gradins adjacents étant d'environ 0,4 mm.

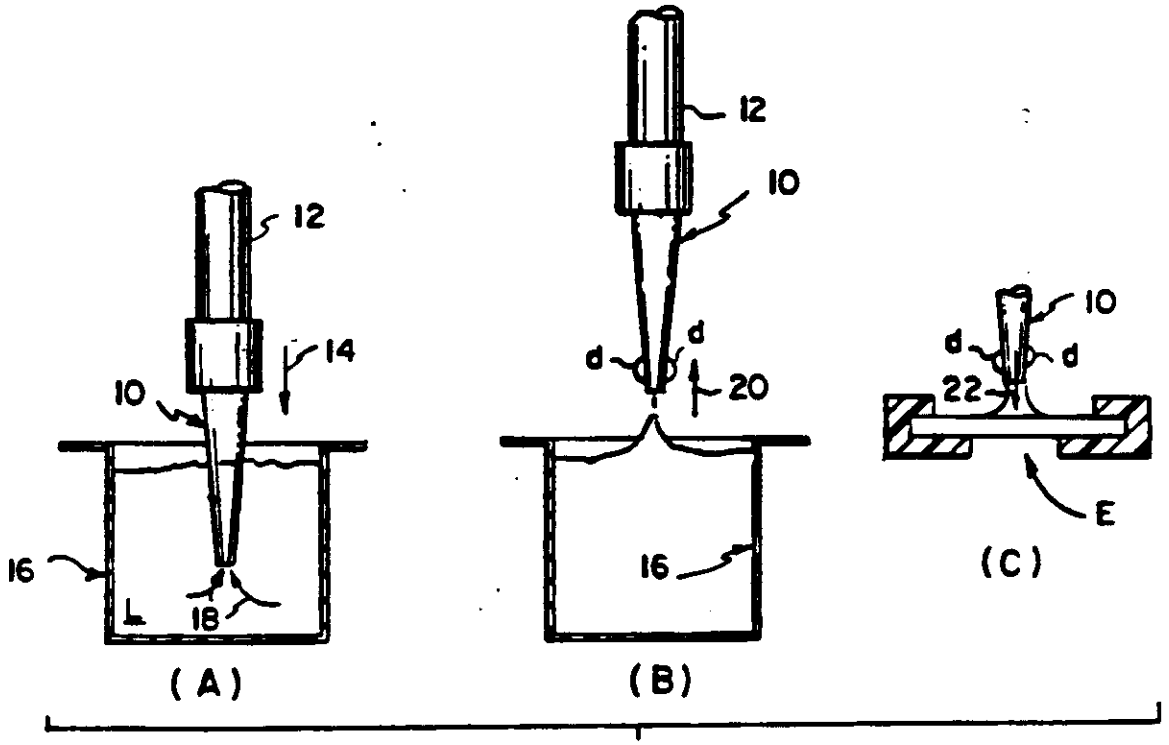

FIG. 1

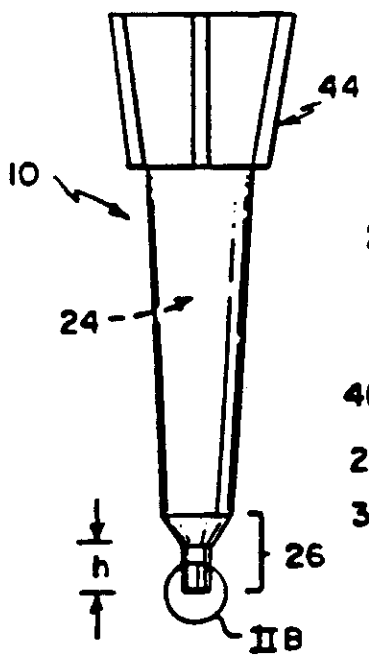

FIG. 2A
PRIOR ART

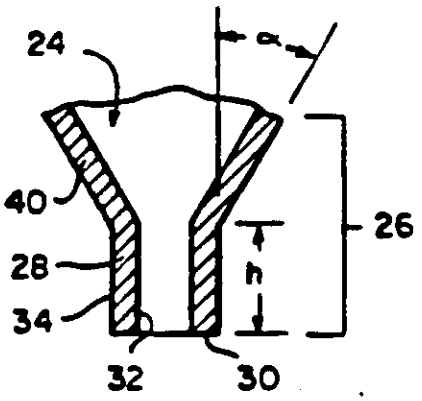

FIG. 2B
PRIOR ART

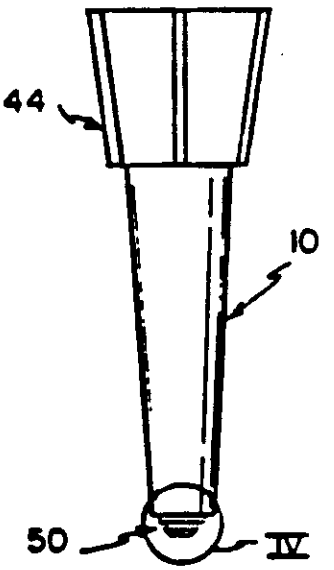

FIG. 3

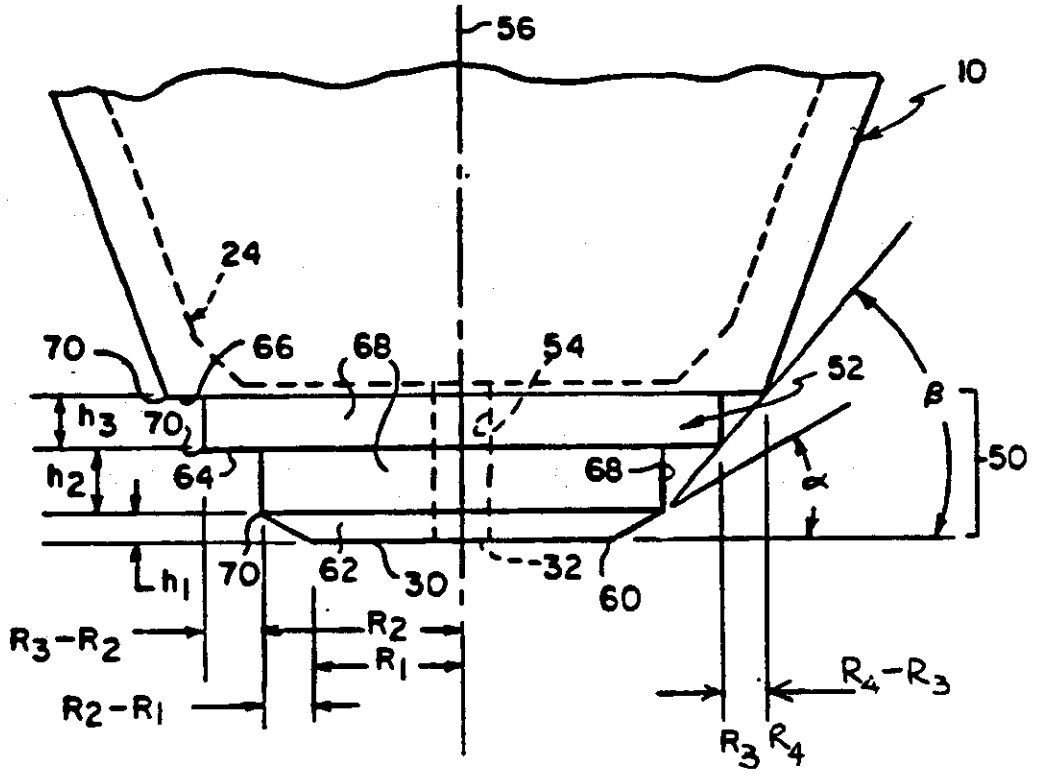
56
10
24
70
66
68
54
52
β
50
h3
70
h2
64
68
α
h1
70
62
30
32
60
R3-R2
R2
R1
R4-R3
R2-R1
R3
R4

FIG. 4

FIG. 6

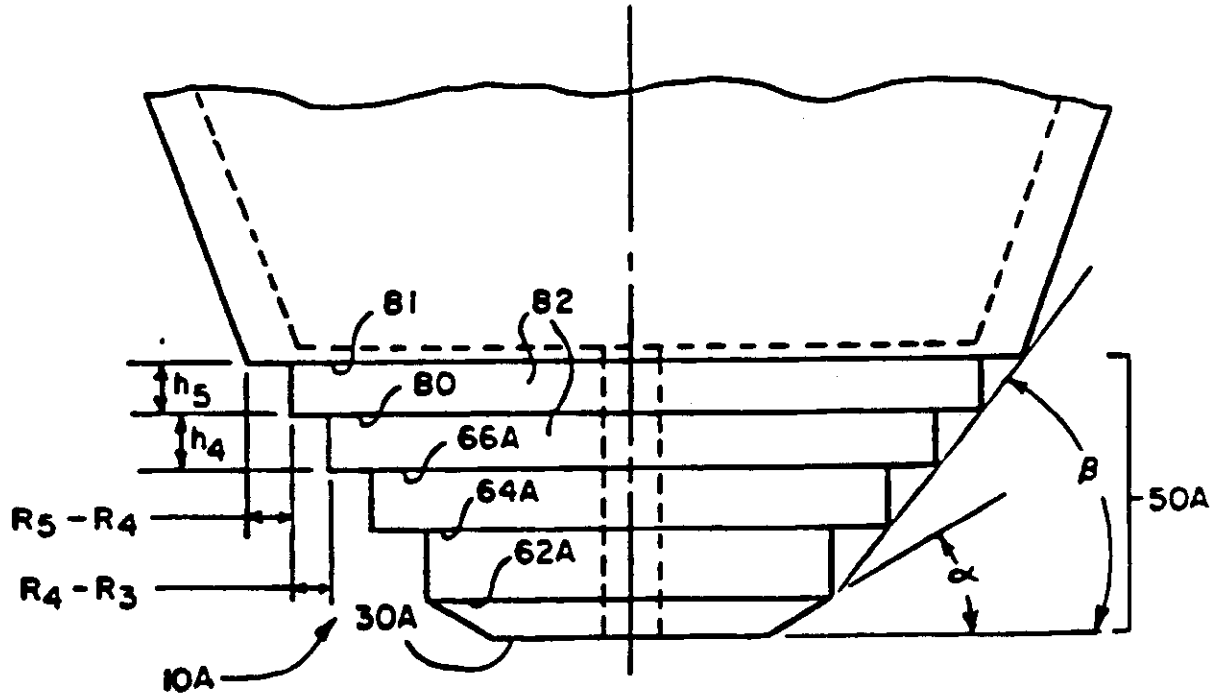
81
82
h5
80
h4
66A
64A
62A
β
50A
R5-R4
R4-R3
α
30A
10A

FIG. 5A

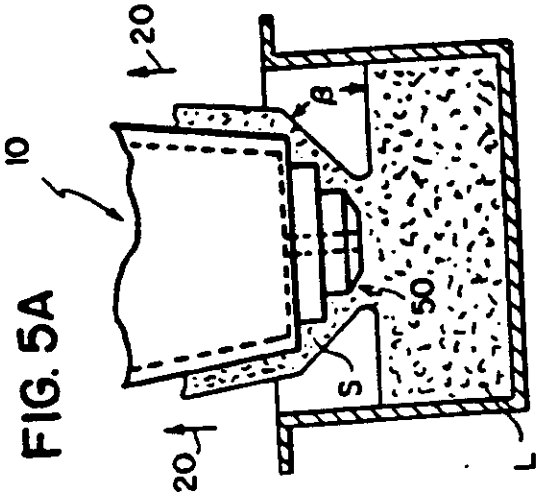

FIG. 5B

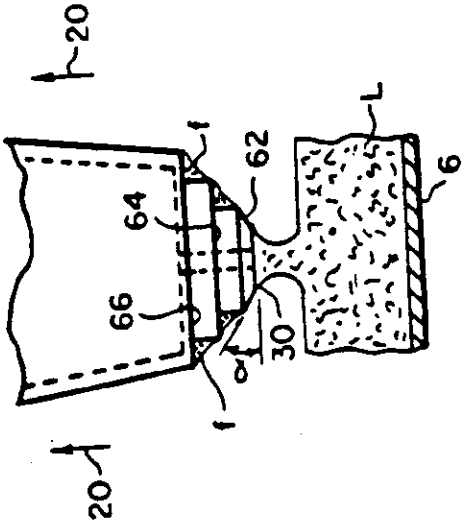

FIG. 5C

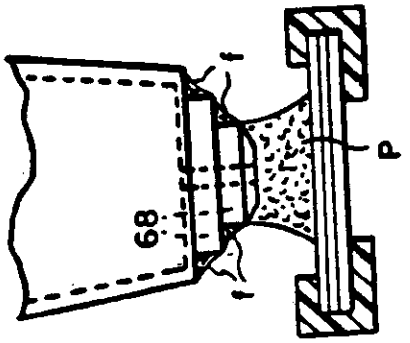

FIG. 5D

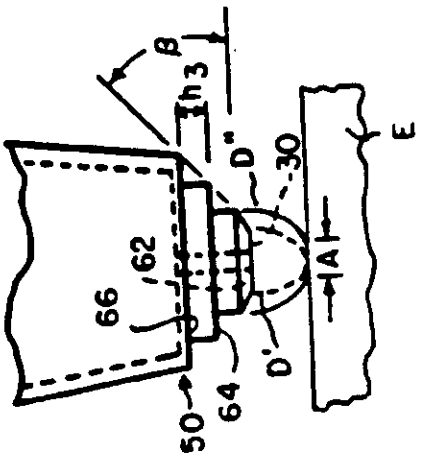

FIG. 5E

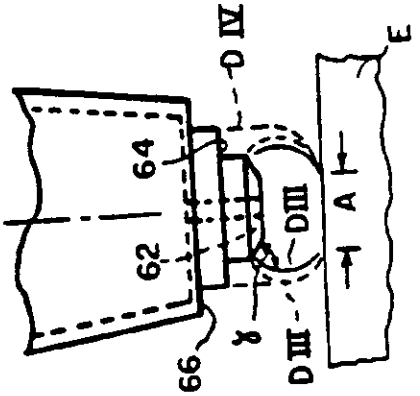

FIG. 8

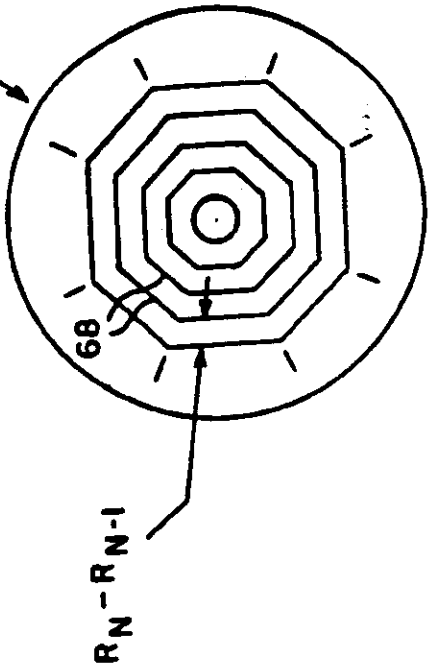

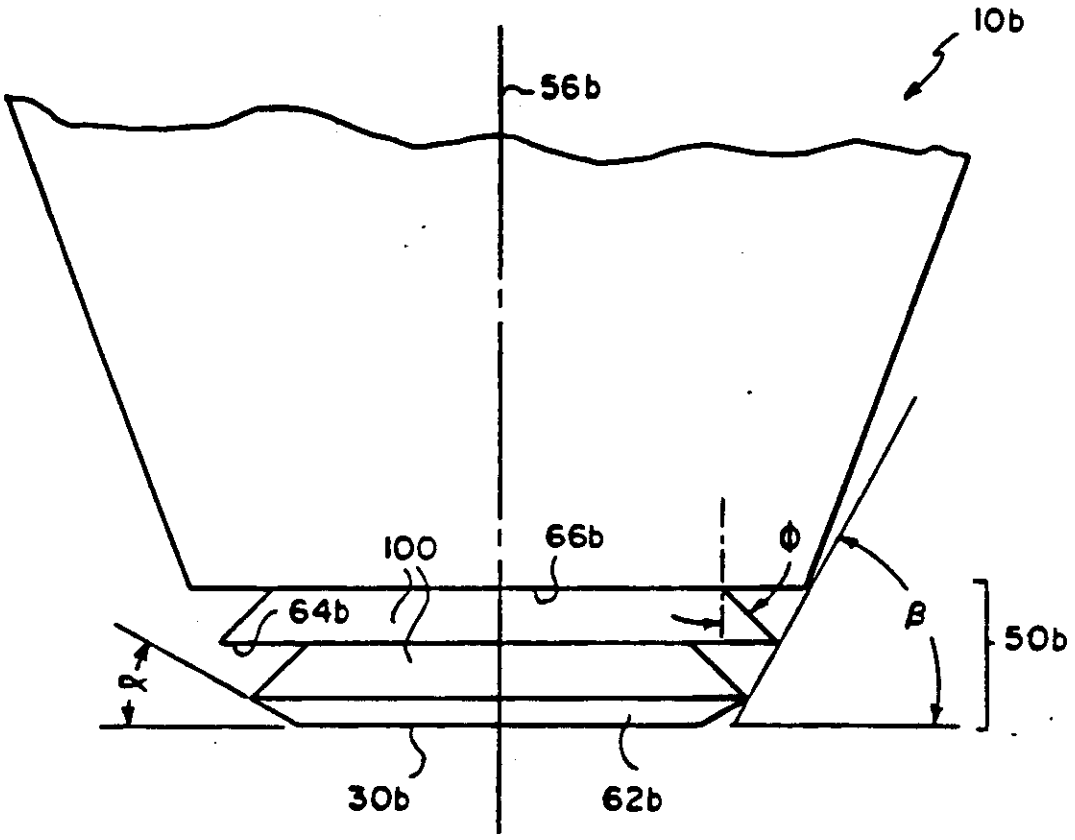

FIG. 7

REGISTER ENTRY FOR EP0383563

European Application No EP90301552.7 filing date 14.02.1990

Priority claimed:
14.02.1989 in United States of America - doc: 310151

Designated States BE CH DE FR GB IT LI LU NL

Title NOZZLE GEOMETRY FOR THE CONTROL OF LIQUID DISPENSING.

Applicant/Proprietor
EASTMAN KODAK COMPANY, 343 State Street, Rochester, New York 14650, United States of America [ADP No. 56832066001]

Inventor
RICHARD LUWIS COLUMBUS, c/o EASTMAN KODAK COMP., Patent Department, 343 State Street, Rochester, New York 14650, United States of America [ADP No. 57727398001]

Classified to
B01L

Address for Service
P A C BARON, KODAK LIMITED, Patent Department, Headstone Drive, HARROW, Middlesex, HA1 4TY, United Kingdom [ADP No. 00026443002]

EPO Representative
MARGARET DAWN PHILLIPS, Kodak Limited Patent Department Headstone Drive, Harrow, Middlesex HA1 4TY, United Kingdom [ADP No. 57283889001]

Publication No EP0383563 dated 22.08.1990
Publication in English

Examination requested 12.09.1991

Patent Granted with effect from 20.04.1994 (Section 25(1)) with title NOZZLE GEOMETRY FOR THE CONTROL OF LIQUID DISPENSING.

18.03.1991 EPO: Search report published on 17.04.1991
Entry Type 25.11 Staff ID. RD06 Auth ID. EPT

18.03.1994 Notification from EPO of change of Applicant/Proprietor details
from
EASTMAN KODAK COMPANY, 343 State Street, Rochester, New York 14650, United States of America [ADP No. 56832066001]
to
EASTMAN KODAK COMPANY, 343 State Street, Rochester, New York 14650-2201, United States of America [ADP No. 56832066001]
Entry Type 25.14 Staff ID. RD06 Auth ID. EPT

**** END OF REGISTER ENTRY ****

RENEWAL DETAILS

PUBLICATION NUMBER EP0383563

PROPRIETOR(S)

EASTMAN KODAK COMPANY, 343 State Street, Rochester, New York 14650-2201, United States of America

DATE FILED 14.02.1990

DATE GRANTED 20.04.1994

DATE NEXT RENEWAL DUE 14.02.1995

DATE NOT IN FORCE

DATE OF LAST RENEWAL

YEAR OF LAST RENEWAL 00

STATUS PATENT IN FORCE