Nov. 28, 1950 R. L. MOYER 2,531,581

INTERNAL-COMBUSTION TURBINE ENGINE

Filed March 30, 1945 3 Sheets-Sheet 1

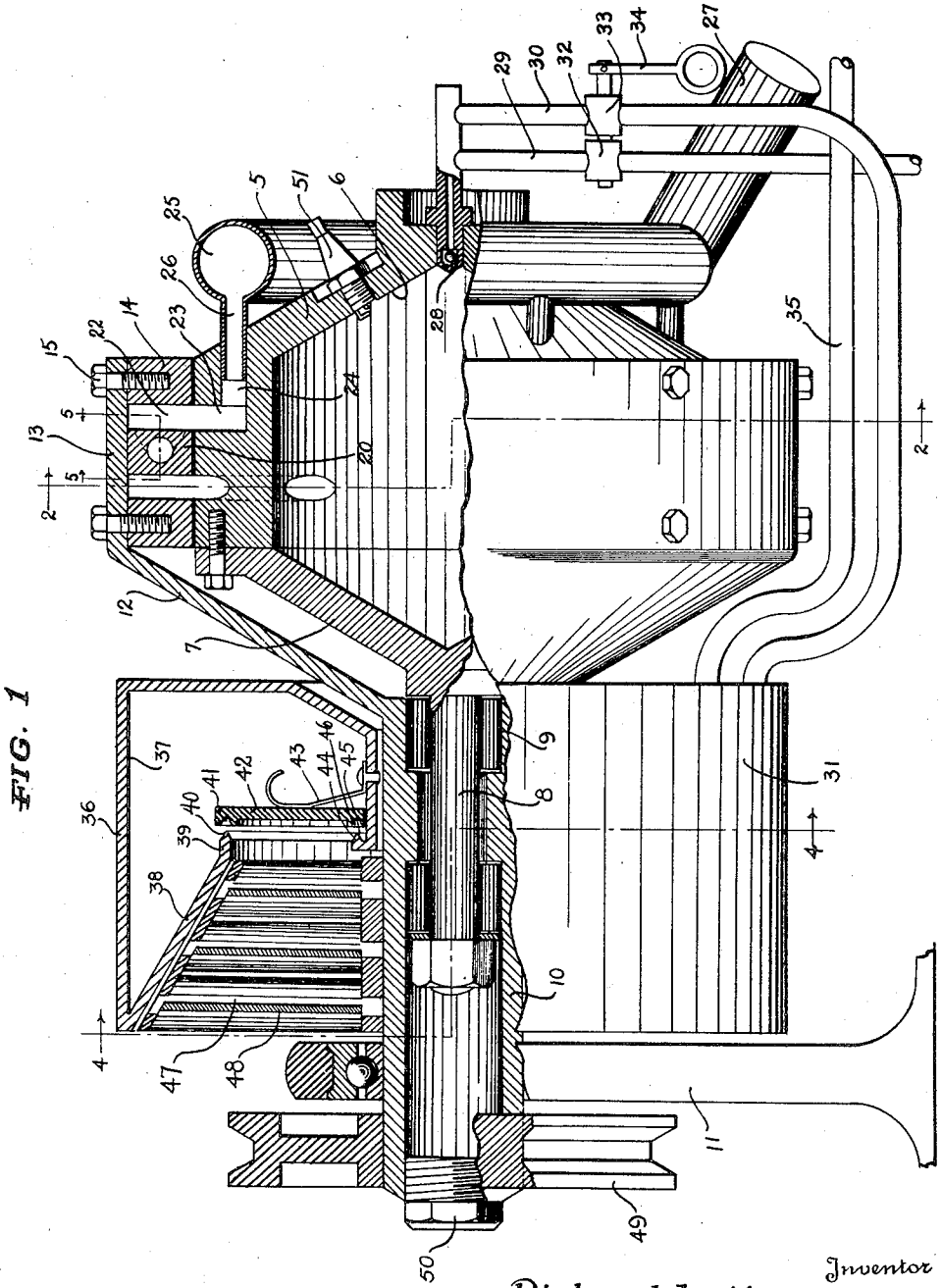

FIG. 1

Inventor

Richard L. Moyer,

By McMorrow and Berman

Attorneys

Nov. 28, 1950 R. L. MOYER 2,531,581

INTERNAL-COMBUSTION TURBINE ENGINE

Filed March 30, 1945 3 Sheets-Sheet 2

FIG. 2

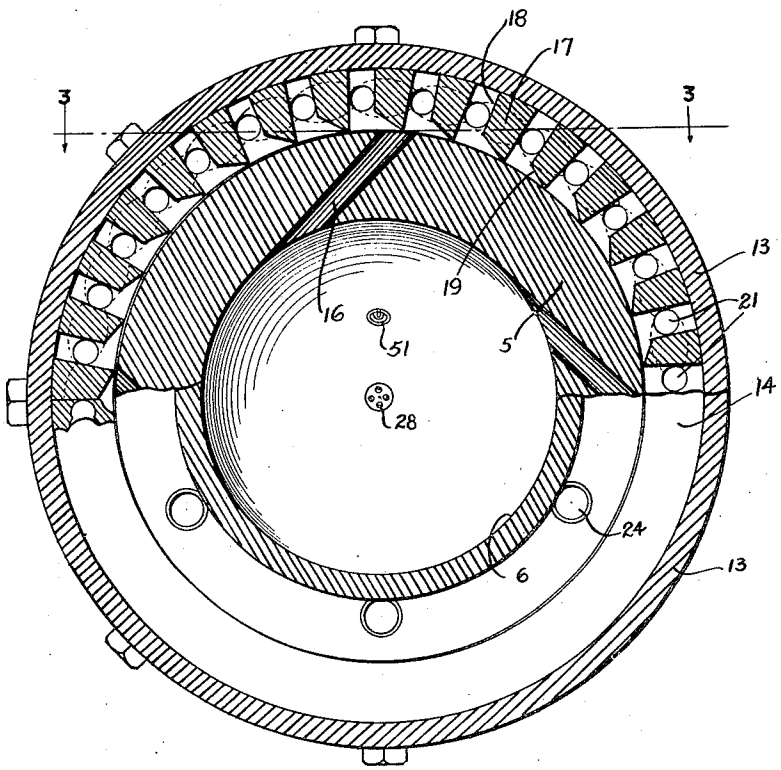

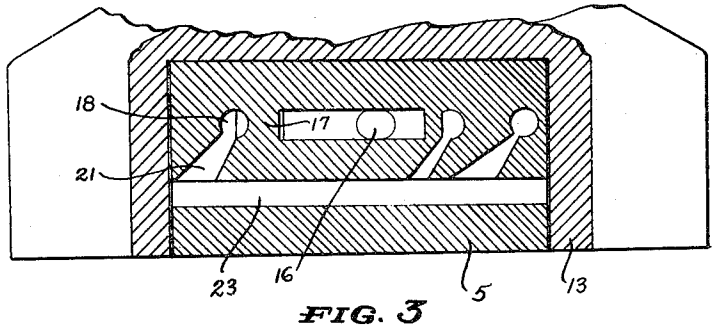

FIG. 3

Inventor
Richard L. Moyer.
By McMorrow & Berman
Attorneys

Nov. 28, 1950 R. L. MOYER 2,531,581

INTERNAL-COMBUSTION TURBINE ENGINE

Filed March 30, 1945 3 Sheets-Sheet 3

FIG. 4

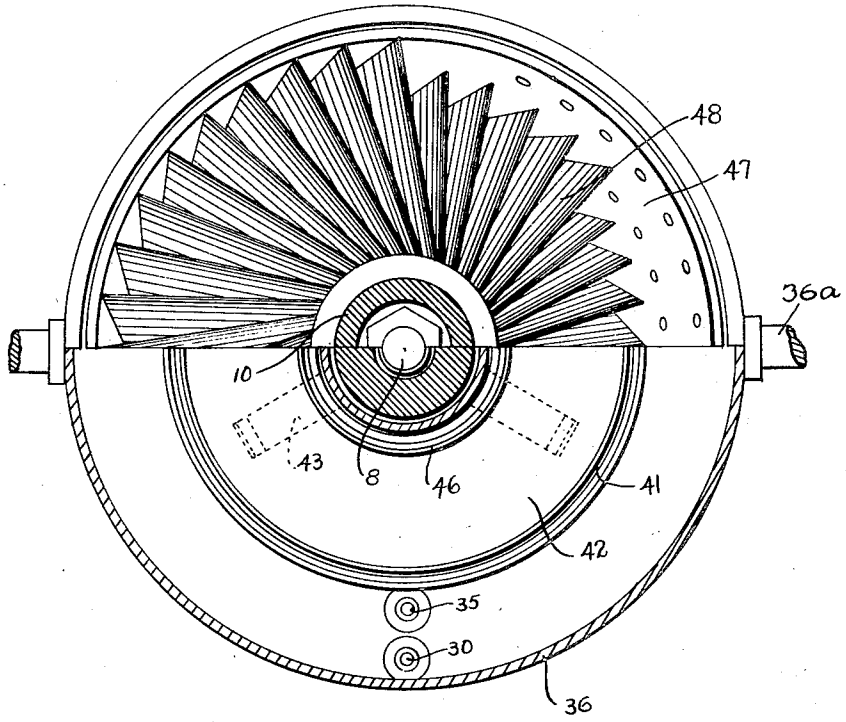

FIG. 5

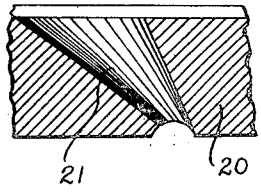

Inventor
Richard L. Moyer,
By McMorrow & Berman
Attorneys

Patented Nov. 28, 1950 2,531,581

UNITED STATES PATENT OFFICE

2,531,581

INTERNAL-COMBUSTION TURBINE ENGINE

Richard L. Moyer, Reading, Pa.

Application March 30, 1945, Serial No. 585,585

2 Claims. (Cl. 60—41)

1

The present invention relates to new and useful improvements in engines, and more particularly to a rotary engine of the turbine type adapted for operation in response to the reaction produced thereon by the explosive force resulting from the burning of a combustible fuel admitted into and ignited in a combustion chamber.

An important object of the present invention is to provide a turbine of this character which functions to obtain the desired propelling action without requiring the use of valve mechanism or other moving parts for the feeding, igniting and discharge of the products of combustion.

A still further object of the invention is to provide a unitary power plant embodying an air compressor and a turbine mounted on a single shaft and embodying a novel air compressing structure.

A still further object is to provide an apparatus of this character of simple and practical construction, which is economical in its operation, relatively inexpensive to manufacture and otherwise well adapted for the purposes for which the same is intended.

Other objects and advantages reside in the details of construction and operation as more fully hereinafter described and claimed, reference being had to the accompanying drawings forming part hereof, wherein like numerals refer to like parts throughout, and in which:

Figure 1 is a side elevational view with parts broken away and shown in section.

Figure 2 is a transverse sectional view taken substantially on a line 2—2 of Figure 1.

Figure 3 is a fragmentary sectional view taken substantially on a line 3—3 of Figure 2.

Figure 4 is a transverse sectional view of the air compressor taken on a line 4—4 of Figure 1.

Figure 5 is a fragmentary sectional view of the turbine taken substantially on a line 5—5 of Figure 1.

Referring now to the drawings in detail, wherein for the purpose of illustration I have disclosed a preferred embodiment of the invention, the numeral 5 designates an annular housing forming an internal combustion chamber 6, the side walls of the housing being of conical construction, as indicated at 7, to converge at the peripheral edge of the chamber 6.

One end of the housing 5 is supported on a suitable frame (not shown) and the other end of the housing is formed with a fixed shaft 8 carrying bearing assemblies 9 positioned in a rotatable hollow shaft 10, the shaft 10 being journaled at one end in a suitable support or frame 11.

The other end of the shaft 10 is formed with a conical member 12 terminating in its outer edge in an annular flange 13, the member 12 and flange 13 surrounding one side and the central portion of the housing 5 in spaced relation therefrom.

2

A ring 14 is secured to the inner side of the flange 13 by means of bolts or the like 15, the inner surface of the ring being positioned in substantially close rotating contact with the outer surface of the central portion of the housing 5 to form a turbine wheel surrounding the housing.

The central portion of the housing 5 is formed with a plurality of tangentially extending ports 16 extending therethrough and the ring member or turbine wheel 14 is formed with a series of radially extending turbine blades 17 spaced apart circumferentially of said ring and in radial alignment with the ports 16 so that the spaces 18 between adjacent blades communicate with the outer ends of these ports.

The inner ends of the blades 17 are beveled or inclined, as indicated at 19, to enlarge the spaces 18 at their inner ends, as will be apparent from an inspection of Figure 2 of the drawings, the angle of the beveled edges 19 being arranged to place the turbine wheel under the propelling force of gases expelled through the ports 16 to rotate the turbine.

The center of the turbine wheel 14 is formed with an annular rib 20 at one side of the blades 17, the rib being formed with a plurality of inclined tapering passages 21 which have their smaller ends communicating with the spaces 18 between the blades 17 respectively and have their wider ends in communication with an annular chamber 22 formed in the turbine wheel 14 at the opposite side of the rib 20 from the blades 17.

The chamber 22 communicates with an annular chamber 23 formed in the peripheral edge of the central portion of the housing 5, and from which a plurality of laterally extending ports 24 extend outwardly at the side of the casing for connection to an annular exhaust manifold 25 by means of the pipes 26. The manifold has an exhaust pipe 27 extending therefrom to the atmosphere.

In the outer side of the casing 5 is mounted a fuel spray nozzle 28 having a fuel pipe 29 and a compressed air pipe 30 attached thereto, the fuel pipe 29 leading from a fuel supply tank (not shown) and the air pipe 30 communicating with an air compressor designated generally at 31.

The pipes 29 and 30 have control valves 32 and 33, respectively, therein operated by a common throttle lever 34 for regulating the mixture of fuel and air admitted to the chamber 6.

A compressed air supply pipe 35 also leads from the air compressor 31 to the fuel tank for forcing the fuel under pressure through the pipe 29.

The air compressor 31 comprises a stationary annular casing 36 secured to a suitable support by members 36a and forming a chamber 37 therein having an inwardly sloping front wall 38, the front wall 38 terminating at its inner edge in an annular flange 39 having a beveled rib 40 on its inner edge adapted to seat in a V-shaped groove

41 formed on the outer face of a valve plate 42, which is freely mounted in the chamber 37 and yieldably urged in a closed position against the rib 40 by means of a plurality of lead springs 43 bearing against the rear surface of the plate.

The inner edge of the opening formed in the wall 38 is also provided with a flange 44 also having a beveled rib 45 thereon adapted for likewise seating in a V-groove 46 adjacent the inner edge of the valve plate 42, whereby to provide an air-tight seal for the opening leading to the chamber 37.

A blower designated generally at 47 is secured to the shaft 10 within the sloping wall 38 of the casing 36, the blower including a plurality of fan blades 48 arranged in groups disposed in longitudinally spaced relation along the shaft 10 and cooperating to blow air inwardly through the opening in the front wall 38 of the casing into the chamber 37, the force of the air serving to move the valve plate 42 inwardly to admit the air into the chamber 37 for compression therein.

When the shaft 10 and blower 47 are idle, the springs 43 will serve to close the valve plates 42 and thus prevent escape of the air compressed in the chamber 37.

To the outer end of the shaft 10 is attached a fly wheel pulley 49 by means of which the power generated by the engine may be utilized for any useful purpose.

A plug 50 is threaded in the outer end of the shaft 10 providing means for filling the shaft and the space between the inner side of the casing 5 and the conical member 12 with a lubricant.

A spark plug 51 is mounted in the outer wall of the casing 5 and connected to a suitable source of current to ignite the fuel admitted in the chamber by the nozzle.

In operation of the device an electric motor (not shown) may be connected to the pulley 49 for rotating the shaft 10 and blower 47, as well as the turbine wheel 14 in order to initially provide a desired pressure of air in the chamber 37.

The engine may then be started by opening the valves 32 and 33 whereby compressed air and fuel will be mixed and sprayed into the combustion chamber 6 through the spray nozzle 28 and ignited therein by the spark plug 51, and the fuel constantly burned.

The force of the burning gases being discharged through the port 16, in striking the baffles or blades 17 of the turbine wheel 14 will cause rotation of the wheel and the products of combustion will be exhausted through the passages 21 in the rib 20 into the chambers 22 and 23 and outwardly through the exhaust manifold 25 and exhaust pipe 27.

During the rotation of the turbine wheel 14, the blower 47 will be operated to maintain the desired pressure of air in the chamber 37.

It is to be understood that the form of the invention as herein shown and described is to be taken as a preferred embodiment of the same, and that various changes in shape, size and arrangement of parts may be resorted to without departing from the spirit of the invention or the scope of the appended claims.

Having thus described the invention, what I claim is:

1. An internal combustion turbine engine comprising a hollow body of circular cross sectional shape having a cylindrical peripheral surface and providing a closed combustion chamber internally thereof, said body having a series of tangentially arranged, spaced apart parts therein extending from said combustion chamber to said peripheral surface, an annular groove in said peripheral surface providing an annular chamber at one side of said series of parts, and exhaust ports leading from said groove to the exterior of said body, a fixed shaft extending from one end of said body, and air and fuel inlet nozzle in the opposite end of said body for injecting a combustible mixture into said combustion chamber, a ring surrounding the peripheral surface of said body having therein an annularly arranged series of turbine blades separated by spaces, said ring having a groove providing an annular chamber in registry with the annular chamber in said hollow body, and also having therein inclined tapering passages the smaller ends of which communicate with the spaces between said blades respectively and the larger ends of which are in communication with the annular chamber in said ring, a hollow shaft journaled upon said fixed shaft, and a conical member connecting said hollow shaft and said ring for rotation of said ring upon said hollow body.

2. An internal combustion turbine engine comprising a gas turbine and an air compressor driven by said turbine to supply combustion air to the latter, a hollow body of circular cross sectional shape having a thickened annular wall provided with a cylindrical spherical surface and providing a combustion chamber internally thereof, a cylindrical ring rotatable upon the peripheral surface of said body, a fixed shaft projecting from one end of said hollow body, a hollow shaft surrounding and journaled upon said fixed shaft, means connecting said ring to said hollow shaft, and a fuel and air nozzle mounted in said hollow body to inject a combustible mixture into said combustion chamber, the annular wall of said hollow body having tangentially disposed parts therethrough leading from said combustion chamber to the exterior of said annular wall and an annular chamber therein with said chamber opening to said peripheral surface and connected by exhaust ports to the external surface of said body, and said ring having angularly spaced turbine blades therein in alignment with said jet passages and an annular chamber spaced from said blades and communicating with the annular chamber in said hollow body, said annular chamber in said ring being separated from said blades by an annular rib having inclined, tapered passages extending therethrough which passages communicate at their smaller ends respectively with the spaces between adjacent turbine blades and at their larger ends with the annular chamber in said ring.

RICHARD L. MOYER.

REFERENCES CITED

The following references are of record in the file of this patent:

UNITED STATES PATENTS

Number	Name	Date
1,854,615	Lasley	Apr. 19, 1932
2,112,672	Lasley	Mar. 29, 1938
2,318,905	Traupel	May 11, 1943
2,323,617	Osborne	July 6, 1943
2,358,301	Brauns	Sept. 19, 1944
2,383,004	Mader	Aug. 21, 1945

FOREIGN PATENTS

Number	Country	Date
23,740	Great Britain	of 1895
665,609	France	Sept. 20, 1929